ALTO TREVIGIANO SERVIZI S.r.l.

MONTEBELLUNA

ALTO TREVIGIANO SERVIZI

REALIZZAZIONE DI FOGNATURA NERA IN ATTRAVERSAMENTO DEL FIUME SILE E DELLA LINEA FERROVIARIA TREVISO-UDINE A RIDOSSO DI PONTE DELLA GOBBA IN COMUNE DI TREVISO

PROGETTO DEFINITIVO-ESECUTIVO

Tavola n.	
R19.01	**RELAZIONE STRUTTURALE E FASCICOLO DEI CALCOLI CARPENTERIA IMPALCATO**

ALTO TREVIGIANO SERVIZI S.R.L.

ALTO TREVIGIANO SERVIZI

DIRETTORE - ing. Roberto Durigon

via Schiavonesca Priula, 86 - 31044 Montebelluna (TV)

Servizio Tecnico: UFFICIO NUOVE OPERE
tel. 0423-2928
fax 0423-292929
info@altotrevigianoservizi.it

PROGETTAZIONE

ENKI INGEGNERIA

ing. Andrea Mazzetti - Enki s.r.l.

viale G.B. Lulli, 62 - 50144 Firenze
T. 055.3247209
info@enki.it

Data:	Aggiornato:	Codice Piano d'Ambito:	Codice commessa:
Novembre 2021	00	-	-

SOMMARIO RELAZIONE TECNICA GENERALE E STRUTTURALE

INDICE FIGURE E TABELLE RELAZIONE TECNICA

RELAZIONE TECNICA GENERALE - RELAZIONE GEOTECNICA E SULLE FONDAZIONI - RELAZIONE DI CALCOLO E FASCICOLO DEI CALCOLI

Relazione di calcolo strutturale impostata e redatta secondo le modalità previste nel D.M. 17 Gennaio 2018 cap. 10 "Redazione dei progetti strutturali esecutivi e delle relazioni di calcolo"

1 INTRODUZIONE

1.1 PREMESSA

La presente relazione di calcolo strutturale, in conformità al punto §10.1 del DM 17/01/18, è comprensiva di una descrizione generale dell'opera e dei criteri generali di analisi e verifica.

Seguono inoltre le indicazioni fornite al §10.2 del DM stesso per quanto concerne analisi e verifiche svolte con l'ausilio di codici di calcolo.

Nella presente parte sono riportati i principali elementi di inquadramento del progetto esecutivo riguardante le strutture di fondazione ed in elevazione.

1.2 DESCRIZIONE GENERALE DELL'OPERA

Il manufatto in oggetto è relativo alla realizzazione di un nuovo ponticello carrabile con giacitura limitrofa e parallelo a ponte metallico esistente.

Il nuovo manufatto, il cui uso è asservito unicamente al transito di mezzi per l'ingresso in area SIED, è caratterizzato da una carreggiata complessiva di 4 m per la sede di 1 corsia di marcia di 3.75 m.

La sezione è completata dalla presenza ai lati di un cordolo di 25 cm come sede per il per il parapetto di sicurezza.

Nel seguito, si riportano le principali caratteristiche geometriche, costruttive e statiche, di cui:

- **TRAVI PREFABBRICATE**

  L'impalcato è costituito sostanzialmente da 5 travi in C.A.P. accostate di sezione costante 40x70 cm, poste ad interasse pari a 0.80/0.85 m.

  Lo schema di calcolo è quello di trave isostatica su due appoggi, la luce di calcolo è pari a 12.00m pari alla distanza tra gli appoggi.

  Sopra alle travi è previsto un getto integrativo collaborante di calcestruzzo per uno spessore pari a 20 cm.

- **SOLETTA D'IMPALCATO GETTA IN OPERA**

  La soletta in c.a. ordinario, di spessore costante pari a 20 cm, ha pendenza trasversale nulla. Il getto della soletta d'impalcato avviene a completamento all'estradosso delle travi prefabbricate.

Lo spessore medio della soletta, incluso quello delle travi prefabbricate conduce quindi ad una altezza strutturale complessiva della sezione pari a 0.40 + 0.20 = 0.60 m.

Complessivamente la larghezza dell'impalcato è pari a 4.00 m, corrispondenti a 3.75 m di carreggiata.

La piattaforma è completata dalla presenza ai lati di un cordolo di 25 cm come sede per il per il parapetto di sicurezza.

La soletta è resa collaborante alle sottostanti travi prefabbricate mediante staffe emergenti all'estradosso superiore delle travi.

La strada è resa percorribile da carichi di prima categoria Q1k in corrispondenza di corsia di 3.00 m, coerentemente con le prescrizioni di cui al NTC18.

La soletta in calcestruzzo armato collaborante con le travi garantisce la ripartizione dei carichi alle travi dell'impalcato in esame.

Per quanto riguarda il regime statico della soletta in c.a., si individuano due distinti schemi statici:

- Prima fase: sono attive soltanto le travi prefabbricate, di luce pari a 12.00 m. Il carico di progetto, in questa fase, è il peso proprio della trave prefabbricata ed il getto integrativo. Lo spessore complessivo della soletta è pari a 20 cm.
- Seconda fase: la soletta è interamente reagente come trave su due appoggi. I carichi agenti sono i permanenti portati e i carichi mobili.

– **SOTTOSTRUTTURE: SPALLE**

Le sottostrutture del ponticello sono costituite da spalle sismo-resistenti in c.a. ordinario su microplai, per la cui verifica geotecnica fondazionale si rimanda a specifico elaborato.

Le spalle presentano una sede di appoggio larga 160 cm in cui alloggiare le travi prefabbricate. A tergo è previsto un muro paraghiaia di spessore 45 cm che delimita la zona di appoggio. La spalla risulta rastremata nella sezione di base con larghezza 160 cm.

Nelle zone di estremità sono previsti dei muri di risvolto opportunamente sagomati.

– **APPOGGI**

Gli apparecchi d'appoggio sono ubicati sulle spalle e realizzati in neoprene armato.

Relativamente alla modellazione delle sovrastrutture per la quantificazione delle sollecitazioni trasmesse in fondazione, le stesse sono state compiutamente modellate ad elementi finiti, considerando un completo modello strutturale.

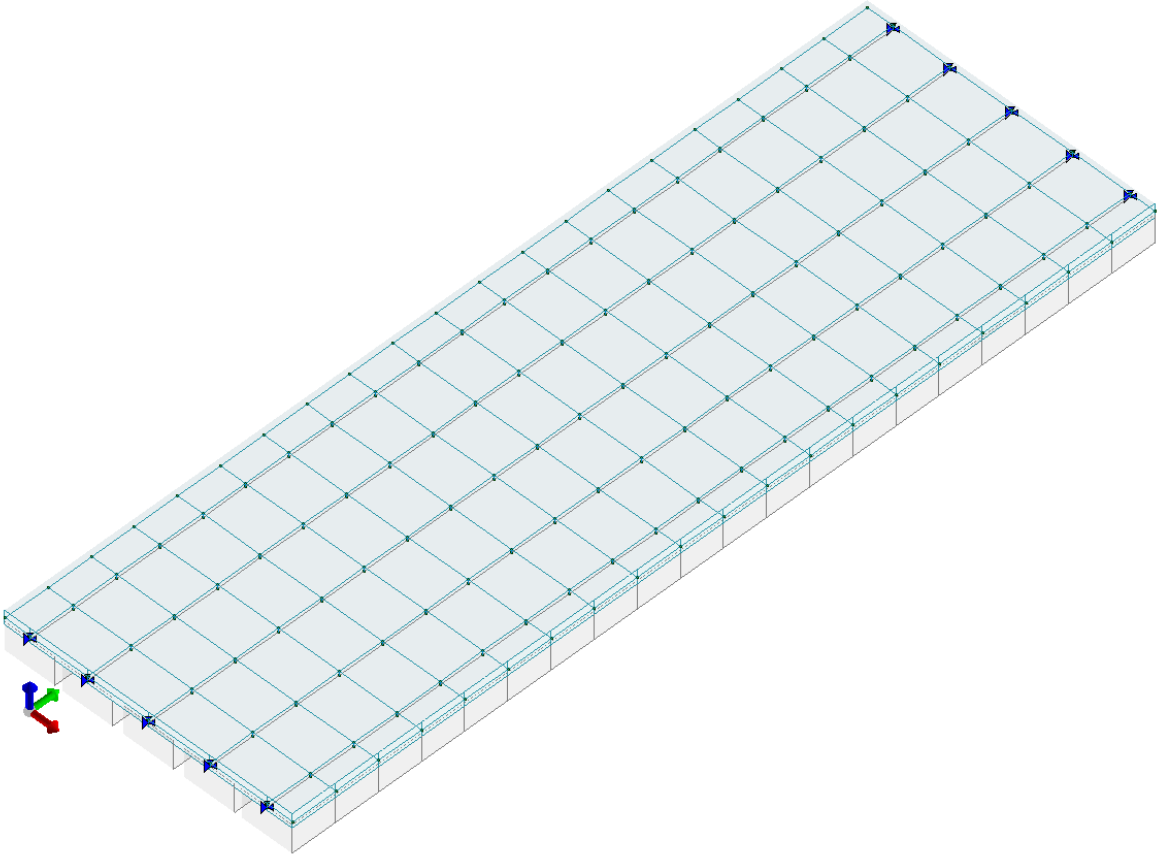

Figura 1-1: Modello strutturale 3D FEM

SEZIONE TRASVERSALE DI IMPALCATO (sez. B-B) - scala 1:50

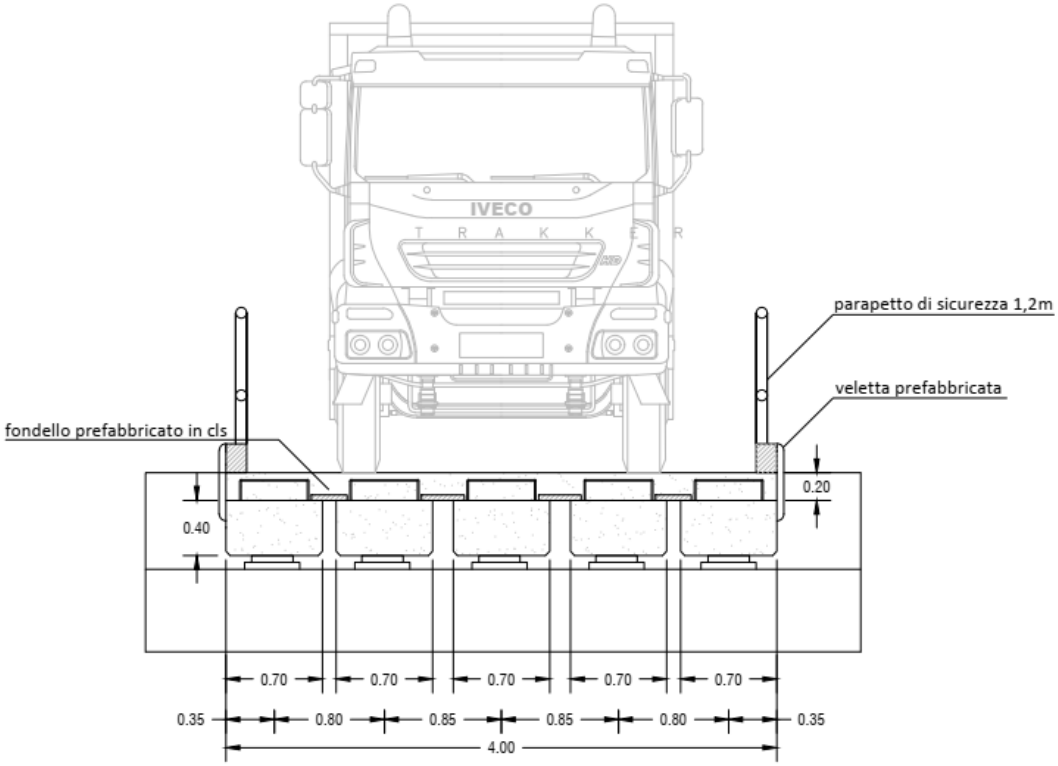

Figura 1-2: Dettaglio strutturale – sezione impalcato + soletta

1.3 QUADRO NORMATIVO DI RIFERIMENTO ADOTTATO

Le norme ed i documenti assunti quale riferimento per la progettazione strutturale vengono riportati in dettaglio al paragrafo dei riferimenti Bibliografici e Normativi, oltre a speditivo elenco:

1. **Legge n. 1086 del 05.11.1971**

   Norme per la disciplina delle opere di conglomerato cementizio armato, normale e precompresso ed a struttura metallica

2. **Legge n. 64 del 02.02.1974**

   Provvedimenti per le costruzioni con particolari prescrizioni per le zone sismiche

3. D.M. Infrastrutture 17 gennaio 2018

   Norme tecniche per le costruzioni

4. **Circolare 21 gennaio 2019 n. 7**

   Istruzioni per l'applicazione dell'«Aggiornamento delle "Norme tecniche per le costruzioni"» di cui al D.M. 17 gennaio 2018

5. **UNI EN 1993-1-1 – Eurocodice 3**

   Progettazione delle strutture di acciaio - Parte 1-1: Regole generali, regole comuni e regole per gli edifici

6. **UNI EN 1993-1-5 – Eurocodice 3**

   Progettazione delle strutture di acciaio - Parte 1-5: Elementi strutturali a lastra

7. **UNI EN 1993-1-8 – Eurocodice 3**

   Progettazione delle strutture di acciaio - Parte 1-8: Progetto dei giunti

8. UNI EN 1995-1-1 – Eurocodice 5

   Progettazione delle strutture di legno - Parte 1-1: Regole generali - Regole comuni e regole per gli edifici

9. UNI EN 1995-1-2 – Eurocodice 5

   Progettazione delle strutture di legno - Parte 1-2: Regole generali – Progettazione strutturale contro l'incendio

10. UNI EN 338

    Legno strutturale classi di resistenza

11. UNI EN 14080

    Strutture di legno - Legno lamellare incollato e legno massiccio incollato - Requisiti

12. **UNI EN 10025**

    Prodotti laminati a caldo per impieghi strutturale

Tabella 1-1: Normativa utilizzata per lo svolgimento della analisi

Progetto-verifica degli elementi	
Progetto C.A.	D.M. 17-01-2018
Progetto ACCIAIO	D.M. 17-01-2018
Azione sismica	
Norma applicata per l'azione sismica	D.M. 17-01-2018
Vento - Neve	
Sollecitazione vento e neve	D.M. 17-01-2018

2 CARATTERISTICHE DELL'OPERA

2.1 VITA NOMINALE, CLASSE D'USO E PERIODO DI RIFERIMENTO DELL'AZIONE SISMICA (§ 2.4 NTC)

La vita nominale di un'opera strutturale (VN) è intesa come il numero di anni nel quale la struttura, purché soggetta alla manutenzione ordinaria, deve potere essere usata per lo scopo al quale è destinata.

La vita nominale dei diversi tipi di opere è quella riportata nella tabella sottostante:

Tabella 2-1: Vita nominale opera

Tipi di costruzione		Vita Nominale V_N (in anni)
1	Opere provvisorie – Opere provvisionali - Strutture in fase costruttiva	≤ 10
2	Opere ordinarie, ponti, opere infrastrutturali e dighe di dimensioni contenute o di importanza normale	50
3	Grandi opere, ponti, opere infrastrutturali e dighe di grandi dimensioni o di importanza strategica	100

In presenza di azioni sismiche, con riferimento alle conseguenze di una interruzione di operatività o di un eventuale collasso, le costruzioni sono suddivise in classi d'uso così definite:

Tabella 2-2: Classificazione delle costruzioni

Classi d'uso	Descrizione
Classe I	Costruzioni con presenza solo occasionale di persone, edifici agricoli.
Classe II	Costruzioni il cui uso preveda normali affollamenti, senza contenuti pericolosi per l'ambiente e senza funzioni pubbliche e sociali essenziali. Industrie con attività non pericolose per l'ambiente. Ponti, opere infrastrutturali, reti viarie non ricadenti in Classe d'uso *III* o in Classe d'uso *IV*, reti ferroviarie la cui interruzione non provochi situazioni di emergenza. Dighe il cui collasso non provochi conseguenze rilevanti.
Classe III	Costruzioni il cui uso preveda affollamenti significativi. Industrie con attività pericolose per l'ambiente. Reti viarie extraurbane non ricadenti in Classe d'uso *IV*. Ponti e reti ferroviarie la cui interruzione provochi situazioni di emergenza. Dighe rilevanti per le conseguenze di un loro eventuale collasso.
Classe IV	Costruzioni con funzioni pubbliche o strategiche importanti, anche con riferimento alla gestione della protezione civile in caso di calamità. Industrie con attività particolarmente pericolose per l'ambiente. Reti viarie di tipo A o B, di cui al D.M. 5 novembre 2001, n. 6792, "Norme funzionali e geometriche per la costruzione delle strade", e di tipo C quando appartenenti ad itinerari di collegamento tra capoluoghi di provincia non altresì serviti da strade di tipo A o B. Ponti e reti ferroviarie di importanza critica per il mantenimento delle vie di comunicazione, particolarmente dopo un evento sismico. Dighe connesse al funzionamento di acquedotti e a impianti di produzione di energia elettrica.

Le azioni sismiche su ciascuna costruzione vengono valutate in relazione ad un periodo di

riferimento VR che si ricava, per ciascun tipo di costruzione, moltiplicandone la vita nominale VN per il coefficiente d'uso CU (§2.4.3 NTC 2018):

$$VR = VN \times CU$$

Il valore del coefficiente d'uso CU è definito, al variare della classe d'uso, come mostrato nella tabella sottostante.

Tabella 2-3: Coefficiente Cu

Classi d'uso	I	II	III	IV
Coefficiente C_u	0.7	1.0	1.5	2.0

Nel caso specifico la costruzione ha livelli di prestazione ordinari, mentre per la destinazione d'uso ricade in Classe d'uso III (affollamenti significativi), per cui si ha:

Tabella 2-4: Abaco parametri riferimento

Parametro	Valore
Classe d'uso	**III**
Vita nominale V_N	**50 anni**
Coefficiente d'uso C_u	**1,00**
Periodo di riferimento per l'azione sismica, $V_R=V_N \times C_U$	**50 anni**

2.2 VALUTAZIONE DELLA SICUREZZA

La valutazione della sicurezza e la progettazione di nuove costruzioni deve essere eseguita con riferimento agli stati limite ultimi SLU e agli stati limite di esercizio SLE.

In presenza di azioni sismiche, i requisiti di sicurezza relativi agli SLU possono essere ritenuti soddisfatti qualora siano eseguite le verifiche rispetto alla condizione di salvaguardia della vita umana (SLV); i requisiti di sicurezza relativi agli SLE possono essere ritenuti soddisfatti qualora siano eseguite le verifiche rispetto alla condizione di danno (SLD) e operatività (SLO).

In particolare, per le costruzioni di classe III e IV la deformabilità della struttura sotto le azioni sismiche dovrà essere contenuta secondo i limiti indicati dalla norma (7.3.6.1 NTC 2018) ridotti di 2/3, sotto le azioni sismiche di progetto relative allo SLO.

2.2.1 CRITERI DI VERIFICA

La valutazione della sicurezza viene eseguita mediante il metodo semiprobabilistico agli stati

limite basato sull'impiego dei coefficienti parziali di sicurezza.

Nel metodo semiprobabilistico agli stati limite, la sicurezza strutturale viene verificata tramite il confronto tra la resistenza e l'effetto delle azioni. Per la sicurezza strutturale, la resistenza dei materiali e le azioni sono rappresentate dai valori caratteristici, Rki e Fki definiti, rispettivamente, come il frattile inferiore delle resistenze e il frattile (superiore o inferiore) delle azioni che minimizzano la sicurezza.

In genere, i frattili sono assunti pari al 5%. Per le grandezze con piccoli coefficienti di variazione, ovvero per grandezze che non riguardino univocamente resistenze o azioni, si possono considerare frattili al 50% (valori mediani).

Per la sicurezza di opere e sistemi geotecnici, i valori caratteristici dei parametri fisico-meccanici dei terreni sono definiti al 6.2.2 NTC 2018.

La verifica della sicurezza nei riguardi degli stati limite ultimi di resistenza si effettua con il "metodo dei coefficienti parziali di sicurezza" espresso dalla equazione formale:

$$Rd \geq Ed$$

dove:

- Rd è la resistenza di progetto, valutata in base ai valori di progetto della resistenza dei materiali e ai valori nominali delle grandezze geometriche interessate;
- Ed è il valore di progetto dell'effetto delle azioni, valutato in base ai valori di progetto

I coefficienti parziali di sicurezza γMi e γFj, associati rispettivamente al materiale i-esimo e all'azione j-esima, tengono in conto la variabilità delle rispettive grandezze e le incertezze relative alle tolleranze geometriche e all'affidabilità del modello di calcolo.

La verifica della sicurezza nei riguardi degli stati limite di esercizio si esprime controllando aspetti di funzionalità e stato tensionale.

Le opere strutturali verranno verificate:

- per gli stati limite ultimi che possono presentarsi, in conseguenza alle diverse combinazioni delle azioni;
- per gli stati limite di esercizio definiti in relazione alle prestazioni attese;
- quando necessario, nei confronti degli effetti derivanti dalle azioni termiche connesse con lo sviluppo di un incendio.

2.2.2 GENERALITÀ

Si definisce stato limite (SL) uno stato superato il quale la struttura (o uno dei suoi elementi costitutivi) non è più in grado di soddisfare i requisiti richiesti dalla sua destinazione d'uso (secondo gli standard della nuova normativa sismica).

La valutazione del livello di sicurezza strutturale è svolta conducendo le verifiche nei riguardi degli stati limite ultimi (SLU) e degli stati limite di esercizio (SLE).

In presenza di sisma, inoltre, si considerano ulteriori Stati Limite, le cui definizioni sono date nel seguito.

Gli specifici stati limite da sottoporre a verifica sono indicati dalla vigente normativa in considerazione del tipo di struttura e di materiali in esame.

Le azioni sulla costruzione sono cumulate in modo da determinare condizioni di carico tali da risultare più sfavorevoli ai fini delle singole verifiche, tenendo conto della probabilità ridotta di intervento simultaneo di tutte le azioni con i rispettivi valori più sfavorevoli, come consentito dalle norme vigenti.

2.2.3 STATI LIMITE IN ASSENZA DI AZIONI SISMICHE

2.2.3.1 STATI LIMITE ULTIMI (§2.2.1 NTC)

Gli stati limite ultimi (SLU) sono associati al collasso della struttura o di sue parti, oppure ad altre forme simili di guasto strutturale. Generalmente, gli SLU riguardano la sicurezza delle persone e della struttura.

Nel caso in esame sono stati considerati i seguenti SLU:

- spostamenti o deformazioni eccessive;
- raggiungimento della massima capacità di resistenza di parti di strutture, collegamenti;
- raggiungimento della massima capacità di resistenza della struttura nel suo insieme;
- instabilità di parti della struttura o del suo insieme.

2.2.3.2 STATI LIMITE DI ESERCIZIO (§2.2.2 NTC)

Gli stati limite di esercizio (SLE) corrispondono a condizioni oltre le quali i requisiti funzionali specificati per una struttura o un elemento strutturale non sono più soddisfatti. Solitamente, gli SLE concernono il funzionamento della struttura o degli elementi strutturali in condizioni di esercizio normale, il comfort delle persone, l'aspetto delle costruzioni.

Nel caso in esame sono stati considerati i seguenti SLE:

- danneggiamenti locali che possano ridurre la durabilità della struttura, la sua efficienza o il suo aspetto;
- spostamenti e deformazioni che possano limitare l'uso, l'efficienza e l'aspetto della costruzione, di elementi non strutturali, impianti, macchinari;
- vibrazioni, al fine di assicurare che le sensazioni percepite dagli utenti garantiscano accettabili livelli di comfort.

La condizione di verifica si esplica nel controllo delle seguenti disuguaglianze:

$$Cd \geq Ed$$

dove:

- Ed è l'effetto di progetto delle azioni in termini di spostamento;
- Cd è un valore funzione di certi requisiti o proprietà assegnate alla struttura.

2.2.4 STATI LIMITE IN PRESENZA DI AZIONI SISMICHE

Poiché la costruzione in oggetto ricade in zona dichiarata sismica, agli stati limite sopra considerati se ne aggiungono altri prescritti dalle norme vigenti allo scopo di assicurare che in caso di evento sismico sia protetta la vita umana, siano limitati i danni e rimangano funzionanti le strutture essenziali agli interventi di protezione civile.

Per ciascuno degli stati limite considerati viene associata una probabilità di superamento nel periodo di riferimento PVR (Tab. 3.2.I. NTC 2018).

2.2.4.1 STATO LIMITE DI PREVENZIONE DEL COLLASSO (STATO LIMITE ULTIMO: SLC)

A seguito del terremoto la costruzione subisce gravi rotture e crolli dei componenti non strutturali ed impiantistici e danni molto gravi dei componenti strutturali; la costruzione conserva ancora un margine di sicurezza per azioni verticali ed un esiguo margine di sicurezza nei confronti del collasso per azioni orizzontali.

2.2.4.2 STATO LIMITE DI SALVAGUARDIA DELLA VITA (STATO LIMITE ULTIMO: SLV)

A seguito del terremoto la costruzione subisce rotture e crolli dei componenti non strutturali ed impiantistici e significativi danni dei componenti strutturali cui si associa una perdita significativa di rigidezza nei confronti delle azioni orizzontali; la costruzione conserva invece una parte della resistenza e rigidezza per azioni verticali e un margine di sicurezza nei confronti del collasso per azioni sismiche orizzontali.

2.2.4.3 STATO LIMITE DI DANNO (STATO LIMITE DI SERVIZIO: SLD)

A seguito del terremoto la costruzione nel suo complesso, includendo gli elementi strutturali, quelli non strutturali, le apparecchiature rilevanti alla sua funzione, subisce danni tali da non mettere a rischio gli utenti e da non compromettere significativamente la capacità di resistenza e di rigidezza nei confronti delle azioni verticali e orizzontali, mantenendosi immediatamente utilizzabile pur nell'interruzione d'uso di parte delle apparecchiature.

2.2.4.4 STATO LIMITE DI OPERATIVITÀ (STATO LIMITE DI SERVIZIO: SLO)

A seguito del terremoto la costruzione nel suo complesso, includendo gli elementi strutturali, quelli non strutturali, le apparecchiature rilevanti alla sua funzione, non deve subire danni ed interruzioni d'uso significativi;

Le verifiche di sicurezza effettuate in presenza di azione sismica per le strutture in di nuova realizzazione sono di seguito riassunte:

- Stato limite ultimo - SLV
  - Resistenza delle strutture
- Stato limite di servizio – SLE
  - Stati tensionali

2.2.5 OBIETTIVI E METODI

Per valutare il livello di sicurezza delle opere in oggetto, è stato eseguito il calcolo strutturale allo scopo di stabilire, attraverso un procedimento quantitativo, se la costruzione sia in grado o meno di resistere alle azioni cui è, o potrà essere, sottoposta durante la sua vita utile, compatibilmente con i requisiti di esercizio ed in modo che ne sia assicurata la durabilità.

Il calcolo è stato condotto attraverso le seguenti fasi:

A. schematizzazione del problema strutturale:
- definizione delle azioni agenti sulla costruzione, ivi compresa quella sismica, in considerazione di: destinazione d'uso, esigenze funzionali, ubicazione geografica, zonizzazione sismica, suolo di fondazione, esigenze del Committente etc.;
- definizione degli stati limite da sottoporre a verifica.

B. definizione dei modelli di calcolo:
- modellazione della struttura, dei vincoli e dei materiali;
- modellazione delle azioni.

C. analisi del modello col metodo degli elementi finiti;
- analisi elastica lineare per le azioni non sismiche;
- analisi dinamica lineare con spettro di risposta in presenza di azioni sismiche.

D. controllo dei risultati e verifiche di resistenza:
- controllo generale dei risultati del calcolo e confronto dei singoli risultati con calcoli eseguiti con metodi alternativi;
- verifiche di sicurezza degli elementi strutturali.

2.2.6 SVOLGIMENTO DELLE VERIFICHE DI PROGETTO

Le verifiche statiche saranno svolte con riferimento al metodo degli stati limite.

La tipologia strutturale dell'impalcato in oggetto, trave in semplice appoggio su sottostruttura scatolare

Trattandosi, nel funzionamento globale dell'impalcato, di un sistema misto calcestruzzo, per le azioni agenti vengono, normalmente, suddivise in tre fasi, corrispondenti al grado di maturazione del getto di calcestruzzo e quindi ai diversi livelli di rigidezza e caratteristiche statiche delle sezioni.

- **Fase 0**: si considera il peso proprio delle strutture prefabbricate e la precompressione. La sezione resistente corrisponde alla sola parte prefabbricata.
- **Fase 1**: si considera il peso proprio delle strutture prefabbricate e del getto della soletta che, in questa fase, non è ancora reagente. La sezione resistente corrisponde alla sola parte prefabbricata.
- **Fase 2**: considera il peso dei successivi carichi permanenti applicati alla struttura (pavimentazione, cordoli, barriere di sicurezza, etc.) e corrisponde invece ad una sezione resistente in calcestruzzo. Per tenere in considerazione i fenomeni differiti che accompagnano questa fase, imputabili alla viscosità del calcestruzzo della soletta.

  Anche gli effetti del ritiro sono da considerarsi "lenti" in quanto concomitanti agli effetti viscosi, e vengono pertanto anch'essi valutati con le caratteristiche di resistenza della sezione della fase 2. In particolare, gli effetti del ritiro vengono considerati come un'azione di trazione sulla soletta ed una azione di presso - flessione applicata all'estremità della struttura per valutarne le successive ridistribuzioni. Oltre a tali effetti saranno valutati anche gli effetti dovuti ai cedimenti differenziali delle fondazioni.
- **Fase 3**: Corrisponde alla situazione di esercizio, relativa al transito dei carichi mobili desunti in accordo con NTC 18, per cui oltre a tali effetti "istantanei" vengono computati anche gli effetti dovuti all'azione del vento, alla temperatura.

In riferimento alla tipologia, caratteristiche e dimensioni dell'opera, si ritiene dominante la verifica rispetto alla Fase 3 per cui le analisi di seguito svolte sono alle condizioni di esercizio, con carichi di tipo istantaneo, statici e sismici.

3 ANALISI DEI CARICHI

La serie di carichi insistenti sulla fondazione, dovuti alle strutture in elevazione, ai carichi accidentali, e ad altri carichi specifici, sono automaticamente computati dal software, e trasmessi alle strutture di fondazione

3.1 CARICHI PERMANENTI

I carichi permanenti sono correlati con le strutture e sono automaticamente computati dal software per la platea.

3.2 CONDIZIONI DI CARICO ELEMENTARI

Con riferimento alle prescrizioni della vigente normativa NCT 2018 “Norme Tecniche per le Costruzione DM 17/01/2018”, devono essere definite le condizioni di carico elementari, per poi procedere alla generazione delle combinazioni di carico.

3.2.1 CARICHI PERMANENTI

I carichi permanenti sono riferibili ai pesi propri strutturali e alle sovrastrutture di cui:

- peso di elementi strutturali modellati che sono automaticamente inseriti e gestiti dal software;
- peso di elementi inseriti dall’utente;

3.2.2 CARICHI VARIABILI

Relativamente ai carichi variabili gli stessi sono imputabili ai diversi carichi accidentali dei solai, al vento e neve e sono normalmente gestiti dal software.

3.2.3 G1 - PESO PROPRIO

Il software computa ed applica automaticamente i carichi dovuti al peso proprio delle travi di impalcato e della soletta collaborante

3.2.4 G2 – SOVRACCARICHI PERMANENTI

Si quantifica un sovraccarico permanente imputabile alla strato di finitura della pavimentazione ed altre opere accessorie pari a 100 daN/mq

3.2.5 VARIAZIONI TERMICHE

Per gli effetti termici, si è considerato una variazione termica pari a ΔT' = ± 15 °C costante su tutta la sezione dell'impalcato.

3.2.6 CEDIMENTI VINCOLARI

Dato il modesto sviluppo longitudinale del ponte e la distanza tra i punti di appoggio dell'impalcato, si sono stimati i cedimenti differenziali tra le pile secondo la formula.

Spalla : d_i = L / 2 ´ 1/2000 = 12.00 m / 2 ´ 1/2000 = 0.300 cm

Dato il modesto valore del cedimento differenziale si ritiene che gli effetti indotti da tale cedimento per l'impalcato sia irrilevante in quanto la struttura presenta uno schema isostatico e per tanto gli effetti tensionali sono nulli. Per quanto riguarda le strutture di fondazione, i cedimenti differenziali valutati risultano di modesta entità e per tanto trascurabili ai fini delle analisi successive.

3.2.7 Q1k – CARICHI MOBILI

I sovraccarichi accidentali, ai sensi del vigente NTC 18, sono riferibili allo SCHEMA CARICO 1, per cui si prevede un carico tandem 2Q1k di 600 kN totali dotato di 2 assi di 2 ruote ciascuno, interassati di 1.20 m in senso longitudinale e con interasse ruote in senso trasversale di 2.00 m agente su un'impronta di dimensione 40x40 cm, oltre carico di 9 kN/m2 uniformemente distribuito per l'intero ingombro della corsia di larghezza 4.00 m e per tutto lo sviluppo del ponte.

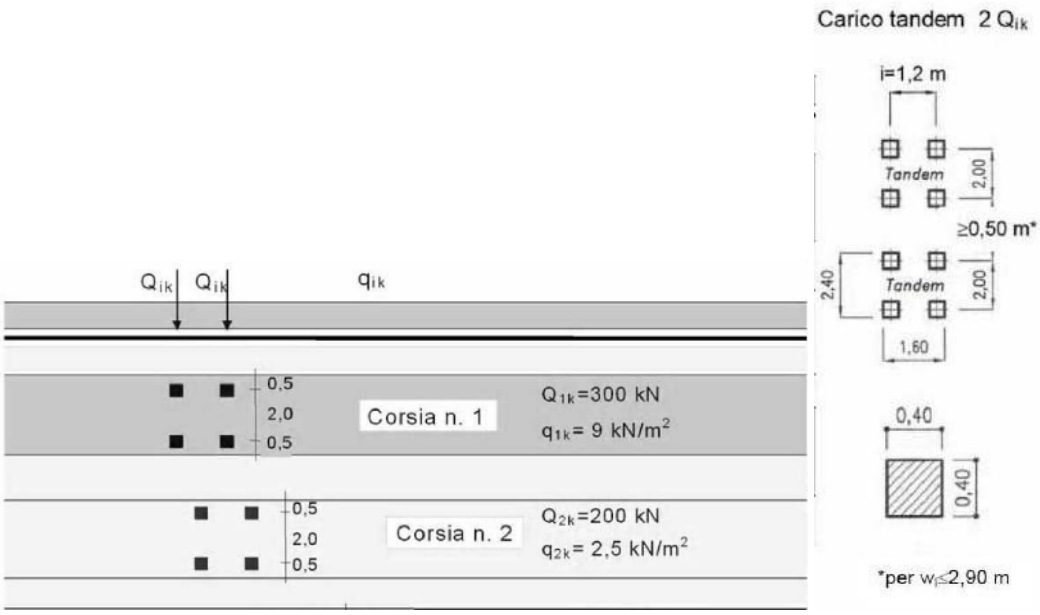

Figura 3-1: NTC2018 – SCHEMA CARICO 1 - PONTI

3.2.8 Q3 – AZIONE DI FRENAMENTO

La forza di frenatura, secondo il NTC 18, si assume agente in direzione dell'asse della strada al livello della superficie stradale. Come richiesto da normativa per i ponti di 1° cat., si valutano gli effetti dovuti alla frenatura determinando il valore come segue:

0.60 (2Q1k) + 0.10 q1k w L = 0.60 x (2 x 300 kN) + 0.10 x 9 kN/m2 x 3.00 m x 12.00 m = 392,40 kN.

La valutazione degli effetti dovuti alla frenatura sarà utilizzata in fase di determinazione degli scarichi agli appoggi.

3.2.9 Q5 - AZIONE NEVE E VENTO

LOCALIZZAZIONE DELL'INTERVENTO

Località: TREVISO
Provincia: TREVISO

Regione: VENETO

Coordinate GPS:
Latitudine : 45,66900 N
Longitudine: 12,24400 E

Altitudine s.l.m.: 15,0 m

CALCOLO DELLE AZIONI DELLA NEVE E DEL VENTO

Normativa di riferimento:
D.M. 17 gennaio 2018 - NORME TECNICHE PER LE COSTRUZIONI
Cap. 3 - AZIONI SULLE COSTRUZIONI - Par. 3.3 e 3.4

NEVE:

Zona Neve = I Mediterranea
Periodo di ritorno, Tr = 50 anni
Ctr = 1 per Tr = 50 anni
Ce (coeff. di esposizione al vento) = 1,00
Valore caratteristico del carico al suolo = qsk Ce Ctr = 150 daN/mq

<u>Copertura ad una falda:</u>

Angolo di inclinazione della falda α = 0,0°
- Falda con presenza di bariera o impedimento allo scivolamento della neve.
- Copertura piana W = 7.0 m, L = 12.0 m => Lc = 9.9, Cef = 1.000

μ1 = 0,80 => Q1 = 120 daN/mq

Schema di carico:

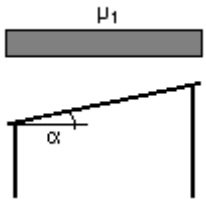

VENTO:

Zona vento = 1
Velocità base della zona, Vb.o = 25 m/s (Tab. 3.3.I)
Altitudine base della zona, Ao = 1000 m (Tab. 3.3.I)
Altitudine del sito, As = 15 m
Velocità di riferimento, Vb = 25,00 m/s (Vb = Vb.o per As ≤ Ao)
Periodo di ritorno, Tr = 50 anni
Cr = 1 per Tr = 50 anni
Velocità riferita al periodo di ritorno di progetto, Vr = Vb Cr = 25,00 m/s

Classe di rugosità del terreno: A
[Aree urbane con almeno il 15% della superficie coperta da edifici la cui altezza media superi 15 m]

Esposizione: Cat. V - Entroterra fino a 500 m di altitudine
(Kr = 0,23; Zo = 0,70 m; Zmin = 12 m)
Pressione cinetica di riferimento, qb = 39 daN/mq

Coefficiente di forma, Cp = 1,00
Coefficiente dinamico, Cd = 1,00
Coefficiente di esposizione, Ce = 1,48
Coefficiente di esposizione topografica, Ct = 1,00
Altezza dell'edificio, h = 2,00 m

Pressione del vento, p = qb Ce Cp Cd = 58 daN/mq

- **CARICO NEVE - VENTO**,

  Il software modella in maniera automatica l'applicazione del carico VENTO e NEVE sugli elementi pannelli e 3D, come di seguito riportato.

3.2.10 Q6 - DEFINIZIONE INPUT SISMICO E DEI PARAMETRI SISMICI

Per la definizione dell'input sismico di calcolo della struttura, è necessario individuare e definire i seguenti parametri:

I. Coordinate del sito;
II. Vita di riferimento Vr, pari al prodotto delle Vita nominale Vn per il coefficiente d'uso Cu di indirizzo progettuale;
III. Stati limite di progetto di riferimento, SLV ed SLD etc.. etc..

Si utilizzano le seguenti applicazioni:

- http://www.geostru.com/geoapp/parametrisismici.aspx per la determinazione delle coordinate ED50;
- Spettri-NTCver.1.0.3 per la determinazione dei valori di Ag, F0 e T*c in funzione dei diversi tempi di ritorno.

Trattandosi si un'opera di sostegno si ipotizzano le seguenti scelte progettuali:

- Vita nominale Vn = 50 anni;
- Coefficiente d'uso Cu = 1.0 pari a Classe d'uso II ai sensi §2.4.2 NTC;
- Vita riferimento Vr = 50 * 1.0 = 50 anni.

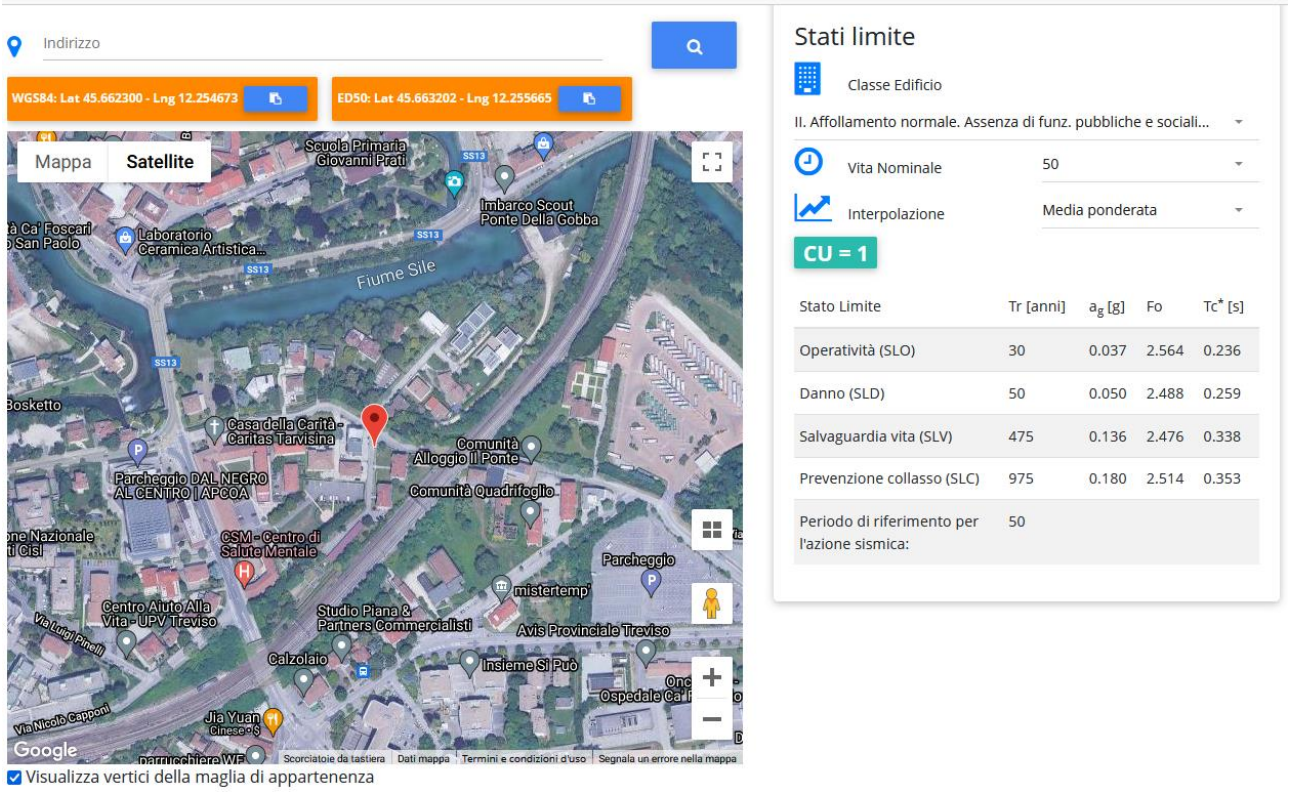

Fig. 1 : Individuazione coordinate ED50 sito di analisi

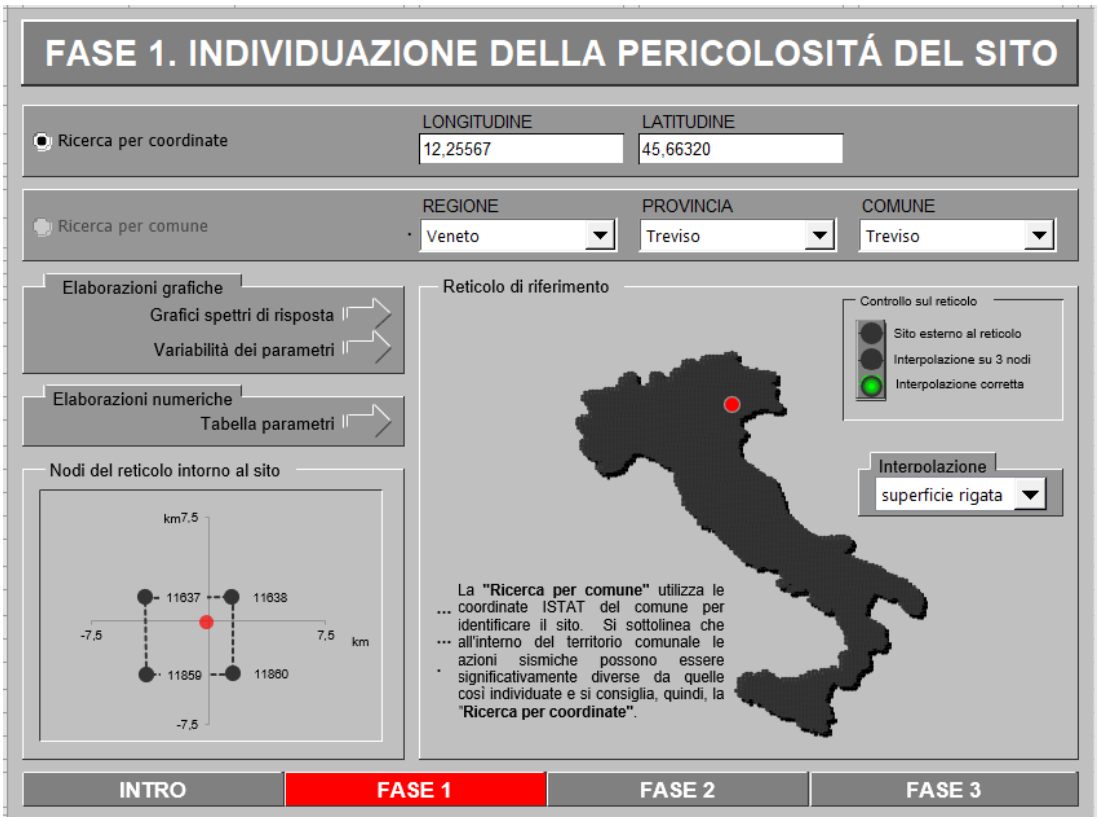

Fig. 2 : Spettri-NTC definizione parametri sismici

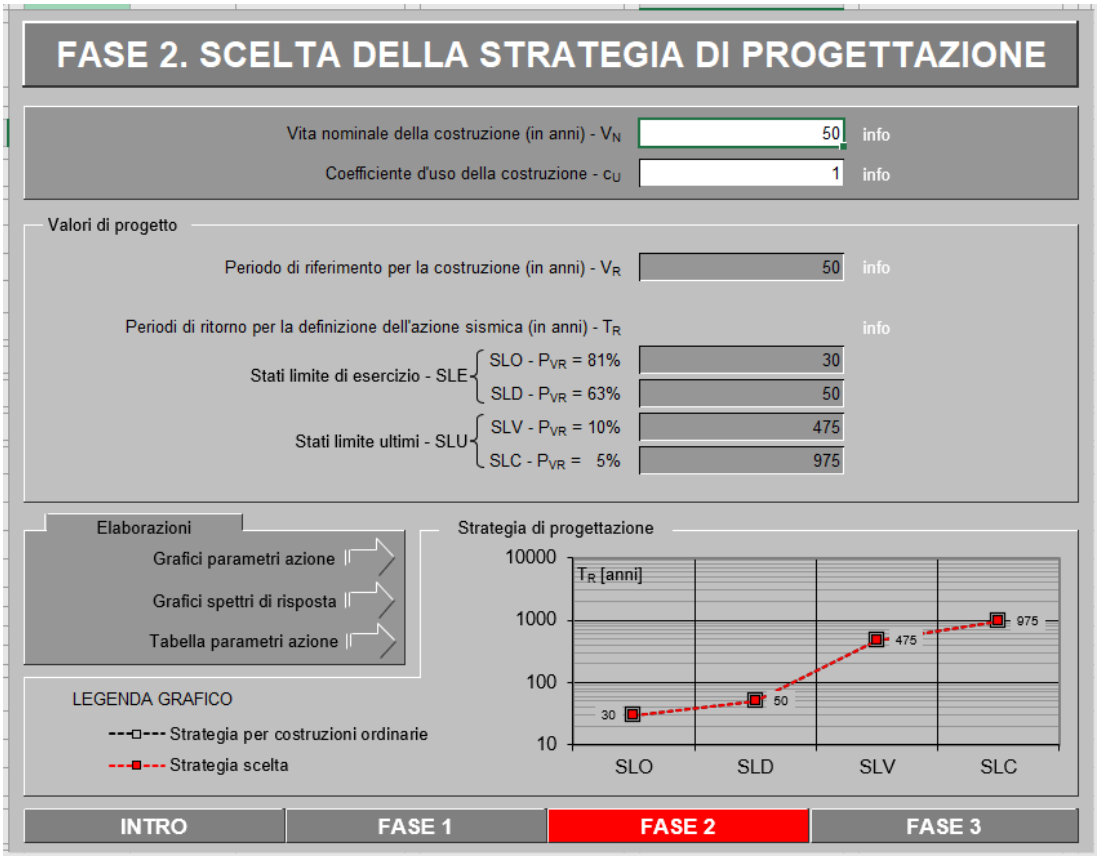

Fig. 3 : Spettri-NTC definizione parametri sismici

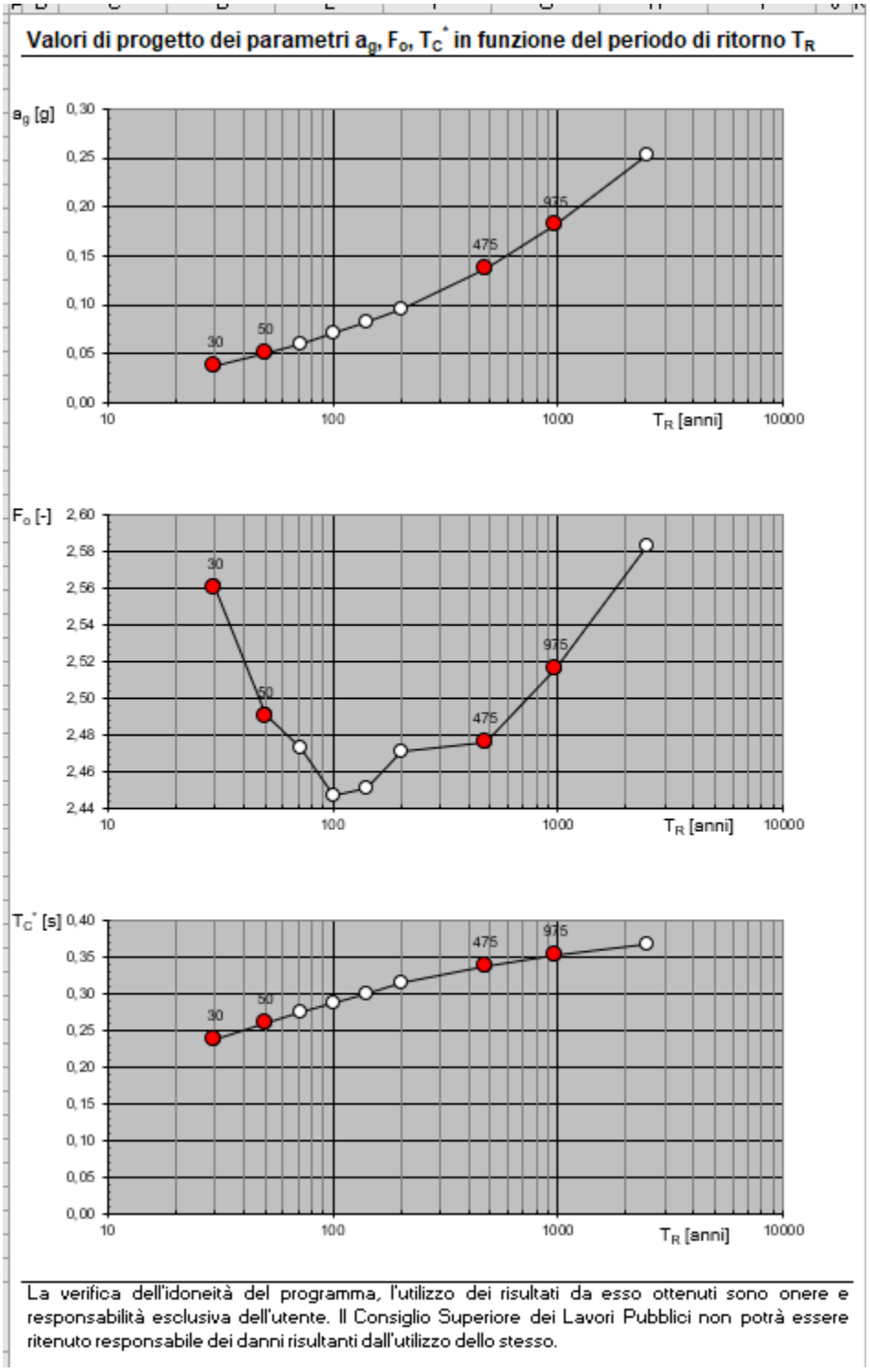

Fig. 4 : Spettri-NTC definizione parametri sismici

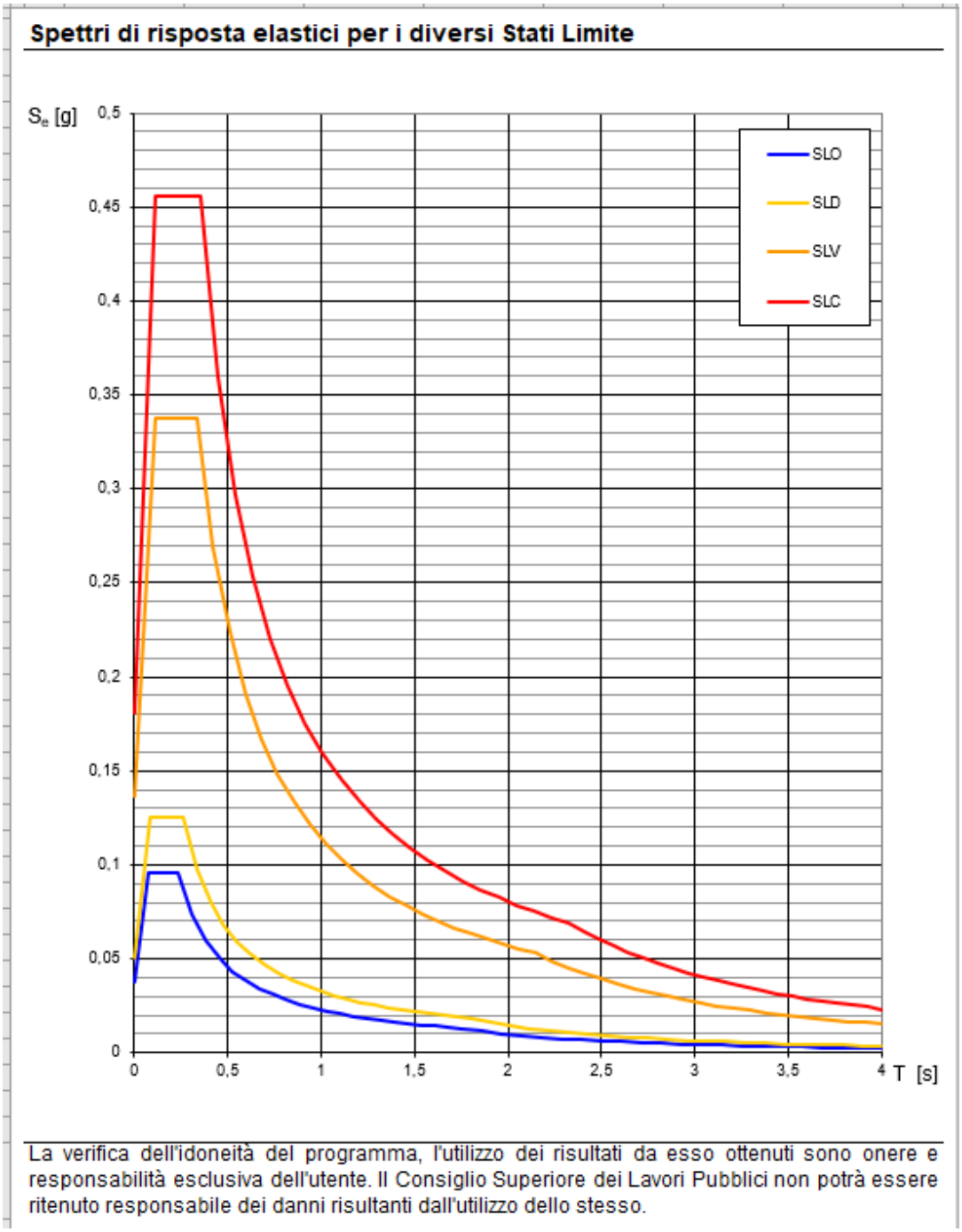

Fig. 5 : Spettri-NTC definizione parametri sismici

Valori dei parametri a_g, F_o, T_C^* per i periodi di ritorno T_R associati a ciascuno Sl

SLATO LIMITE	T_R [anni]	a_g [g]	F_o [-]	T_C^* [s]
SLO	30	0,038	2,560	0,237
SLD	50	0,050	2,490	0,260
SLV	475	0,136	2,476	0,337
SLC	975	0,181	2,516	0,353

Fig. 6 : Spettri-NTC parametri sismici di input per analisi

3.3 CONDIZIONI DI CARICO

Le condizioni di carico oggetto di verifica sono opportunamente combinate e sviluppate sia in campo statico che sismico, di cui si riportano alcuni esempi sono quindi le seguenti:

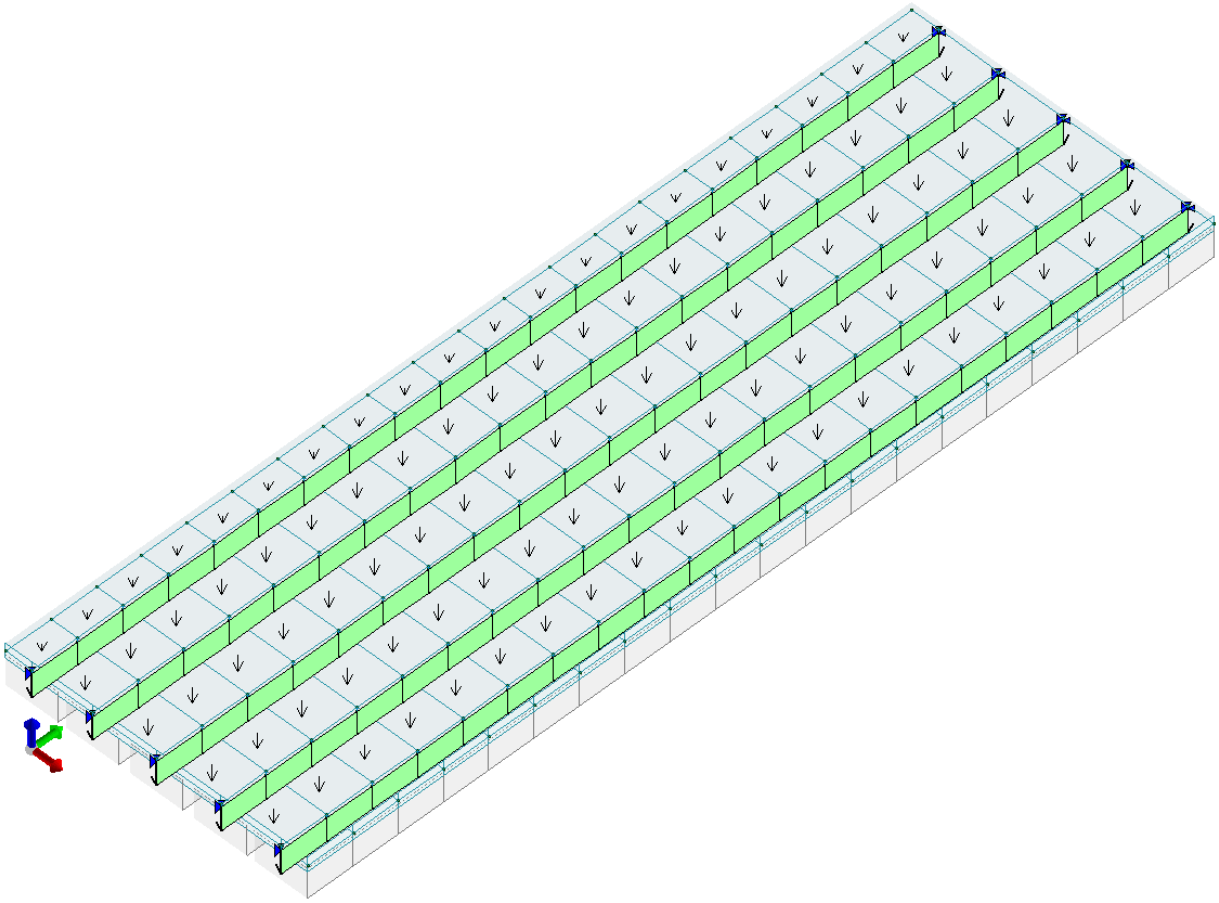

Figura 3-2: Schema carico permanente – peso proprio strutture

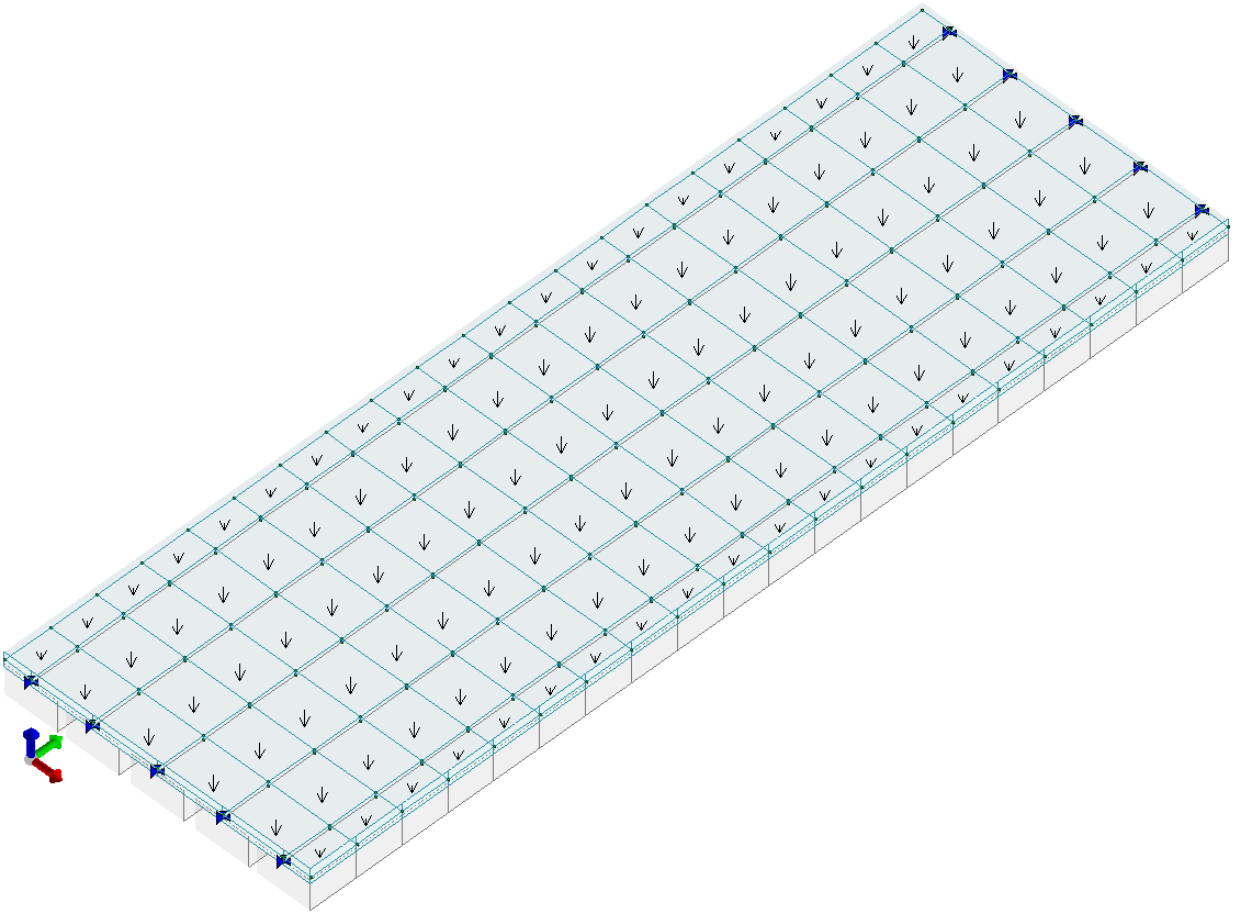

Figura 3-3: Schema carico permanente – G2

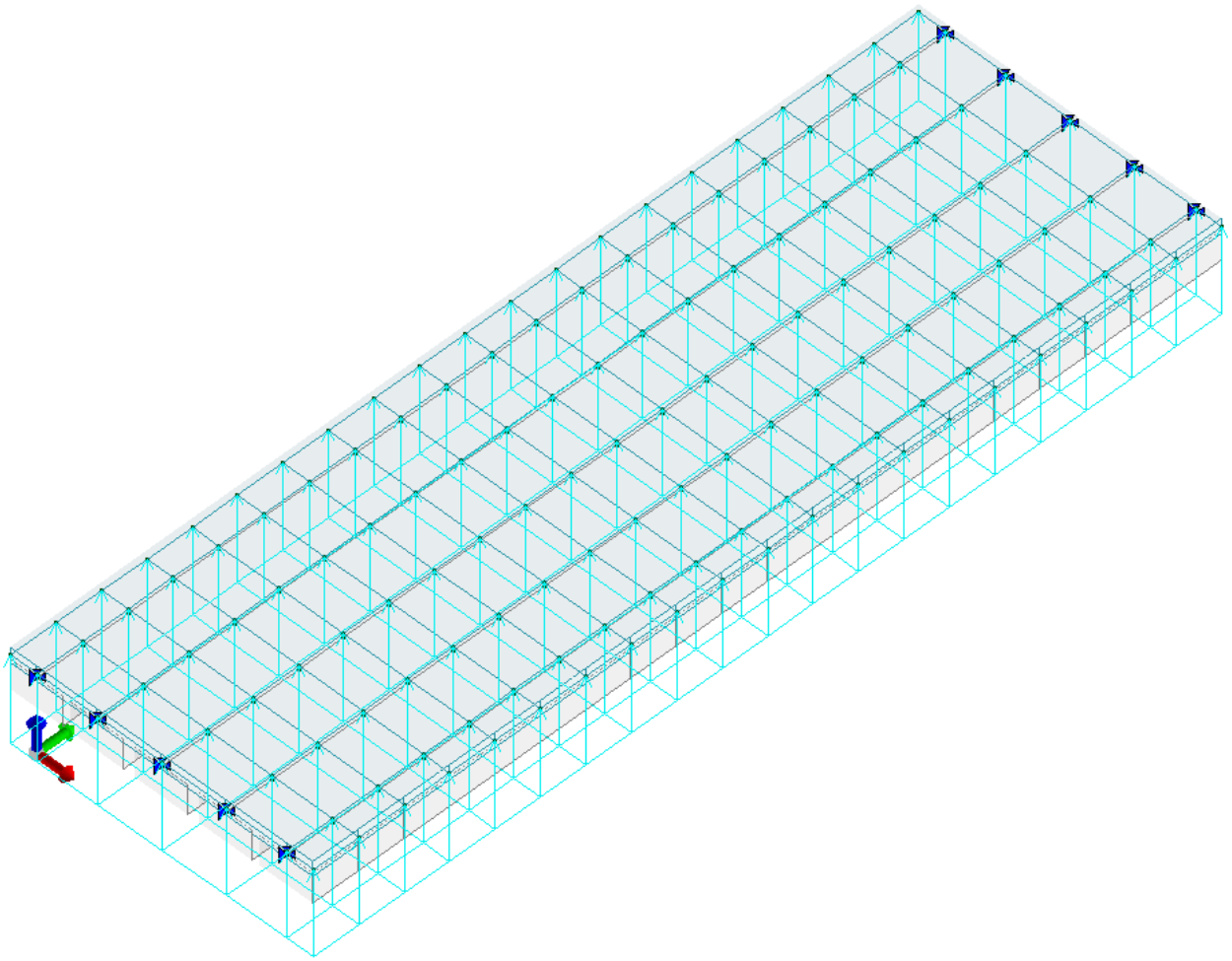

Figura 3-4: Schema carico Q5 – VENTO - NEVE

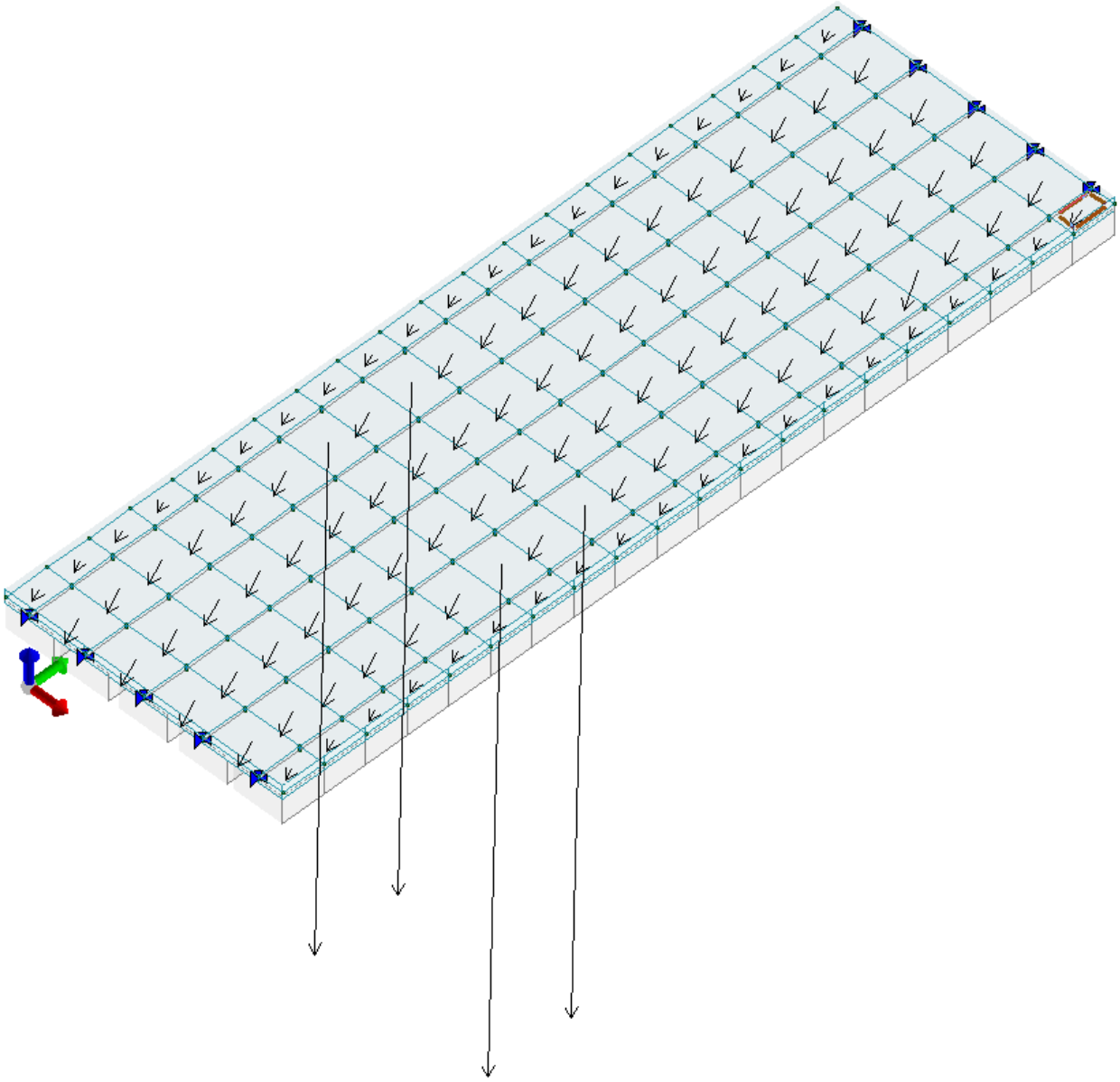

Figura 3-5: Schema carico variabile – TRAFFICO Q1K + Q3.

3.4 COMBINAZIONI DI CARICO E APPROCCI PROGETTUALI DI VERIFICA

La generazione delle combinazioni di carico da adottare per le verifiche agli Stati Limite Ultimi e di Esercizio delle strutture di fondazione prevede la scelta di un approccio progettuale.

In particolare, devono essere definiti i coefficienti di sicurezza parziali per le azioni (A1 e A2), per i parametri geotecnici (M1 e M2) e per le resistenze (R1, R2 e R3).

I valori dei coefficienti di sicurezza parziali per le azioni sono riportati nella seguente tabella:

Tabella 3-1: Coefficienti parziali per le azioni – Tabella 6.2.I NTC

Carichi	Effetto	Coeff. parziale γ_F (o γ_E)	EQU	(A1) STR	(A2) GEO
Permanenti	Favorevole	γ_{G1}	0,9	1,0	1,0
	Sfavorevole		1,1	1,3	1,0
Permanenti non strutturali	Favorevole	γ_{G2}	0,0	0,0	0,0
	Sfavorevole		1,5	1,5	1,3
Variabili	Favorevole	γ_{Qi}	0,0	0,0	0,0
	Sfavorevole		1,5	1,5	1,3

(1) Nel caso in cui i carichi permanenti non strutturali (per esempio i carichi permanenti portati) siano compiutamente definiti, si potranno adottare gli stessi coefficienti validi per le azioni permanenti.

Tabella 3-2: Coefficienti parziali per i parametri del terreno – Tabella 6.2.II NTC

I valori dei coefficienti di sicurezza parziali parametri del terreno sono riportati nella seguente tabella:

Parametro	Grandezza alla quale applicare il coefficiente parziale	Coefficiente parziale γ_M	(M1)	(M2)
Tangente dell'angolo di resistenza al taglio	$\tan \varphi'_k$	$\gamma_{\varphi'}$	1,0	1,25
Coesione efficace	c'_k	$\gamma_{c'}$	1,0	1,25
Resistenza non drenata	c_{uk}	γ_{cu}	1,0	1,4
Peso dell'unità di volume	γ	γ_γ	1,0	1,0

I coefficienti parziali per la resistenza R1, R2 e R3 dipendono dalla tipologia di opera e dal tipo di verifica, per la fondazione oggetto di analisi, trattandosi di FONDAZIONI SUPERFICIALI, sono riportati nelle seguenti schede sinottiche, e sono riferiti all'Approccio 01, che prevede due diverse combinazioni:

- DA1 – C1: (A1+M1+R1), definita STRU e generalmente più severa nei confronti del dimensionamento strutturale;
- DA1 – C2: (A2+M2+R2), definita GEO e generalmente più severa nei confronti del dimensionamento geotecnico.

Le NTC2018 richiedono che per le strutture di fondazione vengano soddisfatte le verifiche di sicurezza nei confronti degli Stati Limite Ultimi indotti dallo sviluppo di meccanismi di collasso dovuti sia alla mobilitazione della resistenza del terreno (SLU GEO DA1-C2) e sia al raggiungimento della resistenza degli elementi strutturali che compongono la fondazione (SLU STR DA1 C1).

4 METODO DI CALCOLO E MODELLO NUMERICO

4.1 CARATTERISTICHE MATERIALI UTILIZZATI

4.1.1 LEGENDA TABELLA DATI MATERIALI

Il programma consente l'uso di materiali diversi. Sono previsti i seguenti tipi di materiale:

1	materiale tipo cemento armato
2	materiale tipo acciaio
3	materiale tipo muratura
4	materiale tipo legno
5	materiale tipo generico

I materiali utilizzati nella modellazione sono individuati da una sigla identificativa ed un codice numerico (gli elementi strutturali richiamano quest'ultimo nella propria descrizione). Per ogni materiale vengono riportati in tabella i seguenti dati:

Young	modulo di elasticità normale E
Poisson	coefficiente di contrazione trasversale ni
G	modulo di elasticità tangenziale
Gamma	peso specifico
Alfa	coefficiente di dilatazione termica
Fattore di confidenza FC m	Fattore di confidenza specifico per materiale; (è riportato solo se diverso da quello globale della struttura)
Fattore di confidenza FC a	Fattore di confidenza specifico per l'armatura (è riportato solo se diverso da quello globale della struttura)
Elasto-plastico	Materiale elastico perfettamente plastico per aste non lineari
Massima compressione	Massima tensione di compressione per aste non lineari
Massima trazione	Massima tensione di trazione per aste non lineari
Fattore attrito	Coefficinete di attrito per aste non lineari
Rapporto HRDb	Rapporto di hardening a flessione
Rapporto HRDv	Rapporto di hardening a taglio

I dati soprariportati vengono utilizzati per la modellazione dello schema statico e per la determinazione dei carichi inerziali e termici. In relazione al tipo di materiale vengono riportati inoltre:

1	c.a.		
		Resistenza Rc	resistenza a cmpressione cubica
		Resistenza fctm	resistenza media a trazione semplice
		Coefficiente ksb	Coefficiente di riduzione della resistenza a compressione da utilizzare nello stress block
2	acciaio		
		Tensione ft	Valore della tensione di rottura
		Tensione fy	Valore della tensione di snervamento
		Resistenza fd	Resistenza di calcolo per SL CNR-UNI 10011
		Resistenza fd (>40)	Resistenza di calcolo per SL CNR-UNI 10011 per spessori > 40mm
		Tensione ammissibile	Tensione ammissibile CNR-UNI 10011
		Tensione ammissibile(>40)	Tensione ammissibile CNR-UNI 10011 per spessori > 40mm
3	muratura		
		Muratura consolidata	Muratura per la quale si prevedono interventi di rinforzo"
		Incremento resistenza	Incremento conseguito in termini di resistenza
		Incremento rigidezza	Incremento conseguito in termini di rigidezza
		Resistenza f	Valore della resistenza a compressione
		Resistenza fv0	Valore della resistenza a taglio in assenza di tensioni normali
		Resistenza fh	Valore della resistenza a compressione orizzontale
		Resistenza fb	Valore della resistenza a compressione dei blocchi
		Resistenza fbh	Valore della resistenza a compressione dei blocchi in direzione orizzontale
		Resistenza fv0h	Valore della resistenza a taglio in assenza di tensioni normali per le travi
		Resistenza ft	Valore della resistenza a trazione per fessurazione diagonale
		Resistenza fvlim	Valore della massima resistenza a taglio
		Resistenza fbt	Valore della resistenza a trazione dei blocchi
		Coefficiente mu	Coefficiente d'attrito utilizzato per la resistenza a taglio (tipicamente 0.4)
		Coefficiente fi	Coefficiente d'ingranamento utilizzato per la resistenza a taglio
		Coefficiente ksb	Coefficiente di riduzione della resistenza a compressione da utilizzare nello stress block
4	legno		
		E0,05	Modulo di elasticità corrispondente ad un frattile del 5%
		Resistenza fc0	Valore della resistenza a compressione parallela
		Resistenza ft0	Valore della resistenza a trazione parallela
		Resistenza fm	Valore della resistenza a flessione
		Resistenza fv	Valore della resistenza a taglio

Resist. ft0k	Resistenza caratteristica (tensione amm. per REGLES) per trazione
Resist. fmk	Resistenza caratteristica (tensione amm. per REGLES) per flessione
Resist. fvk	Resistenza caratteristica (tensione amm. per REGLES) per taglio
Modulo E0,05	Modulo elastico parallelo caratteristico
Lamellare	lamellare o massiccio

Nel tabulato si riportano sia i valori caratteristici che medi utilizzando gli uni e/o gli altri in relazione alle richieste di normativa ed alla tipologia di verifica. (Cap.7 NTC18 per materiali nuovi, Cap.8 NTC18 e relativa circolare 21/01/2019 per materiali esistenti, Linee Guida Reluis per incamiciatura CAM, CNR-DT 200 per interventi con FRP)

Vengono inoltre riportate le tabelle contenenti il riassunto delle informazioni assegnate nei criteri di progetto in uso.

Id	Tipo / Note	V. caratt.	V. medio	Young	Poisson	G	Gamma	Alfa	Altri
		daN/cm2	daN/cm2	daN/cm2		daN/cm2	daN/cm3		
6	Calcestruzzo Classe C35/45			3.463e+05	0.20	1.443e+05	2.50e-03	1.00e-05	
	Resistenza Rc	450.0							
	Resistenza fctm		33.5						
	Rapporto Rfessurata								1.00
	Coefficiente ksb								0.85
	Rapporto HRDb								1.00e-05
	Rapporto HRDv								1.00e-05
157	Materiale inf. rigido no peso E = 1.000e+09			1.000e+09	0.0	5.000e+08	0.0	1.20e-05	
	Rapporto HRDb								1.00e-05
	Rapporto HRDv								1.00e-05

Gusci c.a.	1/7/..	2/8/..	3/9/..	4/10/..	5/11/..	6/12/..
Armatura						
Inclinazione Ax [gradi]	0.0					
Angolo Ax-Ay [gradi]	90.00					
Minima tesa	0.31					
Massima tesa	0.78					
Maglia unica centrale	NO					
Copriferro [cm]	2.00					
Maglia x						
diametro	16					
passo	10					
diametro aggiuntivi	16					
Maglia y						
diametro	16					
passo	10					
diametro aggiuntivi	16					
Stati limite ultimi						
Tensione fy [daN/cm2]	4500.00					
Tipo acciaio	tipo C					
Coefficiente gamma s	1.15					
Coefficiente gamma c	1.50					
Verifiche con N costante	SI					
Applica SLU da DIN	NO					
Tensioni ammissibili						
Tensione amm. cls [daN/cm2]	97.50					
Tensione amm. acciaio [daN/cm2]	2600.00					
Rapporto omogeneizzazione N	15.00					
Massimo rapporto area compressa/tesa	1.00					
Resistenza al fuoco						
3- intradosso	NO					
3+ estradosso	NO					
Tempo di esposizione R	15					

Travi c.a.	1/7/..	2/8/..	3/9/..	4/10/..	5/11/..	6/12/..
Generalità						
Progetta a filo	NO					
Af inf: da q*L*L /	0.0					
Armatura						
Minima tesa	0.31					
Minima compressa	0.31					
Massima tesa	4.00					

Travi c.a.	**1/7/..**	**2/8/..**	**3/9/..**	**4/10/..**	**5/11/..**	**6/12/..**
Da sezione	SI					
Usa armatura teorica	NO					
Stati limite ultimi						
Tensione fy [daN/cm2]	4500.00					
Tensione fy staffe [daN/cm2]	4500.00					
Tipo acciaio	tipo C					
Coefficiente gamma s	1.15					
Coefficiente gamma c	1.50					
Verifiche con N costante	SI					
Fattore di ridistribuzione	0.0					
Modello per il confinamento						
Relazione tensio-deformativa	Mander					
Incrudimento acciaio	5.000e-03					
Fattore lambda	1.00					
epsilon max,s	4.000e-02					
epsilon cu2	4.500e-03					
epsilon c2	0.0					
epsilon cy	0.0					
Tensioni ammissibili						
Tensione amm. cls [daN/cm2]	97.50					
Tensione amm. acciaio [daN/cm2]	2600.00					
Rapporto omogeneizzazione N	15.00					
Massimo rapporto area compressa/tesa	1.00					
Staffe						
Diametro staffe	0.0					
Passo minimo [cm]	4.00					
Passo massimo [cm]	30.00					
Passo raffittito [cm]	15.00					
Lunghezza zona raffittita [cm]	50.00					
Ctg(Teta) Max	2.50					
Percentuale sagomati	0.0					
Luce di taglio per GR [cm]	1.00					
Adotta scorrimento medio	NO					
Torsione non essenziale inclusa	SI					

4.2 MODELLAZIONE DELLE SEZIONI

4.2.1 LEGENDA TABELLA DATI SEZIONI

Il programma consente l'uso di sezioni diverse. Sono previsti i seguenti tipi di sezione:

1. sezione di tipo generico
2. profilati semplici
3. profilati accoppiati e speciali

Le sezioni utilizzate nella modellazione sono individuate da una sigla identificativa ed un codice numerico (gli elementi strutturali richiamano quest'ultimo nella propria descrizione). Per ogni sezione vengono riportati in tabella i seguenti dati:

Area	area della sezione
A V2	area della sezione/fattore di taglio (per il taglio in direzione 2)
A V3	area della sezione/fattore di taglio (per il taglio in direzione 3)
Jt	fattore torsionale di rigidezza
J2-2	momento d'inerzia della sezione riferito all'asse 2
J3-3	momento d'inerzia della sezione riferito all'asse 3
W2-2	modulo di resistenza della sezione riferito all'asse 2
W3-3	modulo di resistenza della sezione riferito all'asse 3
Wp2-2	modulo di resistenza plastico della sezione riferito all'asse 2
Wp3-3	modulo di resistenza plastico della sezione riferito all'asse 3

I dati sopra riportati vengono utilizzati per la determinazione dei carichi inerziali e per la definizione delle rigidezze degli elementi strutturali; qualora il valore di Area V2 (e/o Area V3) sia nullo la deformabilità per taglio V2 (e/o V3) è trascurata. La valutazione delle caratteristiche inerziali delle sezioni è condotta nel riferimento 2-3 dell'elemento.

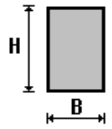 rettangolare	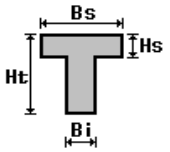 a T	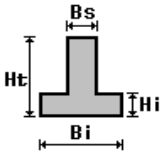 a T rovescia	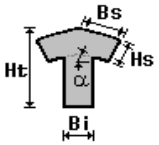 a T di colmo	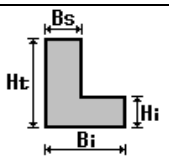 a L	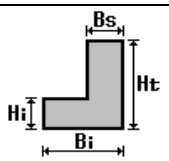 a L specchiata
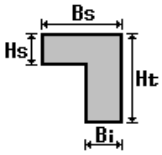 a L specchiata rovescia	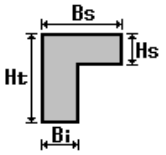 a L rovescia	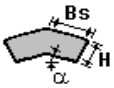 a L di colmo	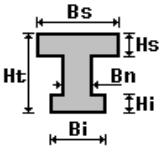 a doppio T	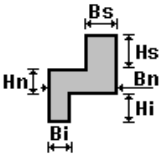 a quattro specchiata	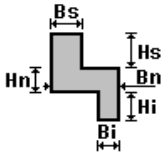 a quattro
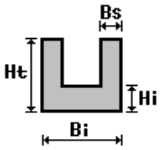 a U	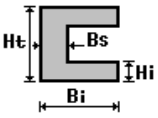 a C	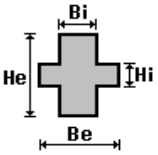 a croce	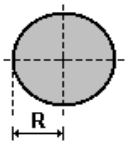 circolare	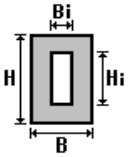 rettangolare cava	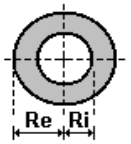 circolare cava

Per quanto concerne i profilati semplici ed accoppiati l'asse 2 del riferimento coincide con l'asse x riportato nei più diffusi profilatari.

Per quanto concerne le sezioni di tipo generico (tipo 1.):
i valori dimensionali con prefisso B sono riferiti all'asse 2
i valori dimensionali con prefisso H sono riferiti all'asse 3

Id	Tipo	Area	A V2	A V3	Jt	J 2-2	J 3-3	W 2-2	W 3-3	Wp 2-2	Wp 3-3
		cm2	cm2	cm2	cm4	cm4	cm4	cm3	cm3	cm3	cm3
1	Rettangolare: b=70 h=40	2800.00	2333.33	2333.33	9.557e+05	1.143e+06	3.733e+05	3.267e+04	1.867e+04	4.900e+04	2.800e+04
2	Circolare: r=2	12.57	10.60	10.60	25.13	12.57	12.57	6.28	6.28	10.67	10.67

4.3 MODELLAZIONE STRUTTURA: NODI

4.3.1 LEGENDA TABELLA DATI NODI

Il programma utilizza per la modellazione nodi strutturali.
Ogni nodo è individuato dalle coordinate cartesiane nel sistema di riferimento globale (X Y Z).
Ad ogni nodo è eventualmente associato un codice di vincolamento rigido, un codice di fondazione speciale, ed un set di sei molle (tre per le traslazioni, tre per le rotazioni). Le tabelle sottoriportate riflettono le succitate possibilità. In particolare per ogni nodo viene indicato in tabella:

Nodo	numero del nodo.
X	valore della coordinata X
Y	valore della coordinata Y
Z	valore della coordinata Z

Per i nodi ai quali sia associato un codice di vincolamento rigido, un codice di fondazione speciale o un set di molle viene indicato in tabella:

Nodo	numero del nodo.
X	valore della coordinata X
Y	valore della coordinata Y
Z	valore della coordinata Z
Note	eventuale codice di vincolo (es. v=110010 sei valori relativi ai sei gradi di libertà previsti per il nodo TxTyTzRxRyRz, il valore 1 indica che lo spostamento o rotazione relativo è impedito, il valore 0 indica che lo spostamento o rotazione relativo è libero).
Note	(FS = 1, 2,…) eventuale codice del tipo di fondazione speciale (1, 2,… fanno riferimento alle tipologie: plinto, palo, plinto su pali,…) che è collegato al nodo. (ISO = "id SIGLA") indice e sigla identificativa dell' eventuale isolatore sismico assegnato al nodo
Rig. TX	valore della rigidezza dei vincoli elastici eventualmente applicati al nodo, nello specifico TX (idem per TY, TZ, RX, RY, RZ).

Per strutture sismicamente isolate viene inoltre inserita la tabella delle caratteristiche per gli isolatori utilizzati; le caratteristiche sono indicate in conformità al cap. 7.10 del D.M. 17/01/18

4.3.2 TABELLA DATI NODI

Nodo	X	Y	Z	Nodo	X	Y	Z	Nodo	X	Y	Z
	cm	cm	cm		cm	cm	cm		cm	cm	cm
3	0.0	60.0	100.0	4	0.0	120.0	100.0	5	0.0	180.0	100.0
6	0.0	240.0	100.0	7	0.0	300.0	100.0	8	0.0	360.0	100.0
9	0.0	420.0	100.0	10	0.0	480.0	100.0	11	0.0	540.0	100.0
12	0.0	600.0	100.0	13	0.0	660.0	100.0	14	0.0	720.0	100.0
15	0.0	780.0	100.0	16	0.0	840.0	100.0	17	0.0	900.0	100.0
18	0.0	960.0	100.0	19	0.0	1020.0	100.0	20	0.0	1080.0	100.0
21	0.0	1140.0	100.0	24	80.0	60.0	100.0	25	80.0	120.0	100.0
26	80.0	180.0	100.0	27	80.0	240.0	100.0	28	80.0	300.0	100.0
29	80.0	360.0	100.0	30	80.0	420.0	100.0	31	80.0	480.0	100.0
32	80.0	540.0	100.0	33	80.0	600.0	100.0	34	80.0	660.0	100.0
35	80.0	720.0	100.0	36	80.0	780.0	100.0	37	80.0	840.0	100.0
38	80.0	900.0	100.0	39	80.0	960.0	100.0	40	80.0	1020.0	100.0
41	80.0	1080.0	100.0	42	80.0	1140.0	100.0	43	0.0	1200.0	105.0
44	80.0	1200.0	105.0	45	0.0	1140.0	105.0	46	80.0	1140.0	105.0
47	0.0	1080.0	105.0	48	80.0	1080.0	105.0	49	0.0	120.0	105.0
50	80.0	120.0	105.0	51	0.0	780.0	105.0	52	80.0	780.0	105.0
53	0.0	420.0	105.0	54	80.0	420.0	105.0	55	0.0	1020.0	105.0
56	80.0	1020.0	105.0	57	0.0	300.0	105.0	58	80.0	300.0	105.0
59	0.0	540.0	105.0	60	80.0	540.0	105.0	61	0.0	720.0	105.0
62	80.0	720.0	105.0	63	0.0	960.0	105.0	64	80.0	960.0	105.0
65	80.0	0.0	105.0	66	0.0	0.0	105.0	67	0.0	60.0	105.0
68	80.0	60.0	105.0	69	0.0	360.0	105.0	70	80.0	360.0	105.0
71	0.0	900.0	105.0	72	80.0	900.0	105.0	73	0.0	660.0	105.0
74	80.0	660.0	105.0	75	0.0	480.0	105.0	76	80.0	480.0	105.0
77	0.0	180.0	105.0	78	80.0	180.0	105.0	79	0.0	840.0	105.0
80	80.0	840.0	105.0	81	0.0	240.0	105.0	82	80.0	240.0	105.0
83	0.0	600.0	105.0	84	80.0	600.0	105.0	87	165.0	60.0	100.0
88	165.0	120.0	100.0	89	165.0	180.0	100.0	90	165.0	240.0	100.0
91	165.0	300.0	100.0	92	165.0	360.0	100.0	93	165.0	420.0	100.0
94	165.0	480.0	100.0	95	165.0	540.0	100.0	96	165.0	600.0	100.0
97	165.0	660.0	100.0	98	165.0	720.0	100.0	99	165.0	780.0	100.0
100	165.0	840.0	100.0	101	165.0	900.0	100.0	102	165.0	960.0	100.0

Nodo	X	Y	Z	Nodo	X	Y	Z	Nodo	X	Y	Z
103	165.0	1020.0	100.0	104	165.0	1080.0	100.0	105	165.0	1140.0	100.0
106	165.0	1200.0	105.0	107	165.0	1140.0	105.0	108	165.0	1080.0	105.0
109	165.0	120.0	105.0	110	165.0	780.0	105.0	111	165.0	420.0	105.0
112	165.0	1020.0	105.0	113	165.0	300.0	105.0	114	165.0	540.0	105.0
115	165.0	720.0	105.0	116	165.0	960.0	105.0	117	165.0	0.0	105.0
118	165.0	60.0	105.0	119	165.0	360.0	105.0	120	165.0	900.0	105.0
121	165.0	660.0	105.0	122	165.0	480.0	105.0	123	165.0	180.0	105.0
124	165.0	840.0	105.0	125	165.0	240.0	105.0	126	165.0	600.0	105.0
129	250.0	60.0	100.0	130	250.0	120.0	100.0	131	250.0	180.0	100.0
132	250.0	240.0	100.0	133	250.0	300.0	100.0	134	250.0	360.0	100.0
135	250.0	420.0	100.0	136	250.0	480.0	100.0	137	250.0	540.0	100.0
138	250.0	600.0	100.0	139	250.0	660.0	100.0	140	250.0	720.0	100.0
141	250.0	780.0	100.0	142	250.0	840.0	100.0	143	250.0	900.0	100.0
144	250.0	960.0	100.0	145	250.0	1020.0	100.0	146	250.0	1080.0	100.0
147	250.0	1140.0	100.0	148	250.0	1200.0	105.0	149	250.0	1140.0	105.0
150	250.0	1080.0	105.0	151	250.0	120.0	105.0	152	250.0	780.0	105.0
153	250.0	420.0	105.0	154	250.0	1020.0	105.0	155	250.0	300.0	105.0
156	250.0	540.0	105.0	157	250.0	720.0	105.0	158	250.0	960.0	105.0
159	250.0	0.0	105.0	160	250.0	60.0	105.0	161	250.0	360.0	105.0
162	250.0	900.0	105.0	163	250.0	660.0	105.0	164	250.0	480.0	105.0
165	250.0	180.0	105.0	166	250.0	840.0	105.0	167	250.0	240.0	105.0
168	250.0	600.0	105.0	171	330.0	60.0	100.0	172	330.0	120.0	100.0
173	330.0	180.0	100.0	174	330.0	240.0	100.0	175	330.0	300.0	100.0
176	330.0	360.0	100.0	177	330.0	420.0	100.0	178	330.0	480.0	100.0
179	330.0	540.0	100.0	180	330.0	600.0	100.0	181	330.0	660.0	100.0
182	330.0	720.0	100.0	183	330.0	780.0	100.0	184	330.0	840.0	100.0
185	330.0	900.0	100.0	186	330.0	960.0	100.0	187	330.0	1020.0	100.0
188	330.0	1080.0	100.0	189	330.0	1140.0	100.0	190	330.0	1200.0	105.0
191	330.0	1140.0	105.0	192	330.0	1080.0	105.0	193	330.0	120.0	105.0
194	330.0	780.0	105.0	195	330.0	420.0	105.0	196	330.0	1020.0	105.0
197	330.0	300.0	105.0	198	330.0	540.0	105.0	199	330.0	720.0	105.0
200	330.0	960.0	105.0	201	330.0	0.0	105.0	202	330.0	60.0	105.0
203	330.0	360.0	105.0	204	330.0	900.0	105.0	205	330.0	660.0	105.0
206	330.0	480.0	105.0	207	330.0	180.0	105.0	208	330.0	840.0	105.0
209	330.0	240.0	105.0	210	330.0	600.0	105.0	211	-35.0	1200.0	105.0
212	-35.0	1140.0	105.0	213	-35.0	540.0	105.0	214	-35.0	1080.0	105.0
215	-35.0	120.0	105.0	216	-35.0	1020.0	105.0	217	-35.0	480.0	105.0
218	-35.0	960.0	105.0	219	-35.0	420.0	105.0	220	-35.0	900.0	105.0
221	-35.0	360.0	105.0	222	-35.0	840.0	105.0	223	-35.0	60.0	105.0
224	-35.0	780.0	105.0	225	-35.0	300.0	105.0	226	-35.0	720.0	105.0
227	-35.0	240.0	105.0	228	-35.0	660.0	105.0	229	-35.0	180.0	105.0
230	-35.0	600.0	105.0	231	-35.0	0.0	105.0	232	365.0	1140.0	105.0
233	365.0	1200.0	105.0	234	365.0	1080.0	105.0	235	365.0	1020.0	105.0
236	365.0	960.0	105.0	237	365.0	900.0	105.0	238	365.0	840.0	105.0
239	365.0	780.0	105.0	240	365.0	720.0	105.0	241	365.0	660.0	105.0
242	365.0	600.0	105.0	243	365.0	540.0	105.0	244	365.0	480.0	105.0
245	365.0	420.0	105.0	246	365.0	360.0	105.0	247	365.0	300.0	105.0
248	365.0	240.0	105.0	249	365.0	180.0	105.0	250	365.0	120.0	105.0
251	365.0	60.0	105.0	252	365.0	0.0	105.0				

Nodo	X	Y	Z	Note	Rig. TX	Rig. TY	Rig. TZ	Rig. RX	Rig. RY	Rig. RZ
	cm	cm	cm		daN/cm	daN/cm	daN/cm	daN cm/rad	daN cm/rad	daN cm/rad
1	0.0	0.0	100.0	v=111000						
2	0.0	1200.0	100.0	v=111000						
22	80.0	0.0	100.0	v=111000						
23	80.0	1200.0	100.0	v=111000						
85	165.0	0.0	100.0	v=111000						
86	165.0	1200.0	100.0	v=111000						
127	250.0	0.0	100.0	v=111000						
128	250.0	1200.0	100.0	v=111000						
169	330.0	0.0	100.0	v=111000						
170	330.0	1200.0	100.0	v=111000						

4.4 MODELLAZIONE STRUTTURA: ELEMENTI TRAVE

4.4.1 TABELLA DATI TRAVI

Il programma utilizza per la modellazione elementi a due nodi denominati in generale travi.
Ogni elemento trave è individuato dal nodo iniziale e dal nodo finale.
Ogni elemento è caratterizzato da un insieme di proprietà riportate in tabella che ne completano la modellazione.

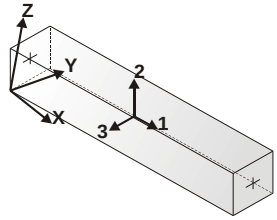

orientamento elementi 2D non verticali

orientamento elementi 2D verticali

In particolare per ogni elemento viene indicato in tabella:

Elem.	numero dell'elemento
Note	codice di comportamento: trave, trave di fondazione, pilastro, asta, asta tesa, asta compressa,
Nodo I (J)	numero del nodo iniziale (finale)
Mat.	codice del materiale assegnato all'elemento
Sez.	codice della sezione assegnata all'elemento
Rotaz.	valore della rotazione dell'elemento, attorno al proprio asse, nel caso in cui l'orientamento di default non sia adottabile; l'orientamento di default prevede per gli elementi non verticali l'asse 2 contenuto nel piano verticale e l'asse 3 orizzontale, per gli elementi verticali l'asse 2 diretto secondo X negativo e l'asse 3 diretto secondo Y negativo
Svincolo I (J)	codici di svincolo per le azioni interne; i primi sei codici si riferiscono al nodo iniziale, i restanti sei al nodo finale (il valore 1 indica che la relativa azione interna non è attiva)
Wink V	costante di sottofondo (coefficiente di Winkler) per la modellazione della trave su suolo elastico
Wink O	costante di sottofondo (coefficiente di Winkler) per la modellazione del suolo elastico orizzontale

Elem.	Note	Nodo I	Nodo J	Mat.	Sez.	Crit.	Rotaz.	Svincolo I	Svincolo J	Wink V	Wink O
							gradi			daN/cm3	daN/cm3
1	Trave	1	3	6	1	1					
2	Trave	3	4	6	1	1					
3	Trave	4	5	6	1	1					
4	Trave	5	6	6	1	1					
5	Trave	6	7	6	1	1					
6	Trave	7	8	6	1	1					
7	Trave	8	9	6	1	1					
8	Trave	9	10	6	1	1					
9	Trave	10	11	6	1	1					
10	Trave	11	12	6	1	1					
11	Trave	12	13	6	1	1					
12	Trave	13	14	6	1	1					
13	Trave	14	15	6	1	1					
14	Trave	15	16	6	1	1					
15	Trave	16	17	6	1	1					
16	Trave	17	18	6	1	1					
17	Trave	18	19	6	1	1					
18	Trave	19	20	6	1	1					
19	Trave	20	21	6	1	1					
20	Trave	21	2	6	1	1					
21	Trave	22	24	6	1	1					
22	Trave	24	25	6	1	1					
23	Trave	25	26	6	1	1					
24	Trave	26	27	6	1	1					
25	Trave	27	28	6	1	1					
26	Trave	28	29	6	1	1					
27	Trave	29	30	6	1	1					
28	Trave	30	31	6	1	1					
29	Trave	31	32	6	1	1					
30	Trave	32	33	6	1	1					
31	Trave	33	34	6	1	1					
32	Trave	34	35	6	1	1					

Elem.	Note	Nodo I	Nodo J	Mat.	Sez.	Crit.	Rotaz.	Svincolo I	Svincolo J	Wink V	Wink O
33	Trave	35	36	6	1	1					
34	Trave	36	37	6	1	1					
35	Trave	37	38	6	1	1					
36	Trave	38	39	6	1	1					
37	Trave	39	40	6	1	1					
38	Trave	40	41	6	1	1					
39	Trave	41	42	6	1	1					
40	Trave	42	23	6	1	1					
41	Pilas.	2	43	157	2	1					
42	Pilas.	23	44	157	2	1					
43	Pilas.	21	45	157	2	1					
44	Pilas.	42	46	157	2	1					
45	Pilas.	20	47	157	2	1					
46	Pilas.	41	48	157	2	1					
47	Pilas.	6	81	157	2	1					
48	Pilas.	27	82	157	2	1					
49	Pilas.	19	55	157	2	1					
50	Pilas.	40	56	157	2	1					
51	Pilas.	10	75	157	2	1					
52	Pilas.	31	76	157	2	1					
53	Pilas.	18	63	157	2	1					
54	Pilas.	39	64	157	2	1					
55	Pilas.	1	66	157	2	1					
56	Pilas.	22	65	157	2	1					
57	Pilas.	17	71	157	2	1					
58	Pilas.	38	72	157	2	1					
59	Pilas.	9	53	157	2	1					
60	Pilas.	30	54	157	2	1					
61	Pilas.	16	79	157	2	1					
62	Pilas.	37	80	157	2	1					
63	Pilas.	5	77	157	2	1					
64	Pilas.	26	78	157	2	1					
65	Pilas.	15	51	157	2	1					
66	Pilas.	36	52	157	2	1					
67	Pilas.	8	69	157	2	1					
68	Pilas.	29	70	157	2	1					
69	Pilas.	14	61	157	2	1					
70	Pilas.	35	62	157	2	1					
71	Pilas.	3	67	157	2	1					
72	Pilas.	24	68	157	2	1					
73	Pilas.	13	73	157	2	1					
74	Pilas.	34	74	157	2	1					
75	Pilas.	7	57	157	2	1					
76	Pilas.	28	58	157	2	1					
77	Pilas.	12	83	157	2	1					
78	Pilas.	33	84	157	2	1					
79	Pilas.	4	49	157	2	1					
80	Pilas.	25	50	157	2	1					
81	Pilas.	11	59	157	2	1					
82	Pilas.	32	60	157	2	1					
83	Trave	85	87	6	1	1					
84	Trave	87	88	6	1	1					
85	Trave	88	89	6	1	1					
86	Trave	89	90	6	1	1					
87	Trave	90	91	6	1	1					
88	Trave	91	92	6	1	1					
89	Trave	92	93	6	1	1					
90	Trave	93	94	6	1	1					
91	Trave	94	95	6	1	1					
92	Trave	95	96	6	1	1					
93	Trave	96	97	6	1	1					
94	Trave	97	98	6	1	1					
95	Trave	98	99	6	1	1					
96	Trave	99	100	6	1	1					
97	Trave	100	101	6	1	1					
98	Trave	101	102	6	1	1					
99	Trave	102	103	6	1	1					
100	Trave	103	104	6	1	1					
101	Trave	104	105	6	1	1					
102	Trave	105	86	6	1	1					
103	Pilas.	86	106	157	2	1					
104	Pilas.	105	107	157	2	1					
105	Pilas.	104	108	157	2	1					
106	Pilas.	90	125	157	2	1					
107	Pilas.	103	112	157	2	1					

Elem.	Note	Nodo I	Nodo J	Mat.	Sez.	Crit.	Rotaz.	Svincolo I	Svincolo J	Wink V	Wink O
108	Pilas.	94	122	157	2	1					
109	Pilas.	102	116	157	2	1					
110	Pilas.	85	117	157	2	1					
111	Pilas.	101	120	157	2	1					
112	Pilas.	93	111	157	2	1					
113	Pilas.	100	124	157	2	1					
114	Pilas.	89	123	157	2	1					
115	Pilas.	99	110	157	2	1					
116	Pilas.	92	119	157	2	1					
117	Pilas.	98	115	157	2	1					
118	Pilas.	87	118	157	2	1					
119	Pilas.	97	121	157	2	1					
120	Pilas.	91	113	157	2	1					
121	Pilas.	96	126	157	2	1					
122	Pilas.	88	109	157	2	1					
123	Pilas.	95	114	157	2	1					
124	Trave	127	129	6	1	1					
125	Trave	129	130	6	1	1					
126	Trave	130	131	6	1	1					
127	Trave	131	132	6	1	1					
128	Trave	132	133	6	1	1					
129	Trave	133	134	6	1	1					
130	Trave	134	135	6	1	1					
131	Trave	135	136	6	1	1					
132	Trave	136	137	6	1	1					
133	Trave	137	138	6	1	1					
134	Trave	138	139	6	1	1					
135	Trave	139	140	6	1	1					
136	Trave	140	141	6	1	1					
137	Trave	141	142	6	1	1					
138	Trave	142	143	6	1	1					
139	Trave	143	144	6	1	1					
140	Trave	144	145	6	1	1					
141	Trave	145	146	6	1	1					
142	Trave	146	147	6	1	1					
143	Trave	147	128	6	1	1					
144	Pilas.	128	148	157	2	1					
145	Pilas.	147	149	157	2	1					
146	Pilas.	146	150	157	2	1					
147	Pilas.	132	167	157	2	1					
148	Pilas.	145	154	157	2	1					
149	Pilas.	136	164	157	2	1					
150	Pilas.	144	158	157	2	1					
151	Pilas.	127	159	157	2	1					
152	Pilas.	143	162	157	2	1					
153	Pilas.	135	153	157	2	1					
154	Pilas.	142	166	157	2	1					
155	Pilas.	131	165	157	2	1					
156	Pilas.	141	152	157	2	1					
157	Pilas.	134	161	157	2	1					
158	Pilas.	140	157	157	2	1					
159	Pilas.	129	160	157	2	1					
160	Pilas.	139	163	157	2	1					
161	Pilas.	133	155	157	2	1					
162	Pilas.	138	168	157	2	1					
163	Pilas.	130	151	157	2	1					
164	Pilas.	137	156	157	2	1					
165	Trave	169	171	6	1	1					
166	Trave	171	172	6	1	1					
167	Trave	172	173	6	1	1					
168	Trave	173	174	6	1	1					
169	Trave	174	175	6	1	1					
170	Trave	175	176	6	1	1					
171	Trave	176	177	6	1	1					
172	Trave	177	178	6	1	1					
173	Trave	178	179	6	1	1					
174	Trave	179	180	6	1	1					
175	Trave	180	181	6	1	1					
176	Trave	181	182	6	1	1					
177	Trave	182	183	6	1	1					
178	Trave	183	184	6	1	1					
179	Trave	184	185	6	1	1					
180	Trave	185	186	6	1	1					
181	Trave	186	187	6	1	1					
182	Trave	187	188	6	1	1					

Elem.	Note	Nodo I	Nodo J	Mat.	Sez.	Crit.	Rotaz.	Svincolo I	Svincolo J	Wink V	Wink O
183	Trave	188	189	6	1	1					
184	Trave	189	170	6	1	1					
185	Pilas.	170	190	157	2	1					
186	Pilas.	189	191	157	2	1					
187	Pilas.	188	192	157	2	1					
188	Pilas.	174	209	157	2	1					
189	Pilas.	187	196	157	2	1					
190	Pilas.	178	206	157	2	1					
191	Pilas.	186	200	157	2	1					
192	Pilas.	169	201	157	2	1					
193	Pilas.	185	204	157	2	1					
194	Pilas.	177	195	157	2	1					
195	Pilas.	184	208	157	2	1					
196	Pilas.	173	207	157	2	1					
197	Pilas.	183	194	157	2	1					
198	Pilas.	176	203	157	2	1					
199	Pilas.	182	199	157	2	1					
200	Pilas.	171	202	157	2	1					
201	Pilas.	181	205	157	2	1					
202	Pilas.	175	197	157	2	1					
203	Pilas.	180	210	157	2	1					
204	Pilas.	172	193	157	2	1					
205	Pilas.	179	198	157	2	1					

4.5 MODELLAZIONE STRUTTURA: ELEMENTI SHELL

4.5.1 LEGENDA TABELLA DATI SHELL

Il programma utilizza per la modellazione elementi a tre o quattro nodi denominati in generale shell.
Ogni elemento shell è individuato dai nodi I, J, K, L (L=I per gli elementi a tre nodi).
Ogni elemento è caratterizzato da un insieme di proprietà riportate in tabella che ne completano la modellazione.

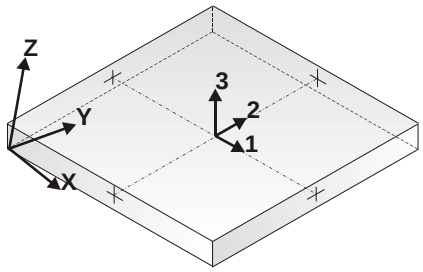

orientamento elementi 3D non verticali

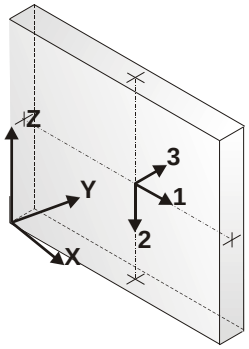

orientamento elementi 3D verticali

In particolare per ogni elemento viene indicato in tabella:

Elem.	numero dell'elemento
Note	codice di comportamento: *Guscio* (elemento guscio in elevazione non verticale) *Guscio fond.* (elemento guscio su suolo elastico) *Setto* (elemento guscio in elevazione verticale) *Membrana* (elemento guscio con comportamento membranale)
Nodo I (J, K, L)	numero del nodo I (J, K, L)
Mat.	codice del materiale assegnato all'elemento
Spessore	spessore dell'elemento (costante)
Wink V	costante di sottofondo (coefficiente di Winkler) per la modellazione del suolo elastico verticale
Wink O	costante di sottofondo (coefficiente di Winkler) per la modellazione del suolo elastico orizzontale

Elem.	Note	Nodo I	Nodo J	Nodo K	Nodo L	Mat.	Crit.	Spessore	Svincolo	Wink V	Wink O
								cm		daN/cm3	daN/cm3
1	Guscio	45	46	44	43	6	1	20.0			
2	Guscio	47	48	46	45	6	1	20.0			
3	Guscio	55	56	48	47	6	1	20.0			
4	Guscio	63	64	56	55	6	1	20.0			
5	Guscio	71	72	64	63	6	1	20.0			
6	Guscio	79	80	72	71	6	1	20.0			
7	Guscio	51	52	80	79	6	1	20.0			
8	Guscio	61	62	52	51	6	1	20.0			
9	Guscio	73	74	62	61	6	1	20.0			
10	Guscio	83	84	74	73	6	1	20.0			
11	Guscio	59	60	84	83	6	1	20.0			
12	Guscio	75	76	60	59	6	1	20.0			
13	Guscio	53	54	76	75	6	1	20.0			
14	Guscio	69	70	54	53	6	1	20.0			
15	Guscio	57	58	70	69	6	1	20.0			
16	Guscio	81	82	58	57	6	1	20.0			
17	Guscio	77	78	82	81	6	1	20.0			
18	Guscio	49	50	78	77	6	1	20.0			
19	Guscio	67	68	50	49	6	1	20.0			
20	Guscio	66	65	68	67	6	1	20.0			
21	Guscio	46	107	106	44	6	1	20.0			
22	Guscio	48	108	107	46	6	1	20.0			
23	Guscio	56	112	108	48	6	1	20.0			
24	Guscio	64	116	112	56	6	1	20.0			
25	Guscio	72	120	116	64	6	1	20.0			
26	Guscio	80	124	120	72	6	1	20.0			
27	Guscio	52	110	124	80	6	1	20.0			
28	Guscio	62	115	110	52	6	1	20.0			
29	Guscio	74	121	115	62	6	1	20.0			
30	Guscio	84	126	121	74	6	1	20.0			
31	Guscio	60	114	126	84	6	1	20.0			
32	Guscio	76	122	114	60	6	1	20.0			
33	Guscio	54	111	122	76	6	1	20.0			
34	Guscio	70	119	111	54	6	1	20.0			
35	Guscio	58	113	119	70	6	1	20.0			
36	Guscio	82	125	113	58	6	1	20.0			
37	Guscio	78	123	125	82	6	1	20.0			
38	Guscio	50	109	123	78	6	1	20.0			
39	Guscio	68	118	109	50	6	1	20.0			
40	Guscio	65	117	118	68	6	1	20.0			
41	Guscio	107	149	148	106	6	1	20.0			
42	Guscio	108	150	149	107	6	1	20.0			
43	Guscio	112	154	150	108	6	1	20.0			
44	Guscio	116	158	154	112	6	1	20.0			
45	Guscio	120	162	158	116	6	1	20.0			
46	Guscio	124	166	162	120	6	1	20.0			
47	Guscio	110	152	166	124	6	1	20.0			
48	Guscio	115	157	152	110	6	1	20.0			
49	Guscio	121	163	157	115	6	1	20.0			
50	Guscio	126	168	163	121	6	1	20.0			
51	Guscio	114	156	168	126	6	1	20.0			
52	Guscio	122	164	156	114	6	1	20.0			
53	Guscio	111	153	164	122	6	1	20.0			
54	Guscio	119	161	153	111	6	1	20.0			
55	Guscio	113	155	161	119	6	1	20.0			
56	Guscio	125	167	155	113	6	1	20.0			
57	Guscio	123	165	167	125	6	1	20.0			
58	Guscio	109	151	165	123	6	1	20.0			
59	Guscio	118	160	151	109	6	1	20.0			
60	Guscio	117	159	160	118	6	1	20.0			
61	Guscio	149	191	190	148	6	1	20.0			
62	Guscio	150	192	191	149	6	1	20.0			
63	Guscio	154	196	192	150	6	1	20.0			
64	Guscio	158	200	196	154	6	1	20.0			
65	Guscio	162	204	200	158	6	1	20.0			
66	Guscio	166	208	204	162	6	1	20.0			
67	Guscio	152	194	208	166	6	1	20.0			
68	Guscio	157	199	194	152	6	1	20.0			
69	Guscio	163	205	199	157	6	1	20.0			
70	Guscio	168	210	205	163	6	1	20.0			
71	Guscio	156	198	210	168	6	1	20.0			
72	Guscio	164	206	198	156	6	1	20.0			
73	Guscio	153	195	206	164	6	1	20.0			
74	Guscio	161	203	195	153	6	1	20.0			

Elem.	Note	Nodo I	Nodo J	Nodo K	Nodo L	Mat.	Crit.	Spessore	Svincolo	Wink V	Wink O
75	Guscio	155	197	203	161	6	1	20.0			
76	Guscio	167	209	197	155	6	1	20.0			
77	Guscio	165	207	209	167	6	1	20.0			
78	Guscio	151	193	207	165	6	1	20.0			
79	Guscio	160	202	193	151	6	1	20.0			
80	Guscio	159	201	202	160	6	1	20.0			
81	Guscio	212	45	43	211	6	1	20.0			
82	Guscio	214	47	45	212	6	1	20.0			
83	Guscio	216	55	47	214	6	1	20.0			
84	Guscio	218	63	55	216	6	1	20.0			
85	Guscio	220	71	63	218	6	1	20.0			
86	Guscio	222	79	71	220	6	1	20.0			
87	Guscio	224	51	79	222	6	1	20.0			
88	Guscio	226	61	51	224	6	1	20.0			
89	Guscio	228	73	61	226	6	1	20.0			
90	Guscio	230	83	73	228	6	1	20.0			
91	Guscio	213	59	83	230	6	1	20.0			
92	Guscio	217	75	59	213	6	1	20.0			
93	Guscio	219	53	75	217	6	1	20.0			
94	Guscio	221	69	53	219	6	1	20.0			
95	Guscio	225	57	69	221	6	1	20.0			
96	Guscio	227	81	57	225	6	1	20.0			
97	Guscio	229	77	81	227	6	1	20.0			
98	Guscio	215	49	77	229	6	1	20.0			
99	Guscio	223	67	49	215	6	1	20.0			
100	Guscio	231	66	67	223	6	1	20.0			
101	Guscio	191	232	233	190	6	1	20.0			
102	Guscio	192	234	232	191	6	1	20.0			
103	Guscio	196	235	234	192	6	1	20.0			
104	Guscio	200	236	235	196	6	1	20.0			
105	Guscio	204	237	236	200	6	1	20.0			
106	Guscio	208	238	237	204	6	1	20.0			
107	Guscio	194	239	238	208	6	1	20.0			
108	Guscio	199	240	239	194	6	1	20.0			
109	Guscio	205	241	240	199	6	1	20.0			
110	Guscio	210	242	241	205	6	1	20.0			
111	Guscio	198	243	242	210	6	1	20.0			
112	Guscio	206	244	243	198	6	1	20.0			
113	Guscio	195	245	244	206	6	1	20.0			
114	Guscio	203	246	245	195	6	1	20.0			
115	Guscio	197	247	246	203	6	1	20.0			
116	Guscio	209	248	247	197	6	1	20.0			
117	Guscio	207	249	248	209	6	1	20.0			
118	Guscio	193	250	249	207	6	1	20.0			
119	Guscio	202	251	250	193	6	1	20.0			
120	Guscio	201	252	251	202	6	1	20.0			

4.6 MODELLAZIONE DELLE AZIONI

4.6.1 LEGENDA TABELLA DATI AZIONI

Il programma consente l'uso di diverse tipologie di carico (azioni). Le azioni utilizzate nella modellazione sono individuate da una sigla identificativa ed un codice numerico (gli elementi strutturali richiamano quest'ultimo nella propria descrizione). Per ogni azione applicata alla struttura viene di riportato il codice, il tipo e la sigla identificativa. Le tabelle successive dettagliano i valori caratteristici di ogni azione in relazione al tipo. Le tabelle riportano infatti i seguenti dati in relazione al tipo:

1	**carico concentrato nodale** 6 dati (forza Fx, Fy, Fz, momento Mx, My, Mz)
2	**spostamento nodale impresso** 6 dati (spostamento Tx,Ty,Tz, rotazione Rx,Ry,Rz)
3	**carico distribuito globale su elemento tipo trave** 7 dati (fx,fy,fz,mx,my,mz,ascissa di inizio carico) 7 dati (fx,fy,fz,mx,my,mz,ascissa di fine carico)
4	**carico distribuito locale su elemento tipo trave** 7 dati (f1,f2,f3,m1,m2,m3,ascissa di inizio carico) 7 dati (f1,f2,f3,m1,m2,m3,ascissa di fine carico)
5	**carico concentrato globale su elemento tipo trave** 7 dati (Fx,Fy,Fz,Mx,My,Mz,ascissa di carico)
6	**carico concentrato locale su elemento tipo trave** 7 dati (F1, F2, F3, M1, M2, M3, ascissa di carico)
7	**variazione termica applicata ad elemento tipo trave** 7 dati (variazioni termiche: uniforme, media e differenza in altezza e larghezza al nodo iniziale e finale)
8	**carico di pressione uniforme su elemento tipo piastra** 1 dato (pressione)
9	**carico di pressione variabile su elemento tipo piastra** 4 dati (pressione, quota, pressione, quota)
10	**variazione termica applicata ad elemento tipo piastra** 2 dati (variazioni termiche: media e differenza nello spessore)
11	**carico variabile generale su elementi tipo trave e piastra** 1 dato descrizione della tipologia 4 dati per segmento (posizione, valore, posizione, valore) la tipologia precisa l'ascissa di definizione, la direzione del carico, la modalità di carico e la larghezza d'influenza per gli elementi tipo trave
12	**gruppo di carichi con impronta su piastra** 9 dati (numero di ripetizioni in direzione X e Y, valore di ciascun carico, posizione centrale del primo, dimensioni dell' impronta, interasse tra i carichi

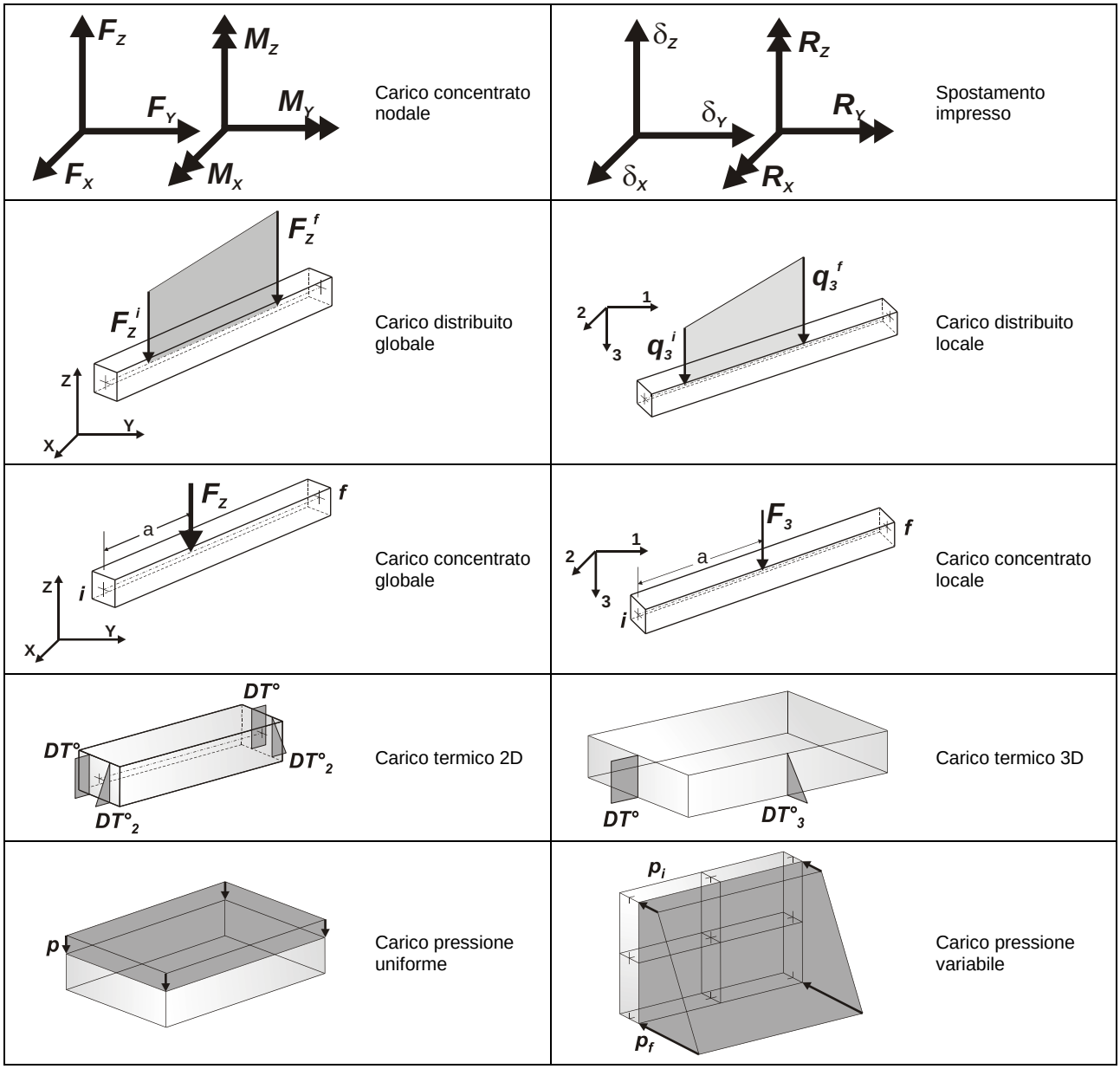

Tipo	carico di pressione uniforme su piastra

Id	Tipo	pressione
		daN/cm2
7	QVK PAN ++ vento*0.4 (da personalizzare)-P3:p=3.200e-03	3.20e-03
8	QVK PAN -- vento*0.4 (da personalizzare)-P3:p=3.200e-03	3.20e-03

Tipo	carico variabile generale

Id	Tipo	ascissa	valore	ascissa	valore
		cm	daN/cm2	cm	daN/cm2
1	CARICO FRENATURA Q3k -QV:var x - Qy - Area				
	X - X Qy Area L2=0.0	-1.000e+05	-0.08	1.000e+05	-0.08

Id	Tipo	ascissa	valore	ascissa	valore
2	CARICO TRAFFICO Q1k 9 kN/MQ-QV:var x - Qz - Area				
	X - X Qz Area L2=0.0	-1.000e+05	-0.09	1.000e+05	-0.09
3	CARICO TRAFFICO Q1k 150 kN-QV:var x - Qz - Area				
	X - X Qz Area L2=0.0	-1.000e+05	-2.94	1.000e+05	-2.94
4	G2 PERMANTE 1 kN/MQ-QV:var x - Qz - Area				
	X - X Qz Area L2=0.0	-1.000e+05	-0.01	1.000e+05	-0.09

4.7 SCHEMATIZZAZIONE DEI CASI DI CARICO

4.7.1 LEGENDA TABELLA CASI DI CARICO

Il programma consente l'applicazione di diverse tipologie di casi di carico.
Sono previsti i seguenti 11 tipi di casi di carico:

	Sigla	*Tipo*	*Descrizione*
1	**Ggk**	A	caso di carico comprensivo del peso proprio struttura
2	**Gk**	NA	caso di carico con azioni permanenti
3	**Qk**	NA	caso di carico con azioni variabili
4	**Gsk**	A	caso di carico comprensivo dei carichi permanenti sui solai e sulle coperture
5	**Qsk**	A	caso di carico comprensivo dei carichi variabili sui solai
6	**Qnk**	A	caso di carico comprensivo dei carichi di neve sulle coperture
7	**Qtk**	SA	caso di carico comprensivo di una variazione termica agente sulla struttura
8	**Qvk**	NA	caso di carico comprensivo di azioni da vento sulla struttura
9	**Esk**	SA	caso di carico sismico con analisi statica equivalente
10	**Edk**	SA	caso di carico sismico con analisi dinamica
11	**Etk**	NA	caso di carico comprensivo di azioni derivanti dall' incremento di spinta delle terre in condizione sismica
12	**Pk**	NA	caso di carico comprensivo di azioni derivanti da coazioni, cedimenti e precompressioni

Sono di tipo automatico A (ossia non prevedono introduzione dati da parte dell'utente) i seguenti casi di carico: 1-Ggk; 4-Gsk; 5-Qsk; 6-Qnk.

Sono di tipo semi-automatico SA (ossia prevedono una minima introduzione dati da parte dell'utente) i seguenti casi di carico:
7-Qtk, in quanto richiede solo il valore della variazione termica;
9-Esk e 10-Edk, in quanto richiedono il valore dell'angolo di ingresso del sisma e l'individuazione dei casi di carico partecipanti alla definizione delle masse.

Sono di tipo non automatico NA ossia prevedono la diretta applicazione di carichi generici agli elementi strutturali (si veda il precedente punto Modellazione delle Azioni) i restanti casi di carico.

Nella tabella successiva vengono riportati i casi di carico agenti sulla struttura, con l'indicazione dei dati relativi al caso di carico stesso: *Numero Tipo* e *Sigla identificativa*, *Valore di riferimento* del caso di carico (se previsto).

In successione, per i casi di carico non automatici, viene riportato l'elenco di nodi ed elementi direttamente caricati con la sigla identificativa del carico.

Per i casi di carico di tipo sismico (9-Esk e 10-Edk), viene riportata la tabella di definizione delle masse: per ogni caso di carico partecipante alla definizione delle masse viene indicata la relativa aliquota (partecipazione) considerata. Si precisa che per i caso di carico 5-Qsk e 6-Qnk la partecipazione è prevista localmente per ogni elemento solaio o copertura presente nel modello (si confronti il valore Sksol nel capitolo relativo agli elementi solaio) e pertanto la loro partecipazione è di norma pari a uno.

CDC	Tipo	Sigla Id	Note
1	Ggk	CDC=Ggk (peso proprio della struttura)	
2	Edk	CDC=Ed (dinamico SLU) alfa=0.0 (ecc. +)	partecipazione:1.00 per 1 CDC=Ggk (peso proprio della struttura)
3	Edk	CDC=Ed (dinamico SLU) alfa=0.0 (ecc. -)	come precedente CDC sismico
4	Edk	CDC=Ed (dinamico SLU) alfa=90.00 (ecc. +)	come precedente CDC sismico
5	Edk	CDC=Ed (dinamico SLU) alfa=90.00 (ecc. -)	come precedente CDC sismico
6	Edk	CDC=Ed (dinamico SLD) alfa=0.0 (ecc. +)	come precedente CDC sismico
7	Edk	CDC=Ed (dinamico SLD) alfa=0.0 (ecc. -)	come precedente CDC sismico
8	Edk	CDC=Ed (dinamico SLD) alfa=90.00 (ecc. +)	come precedente CDC sismico
9	Edk	CDC=Ed (dinamico SLD) alfa=90.00 (ecc. -)	come precedente CDC sismico
10	Qk	CDC=Qk TRAFFICO	Azioni applicate:
			D3 :da 1 a 120 Azione : CARICO TRAFFICO Q1k 9 kN/MQ-QV:var x - Qz - Area
			D3 :da 1 a 120 Azione : CARICO FRENATURA Q3k -QV:var x - Qy - Area
11	Qvk	CDC=Qvk (carico da vento) dir X +	Azioni applicate:
			D3 :da 1 a 120 Azione : QVK PAN ++ vento*0.4 (da personalizzare)-P3:p=3.200e-03
12	Qvk	CDC=Qvk (carico da vento) dir X -	Azioni applicate:
			D3 :da 1 a 120 Azione : QVK PAN -- vento*0.4 (da personalizzare)-P3:p=3.200e-03
13	Qvk	CDC=Qvk (carico da vento) dir Y +	Azioni applicate:
			D3 :da 1 a 120 Azione : QVK PAN -- vento*0.4 (da personalizzare)-P3:p=3.200e-03
14	Qvk	CDC=Qvk (carico da vento) dir Y -	Azioni applicate:
			D3 :da 1 a 120 Azione : QVK PAN -- vento*0.4 (da personalizzare)-P3:p=3.200e-03
15	Gk	CDC=G2k (permanente generico)	Azioni applicate:
			D3 :da 1 a 120 Azione : G2 PERMANTE 1 kN/MQ-QV:var x - Qz - Area

4.8 DEFINIZIONE DELLE COMBINAZIONI

4.8.1 LEGENDA TABELLA COMBINAZIONI DI CARICO

Il programma combina i diversi tipi di casi di carico (CDC) secondo le regole previste dalla normativa vigente.
Le combinazioni previste sono destinate al controllo di sicurezza della struttura ed alla verifica degli spostamenti e delle sollecitazioni.

La prima tabella delle combinazioni riportata di seguito comprende le seguenti informazioni: Numero, Tipo, Sigla identificativa. Una seconda tabella riporta il peso nella combinazione assunto per ogni caso di carico.

Ai fini delle verifiche degli stati limite si definiscono le seguenti combinazioni delle azioni:
***Combinazione fondamentale** SLU*
$\gamma_{G1} \cdot G_1 + \gamma_{G2} \cdot G_2 + \gamma_P \cdot P + \gamma_{Q1} \cdot Q_{k1} + \gamma_{Q2} \cdot \psi_{02} \cdot Q_{k2} + \gamma_{Q3} \cdot \psi_{03} \cdot Q_{k3} + \ldots$
***Combinazione caratteristica** (rara) SLE*
$G_1 + G_2 + P + Q_{k1} + \psi_{02} \cdot Q_{k2} + \psi_{03} \cdot Q_{k3} + \ldots$
***Combinazione frequente** SLE*
$G_1 + G_2 + P + \psi_{11} \cdot Q_{k1} + \psi_{22} \cdot Q_{k2} + \psi_{23} \cdot Q_{k3} + \ldots$
***Combinazione quasi permanente** SLE*
$G1 + G2 + P + \psi_{21} \cdot Q_{k1} + \psi_{22} \cdot Q_{k2} + \psi_{23} \cdot Q_{k3} + \ldots$
***Combinazione sismica**, impiegata per gli stati limite ultimi e di esercizio connessi all'azione sismica E*
$E + G_1 + G_2 + P + \psi_{21} \cdot Q_{k1} + \psi_{22} \cdot Q_{k2} + \ldots$
***Combinazione eccezionale**, impiegata per gli stati limite connessi alle azioni eccezionali*
$G_1 + G_2 + A_d + P + \psi_{21} \cdot Q_{k1} + \psi_{22} \cdot Q_{k2} + \ldots$

Dove:

NTC 2018 Tabella 2.5.I

Destinazione d'uso/azione	**ψ0**	**ψ1**	**ψ2**
Categoria A residenziali	0,70	0,50	0,30
Categoria B uffici	0,70	0,50	0,30
Categoria C ambienti suscettibili di affollamento	0,70	0,70	0,60
Categoria D ambienti ad uso commerciale	0,70	0,70	0,60
Categoria E biblioteche, archivi, magazzini,…	1,00	0,90	0,80
Categoria F Rimesse e parcheggi (autoveicoli <= 30kN)	0,70	0,70	0,60
Categoria G Rimesse e parcheggi (autoveicoli > 30kN)	0,70	0,50	0,30
Categoria H Coperture	0,00	0,00	0,00
Vento	0,60	0,20	0,00
Neve a quota <= 1000 m	0,50	0,20	0,00
Neve a quota > 1000 m	0,70	0,50	0,20
Variazioni Termiche	0,60	0,50	0,00

Nelle verifiche possono essere adottati in alternativa due diversi approcci progettuali:
- per l'approccio 1 si considerano due diverse combinazioni di gruppi di coefficienti di sicurezza parziali per le azioni, per i materiali e per la resistenza globale (combinazione 1 con coefficienti A1 e combinazione 2 con coefficienti A2),
- per l'approccio 2 si definisce un'unica combinazione per le azioni, per la resistenza dei materiali e per la resistenza globale (con coefficienti A1).

NTC 2018 Tabella 2.6.I

		Coefficiente γf	**EQU**	**A1**	**A2**
Carichi permanenti	Favorevoli Sfavorevoli	γG1	0,9 1,1	1,0 1,3	1,0 1,0
Carichi permanenti non strutturali (Non compiutamente definiti)	Favorevoli Sfavorevoli	γG2	0,8 1,5	0,8 1,5	0,8 1,3
Carichi variabili	Favorevoli Sfavorevoli	γQi	0,0 1,5	0,0 1,5	0,0 1,3

Cmb	Tipo	Sigla Id	effetto P-delta
1	SLU	Comb. SLU A1 1	
2	SLU	Comb. SLU A1 2	
3	SLU	Comb. SLU A1 3	
4	SLU	Comb. SLU A1 4	
5	SLU	Comb. SLU A1 5	
6	SLU	Comb. SLU A1 6	
7	SLU	Comb. SLU A1 7	
8	SLU	Comb. SLU A1 8	

Cmb	Tipo	Sigla Id	effetto P-delta
9	SLU	Comb. SLU A1 9	
10	SLU	Comb. SLU A1 10	
11	SLU	Comb. SLU A1 11	
12	SLU	Comb. SLU A1 12	
13	SLU	Comb. SLU A1 13	
14	SLU	Comb. SLU A1 14	
15	SLU	Comb. SLU A1 15	
16	SLU	Comb. SLU A1 16	
17	SLU	Comb. SLU A1 17	
18	SLU	Comb. SLU A1 18	
19	SLU	Comb. SLU A1 19	
20	SLU	Comb. SLU A1 20	
21	SLU	Comb. SLU A1 (SLV sism.) 21	
22	SLU	Comb. SLU A1 (SLV sism.) 22	
23	SLU	Comb. SLU A1 (SLV sism.) 23	
24	SLU	Comb. SLU A1 (SLV sism.) 24	
25	SLU	Comb. SLU A1 (SLV sism.) 25	
26	SLU	Comb. SLU A1 (SLV sism.) 26	
27	SLU	Comb. SLU A1 (SLV sism.) 27	
28	SLU	Comb. SLU A1 (SLV sism.) 28	
29	SLU	Comb. SLU A1 (SLV sism.) 29	
30	SLU	Comb. SLU A1 (SLV sism.) 30	
31	SLU	Comb. SLU A1 (SLV sism.) 31	
32	SLU	Comb. SLU A1 (SLV sism.) 32	
33	SLU	Comb. SLU A1 (SLV sism.) 33	
34	SLU	Comb. SLU A1 (SLV sism.) 34	
35	SLU	Comb. SLU A1 (SLV sism.) 35	
36	SLU	Comb. SLU A1 (SLV sism.) 36	
37	SLU	Comb. SLU A1 (SLV sism.) 37	
38	SLU	Comb. SLU A1 (SLV sism.) 38	
39	SLU	Comb. SLU A1 (SLV sism.) 39	
40	SLU	Comb. SLU A1 (SLV sism.) 40	
41	SLU	Comb. SLU A1 (SLV sism.) 41	
42	SLU	Comb. SLU A1 (SLV sism.) 42	
43	SLU	Comb. SLU A1 (SLV sism.) 43	
44	SLU	Comb. SLU A1 (SLV sism.) 44	
45	SLU	Comb. SLU A1 (SLV sism.) 45	
46	SLU	Comb. SLU A1 (SLV sism.) 46	
47	SLU	Comb. SLU A1 (SLV sism.) 47	
48	SLU	Comb. SLU A1 (SLV sism.) 48	
49	SLU	Comb. SLU A1 (SLV sism.) 49	
50	SLU	Comb. SLU A1 (SLV sism.) 50	
51	SLU	Comb. SLU A1 (SLV sism.) 51	
52	SLU	Comb. SLU A1 (SLV sism.) 52	
53	SLD(sis)	Comb. SLE (SLD Danno sism.) 53	
54	SLD(sis)	Comb. SLE (SLD Danno sism.) 54	
55	SLD(sis)	Comb. SLE (SLD Danno sism.) 55	
56	SLD(sis)	Comb. SLE (SLD Danno sism.) 56	
57	SLD(sis)	Comb. SLE (SLD Danno sism.) 57	
58	SLD(sis)	Comb. SLE (SLD Danno sism.) 58	
59	SLD(sis)	Comb. SLE (SLD Danno sism.) 59	
60	SLD(sis)	Comb. SLE (SLD Danno sism.) 60	
61	SLD(sis)	Comb. SLE (SLD Danno sism.) 61	
62	SLD(sis)	Comb. SLE (SLD Danno sism.) 62	
63	SLD(sis)	Comb. SLE (SLD Danno sism.) 63	
64	SLD(sis)	Comb. SLE (SLD Danno sism.) 64	
65	SLD(sis)	Comb. SLE (SLD Danno sism.) 65	
66	SLD(sis)	Comb. SLE (SLD Danno sism.) 66	
67	SLD(sis)	Comb. SLE (SLD Danno sism.) 67	
68	SLD(sis)	Comb. SLE (SLD Danno sism.) 68	
69	SLD(sis)	Comb. SLE (SLD Danno sism.) 69	
70	SLD(sis)	Comb. SLE (SLD Danno sism.) 70	
71	SLD(sis)	Comb. SLE (SLD Danno sism.) 71	
72	SLD(sis)	Comb. SLE (SLD Danno sism.) 72	
73	SLD(sis)	Comb. SLE (SLD Danno sism.) 73	
74	SLD(sis)	Comb. SLE (SLD Danno sism.) 74	
75	SLD(sis)	Comb. SLE (SLD Danno sism.) 75	
76	SLD(sis)	Comb. SLE (SLD Danno sism.) 76	
77	SLD(sis)	Comb. SLE (SLD Danno sism.) 77	
78	SLD(sis)	Comb. SLE (SLD Danno sism.) 78	
79	SLD(sis)	Comb. SLE (SLD Danno sism.) 79	
80	SLD(sis)	Comb. SLE (SLD Danno sism.) 80	
81	SLD(sis)	Comb. SLE (SLD Danno sism.) 81	
82	SLD(sis)	Comb. SLE (SLD Danno sism.) 82	
83	SLD(sis)	Comb. SLE (SLD Danno sism.) 83	

Cmb	Tipo	Sigla Id	effetto P-delta
84	SLD(sis)	Comb. SLE (SLD Danno sism.) 84	
85	SLU(acc.)	Comb. SLU (Accid.) 85	
86	SLE(r)	Comb. SLE(rara) 86	
87	SLE(r)	Comb. SLE(rara) 87	
88	SLE(r)	Comb. SLE(rara) 88	
89	SLE(r)	Comb. SLE(rara) 89	
90	SLE(r)	Comb. SLE(rara) 90	
91	SLE(r)	Comb. SLE(rara) 91	
92	SLE(r)	Comb. SLE(rara) 92	
93	SLE(r)	Comb. SLE(rara) 93	
94	SLE(r)	Comb. SLE(rara) 94	
95	SLE(r)	Comb. SLE(rara) 95	
96	SLE(f)	Comb. SLE(freq.) 96	
97	SLE(f)	Comb. SLE(freq.) 97	
98	SLE(f)	Comb. SLE(freq.) 98	
99	SLE(f)	Comb. SLE(freq.) 99	
100	SLE(f)	Comb. SLE(freq.) 100	
101	SLE(f)	Comb. SLE(freq.) 101	
102	SLE(p)	Comb. SLE(perm.) 102	

Cmb	CDC 1/15...	CDC 2/16...	CDC 3/17...	CDC 4/18...	CDC 5/19...	CDC 6/20...	CDC 7/21...	CDC 8/22...	CDC 9/23...	CDC 10/24...	CDC 11/25...	CDC 12/26...	CDC 13/27...	CDC 14/28...
1	1.30	0.0	0.0	0.0	0.0	0.0	0.0	0.0	0.0	0.0	0.90	0.90	0.90	0.90
	1.30													
2	1.30	0.0	0.0	0.0	0.0	0.0	0.0	0.0	0.0	1.50	0.90	0.90	0.90	0.90
	1.30													
3	1.00	0.0	0.0	0.0	0.0	0.0	0.0	0.0	0.0	0.0	0.90	0.90	0.90	0.90
	1.00													
4	1.00	0.0	0.0	0.0	0.0	0.0	0.0	0.0	0.0	1.50	0.90	0.90	0.90	0.90
	1.00													
5	1.30	0.0	0.0	0.0	0.0	0.0	0.0	0.0	0.0	0.0	1.50	0.90	0.90	0.90
	1.30													
6	1.30	0.0	0.0	0.0	0.0	0.0	0.0	0.0	0.0	1.50	1.50	0.90	0.90	0.90
	1.30													
7	1.00	0.0	0.0	0.0	0.0	0.0	0.0	0.0	0.0	0.0	1.50	0.90	0.90	0.90
	1.00													
8	1.00	0.0	0.0	0.0	0.0	0.0	0.0	0.0	0.0	1.50	1.50	0.90	0.90	0.90
	1.00													
9	1.30	0.0	0.0	0.0	0.0	0.0	0.0	0.0	0.0	0.0	0.90	1.50	0.90	0.90
	1.30													
10	1.30	0.0	0.0	0.0	0.0	0.0	0.0	0.0	0.0	1.50	0.90	1.50	0.90	0.90
	1.30													
11	1.00	0.0	0.0	0.0	0.0	0.0	0.0	0.0	0.0	0.0	0.90	1.50	0.90	0.90
	1.00													
12	1.00	0.0	0.0	0.0	0.0	0.0	0.0	0.0	0.0	1.50	0.90	1.50	0.90	0.90
	1.00													
13	1.30	0.0	0.0	0.0	0.0	0.0	0.0	0.0	0.0	0.0	0.90	0.90	1.50	0.90
	1.30													
14	1.30	0.0	0.0	0.0	0.0	0.0	0.0	0.0	0.0	1.50	0.90	0.90	1.50	0.90
	1.30													
15	1.00	0.0	0.0	0.0	0.0	0.0	0.0	0.0	0.0	0.0	0.90	0.90	1.50	0.90
	1.00													
16	1.00	0.0	0.0	0.0	0.0	0.0	0.0	0.0	0.0	1.50	0.90	0.90	1.50	0.90
	1.00													
17	1.30	0.0	0.0	0.0	0.0	0.0	0.0	0.0	0.0	0.0	0.90	0.90	0.90	1.50
	1.30													
18	1.30	0.0	0.0	0.0	0.0	0.0	0.0	0.0	0.0	1.50	0.90	0.90	0.90	1.50
	1.30													
19	1.00	0.0	0.0	0.0	0.0	0.0	0.0	0.0	0.0	0.0	0.90	0.90	0.90	1.50
	1.00													
20	1.00	0.0	0.0	0.0	0.0	0.0	0.0	0.0	0.0	1.50	0.90	0.90	0.90	1.50
	1.00													
21	1.00	-1.00	0.0	-0.30	0.0	0.0	0.0	0.0	0.0	0.0	0.0	0.0	0.0	0.0
	1.00													
22	1.00	-1.00	0.0	0.30	0.0	0.0	0.0	0.0	0.0	0.0	0.0	0.0	0.0	0.0
	1.00													
23	1.00	1.00	0.0	-0.30	0.0	0.0	0.0	0.0	0.0	0.0	0.0	0.0	0.0	0.0
	1.00													
24	1.00	1.00	0.0	0.30	0.0	0.0	0.0	0.0	0.0	0.0	0.0	0.0	0.0	0.0
	1.00													
25	1.00	-1.00	0.0	0.0	-0.30	0.0	0.0	0.0	0.0	0.0	0.0	0.0	0.0	0.0

Cmb	CDC 1/15...	CDC 2/16...	CDC 3/17...	CDC 4/18...	CDC 5/19...	CDC 6/20...	CDC 7/21...	CDC 8/22...	CDC 9/23...	CDC 10/24...	CDC 11/25...	CDC 12/26...	CDC 13/27...	CDC 14/28...
	1.00													
26	1.00	-1.00	0.0	0.0	0.30	0.0	0.0	0.0	0.0	0.0	0.0	0.0	0.0	0.0
	1.00													
27	1.00	1.00	0.0	0.0	-0.30	0.0	0.0	0.0	0.0	0.0	0.0	0.0	0.0	0.0
	1.00													
28	1.00	1.00	0.0	0.0	0.30	0.0	0.0	0.0	0.0	0.0	0.0	0.0	0.0	0.0
	1.00													
29	1.00	0.0	-1.00	-0.30	0.0	0.0	0.0	0.0	0.0	0.0	0.0	0.0	0.0	0.0
	1.00													
30	1.00	0.0	-1.00	0.30	0.0	0.0	0.0	0.0	0.0	0.0	0.0	0.0	0.0	0.0
	1.00													
31	1.00	0.0	1.00	-0.30	0.0	0.0	0.0	0.0	0.0	0.0	0.0	0.0	0.0	0.0
	1.00													
32	1.00	0.0	1.00	0.30	0.0	0.0	0.0	0.0	0.0	0.0	0.0	0.0	0.0	0.0
	1.00													
33	1.00	0.0	-1.00	0.0	-0.30	0.0	0.0	0.0	0.0	0.0	0.0	0.0	0.0	0.0
	1.00													
34	1.00	0.0	-1.00	0.0	0.30	0.0	0.0	0.0	0.0	0.0	0.0	0.0	0.0	0.0
	1.00													
35	1.00	0.0	1.00	0.0	-0.30	0.0	0.0	0.0	0.0	0.0	0.0	0.0	0.0	0.0
	1.00													
36	1.00	0.0	1.00	0.0	0.30	0.0	0.0	0.0	0.0	0.0	0.0	0.0	0.0	0.0
	1.00													
37	1.00	-0.30	0.0	-1.00	0.0	0.0	0.0	0.0	0.0	0.0	0.0	0.0	0.0	0.0
	1.00													
38	1.00	-0.30	0.0	1.00	0.0	0.0	0.0	0.0	0.0	0.0	0.0	0.0	0.0	0.0
	1.00													
39	1.00	0.30	0.0	-1.00	0.0	0.0	0.0	0.0	0.0	0.0	0.0	0.0	0.0	0.0
	1.00													
40	1.00	0.30	0.0	1.00	0.0	0.0	0.0	0.0	0.0	0.0	0.0	0.0	0.0	0.0
	1.00													
41	1.00	0.0	-0.30	-1.00	0.0	0.0	0.0	0.0	0.0	0.0	0.0	0.0	0.0	0.0
	1.00													
42	1.00	0.0	-0.30	1.00	0.0	0.0	0.0	0.0	0.0	0.0	0.0	0.0	0.0	0.0
	1.00													
43	1.00	0.0	0.30	-1.00	0.0	0.0	0.0	0.0	0.0	0.0	0.0	0.0	0.0	0.0
	1.00													
44	1.00	0.0	0.30	1.00	0.0	0.0	0.0	0.0	0.0	0.0	0.0	0.0	0.0	0.0
	1.00													
45	1.00	-0.30	0.0	0.0	-1.00	0.0	0.0	0.0	0.0	0.0	0.0	0.0	0.0	0.0
	1.00													
46	1.00	-0.30	0.0	0.0	1.00	0.0	0.0	0.0	0.0	0.0	0.0	0.0	0.0	0.0
	1.00													
47	1.00	0.30	0.0	0.0	-1.00	0.0	0.0	0.0	0.0	0.0	0.0	0.0	0.0	0.0
	1.00													
48	1.00	0.30	0.0	0.0	1.00	0.0	0.0	0.0	0.0	0.0	0.0	0.0	0.0	0.0
	1.00													
49	1.00	0.0	-0.30	0.0	-1.00	0.0	0.0	0.0	0.0	0.0	0.0	0.0	0.0	0.0
	1.00													
50	1.00	0.0	-0.30	0.0	1.00	0.0	0.0	0.0	0.0	0.0	0.0	0.0	0.0	0.0
	1.00													
51	1.00	0.0	0.30	0.0	-1.00	0.0	0.0	0.0	0.0	0.0	0.0	0.0	0.0	0.0
	1.00													
52	1.00	0.0	0.30	0.0	1.00	0.0	0.0	0.0	0.0	0.0	0.0	0.0	0.0	0.0
	1.00													
53	1.00	0.0	0.0	0.0	0.0	-1.00	0.0	-0.30	0.0	0.0	0.0	0.0	0.0	0.0
	1.00													
54	1.00	0.0	0.0	0.0	0.0	-1.00	0.0	0.30	0.0	0.0	0.0	0.0	0.0	0.0
	1.00													
55	1.00	0.0	0.0	0.0	0.0	1.00	0.0	-0.30	0.0	0.0	0.0	0.0	0.0	0.0
	1.00													
56	1.00	0.0	0.0	0.0	0.0	1.00	0.0	0.30	0.0	0.0	0.0	0.0	0.0	0.0
	1.00													
57	1.00	0.0	0.0	0.0	0.0	-1.00	0.0	0.0	-0.30	0.0	0.0	0.0	0.0	0.0
	1.00													
58	1.00	0.0	0.0	0.0	0.0	-1.00	0.0	0.0	0.30	0.0	0.0	0.0	0.0	0.0
	1.00													
59	1.00	0.0	0.0	0.0	0.0	1.00	0.0	0.0	-0.30	0.0	0.0	0.0	0.0	0.0
	1.00													
60	1.00	0.0	0.0	0.0	0.0	1.00	0.0	0.0	0.30	0.0	0.0	0.0	0.0	0.0
	1.00													
61	1.00	0.0	0.0	0.0	0.0	0.0	-1.00	-0.30	0.0	0.0	0.0	0.0	0.0	0.0
	1.00													
62	1.00	0.0	0.0	0.0	0.0	0.0	-1.00	0.30	0.0	0.0	0.0	0.0	0.0	0.0

Cmb	CDC 1/15...	CDC 2/16...	CDC 3/17...	CDC 4/18...	CDC 5/19...	CDC 6/20...	CDC 7/21...	CDC 8/22...	CDC 9/23...	CDC 10/24...	CDC 11/25...	CDC 12/26...	CDC 13/27...	CDC 14/28...
	1.00													
63	1.00	0.0	0.0	0.0	0.0	0.0	1.00	-0.30	0.0	0.0	0.0	0.0	0.0	0.0
	1.00													
64	1.00	0.0	0.0	0.0	0.0	0.0	1.00	0.30	0.0	0.0	0.0	0.0	0.0	0.0
	1.00													
65	1.00	0.0	0.0	0.0	0.0	0.0	-1.00	0.0	-0.30	0.0	0.0	0.0	0.0	0.0
	1.00													
66	1.00	0.0	0.0	0.0	0.0	0.0	-1.00	0.0	0.30	0.0	0.0	0.0	0.0	0.0
	1.00													
67	1.00	0.0	0.0	0.0	0.0	0.0	1.00	0.0	-0.30	0.0	0.0	0.0	0.0	0.0
	1.00													
68	1.00	0.0	0.0	0.0	0.0	0.0	1.00	0.0	0.30	0.0	0.0	0.0	0.0	0.0
	1.00													
69	1.00	0.0	0.0	0.0	0.0	-0.30	0.0	-1.00	0.0	0.0	0.0	0.0	0.0	0.0
	1.00													
70	1.00	0.0	0.0	0.0	0.0	-0.30	0.0	1.00	0.0	0.0	0.0	0.0	0.0	0.0
	1.00													
71	1.00	0.0	0.0	0.0	0.0	0.30	0.0	-1.00	0.0	0.0	0.0	0.0	0.0	0.0
	1.00													
72	1.00	0.0	0.0	0.0	0.0	0.30	0.0	1.00	0.0	0.0	0.0	0.0	0.0	0.0
	1.00													
73	1.00	0.0	0.0	0.0	0.0	0.0	-0.30	-1.00	0.0	0.0	0.0	0.0	0.0	0.0
	1.00													
74	1.00	0.0	0.0	0.0	0.0	0.0	-0.30	1.00	0.0	0.0	0.0	0.0	0.0	0.0
	1.00													
75	1.00	0.0	0.0	0.0	0.0	0.0	0.30	-1.00	0.0	0.0	0.0	0.0	0.0	0.0
	1.00													
76	1.00	0.0	0.0	0.0	0.0	0.0	0.30	1.00	0.0	0.0	0.0	0.0	0.0	0.0
	1.00													
77	1.00	0.0	0.0	0.0	0.0	-0.30	0.0	0.0	-1.00	0.0	0.0	0.0	0.0	0.0
	1.00													
78	1.00	0.0	0.0	0.0	0.0	-0.30	0.0	0.0	1.00	0.0	0.0	0.0	0.0	0.0
	1.00													
79	1.00	0.0	0.0	0.0	0.0	0.30	0.0	0.0	-1.00	0.0	0.0	0.0	0.0	0.0
	1.00													
80	1.00	0.0	0.0	0.0	0.0	0.30	0.0	0.0	1.00	0.0	0.0	0.0	0.0	0.0
	1.00													
81	1.00	0.0	0.0	0.0	0.0	0.0	-0.30	0.0	-1.00	0.0	0.0	0.0	0.0	0.0
	1.00													
82	1.00	0.0	0.0	0.0	0.0	0.0	-0.30	0.0	1.00	0.0	0.0	0.0	0.0	0.0
	1.00													
83	1.00	0.0	0.0	0.0	0.0	0.0	0.30	0.0	-1.00	0.0	0.0	0.0	0.0	0.0
	1.00													
84	1.00	0.0	0.0	0.0	0.0	0.0	0.30	0.0	1.00	0.0	0.0	0.0	0.0	0.0
	1.00													
85	1.00	0.0	0.0	0.0	0.0	0.0	0.0	0.0	0.0	0.0	0.0	0.0	0.0	0.0
	1.00													
86	1.00	0.0	0.0	0.0	0.0	0.0	0.0	0.0	0.0	0.0	0.60	0.60	0.60	0.60
	1.00													
87	1.00	0.0	0.0	0.0	0.0	0.0	0.0	0.0	0.0	1.00	0.60	0.60	0.60	0.60
	1.00													
88	1.00	0.0	0.0	0.0	0.0	0.0	0.0	0.0	0.0	0.0	1.00	0.60	0.60	0.60
	1.00													
89	1.00	0.0	0.0	0.0	0.0	0.0	0.0	0.0	0.0	1.00	1.00	0.60	0.60	0.60
	1.00													
90	1.00	0.0	0.0	0.0	0.0	0.0	0.0	0.0	0.0	0.0	0.60	1.00	0.60	0.60
	1.00													
91	1.00	0.0	0.0	0.0	0.0	0.0	0.0	0.0	0.0	1.00	0.60	1.00	0.60	0.60
	1.00													
92	1.00	0.0	0.0	0.0	0.0	0.0	0.0	0.0	0.0	0.0	0.60	0.60	1.00	0.60
	1.00													
93	1.00	0.0	0.0	0.0	0.0	0.0	0.0	0.0	0.0	1.00	0.60	0.60	1.00	0.60
	1.00													
94	1.00	0.0	0.0	0.0	0.0	0.0	0.0	0.0	0.0	0.0	0.60	0.60	0.60	1.00
	1.00													
95	1.00	0.0	0.0	0.0	0.0	0.0	0.0	0.0	0.0	1.00	0.60	0.60	0.60	1.00
	1.00													
96	1.00	0.0	0.0	0.0	0.0	0.0	0.0	0.0	0.0	0.0	0.0	0.0	0.0	0.0
	1.00													
97	1.00	0.0	0.0	0.0	0.0	0.0	0.0	0.0	0.0	0.90	0.0	0.0	0.0	0.0
	1.00													
98	1.00	0.0	0.0	0.0	0.0	0.0	0.0	0.0	0.0	0.0	0.20	0.0	0.0	0.0
	1.00													
99	1.00	0.0	0.0	0.0	0.0	0.0	0.0	0.0	0.0	0.0	0.0	0.20	0.0	0.0

Cmb	CDC 1/15...	CDC 2/16...	CDC 3/17...	CDC 4/18...	CDC 5/19...	CDC 6/20...	CDC 7/21...	CDC 8/22...	CDC 9/23...	CDC 10/24...	CDC 11/25...	CDC 12/26...	CDC 13/27...	CDC 14/28...
	1.00													
100	1.00	0.0	0.0	0.0	0.0	0.0	0.0	0.0	0.0	0.0	0.0	0.0	0.20	0.0
	1.00													
101	1.00	0.0	0.0	0.0	0.0	0.0	0.0	0.0	0.0	0.0	0.0	0.0	0.0	0.20
	1.00													
102	1.00	0.0	0.0	0.0	0.0	0.0	0.0	0.0	0.0	0.0	0.0	0.0	0.0	0.0
	1.00													

5 ANALISI IN CAMPO SISMICO

Gli effetti sismici sono stati valutati convenzionalmente mediante un'analisi dinamica lineare della struttura considerata in campo elastico lineare.

Il manufatto è considerato come un sistema non dissipativo sia agli Stati Limite Ultimi che agli Stati Limite di Esercizio, per cui gli effetti delle azioni sismiche sono calcolati riferendosi allo spettro di progetto ottenuto assumendo un fattore di struttura q unitario.

Lo spettro di risposta fornisce la massima risposta, in termini di accelerazione, per l'oscillatore semplice caratterizzato dal valore del periodo naturale e dello smorzamento, In questo modo la risposta della struttura è fornita dalla risposta dell'oscillatore semplice corrispondente alla forma modale principale, In seguito viene esplicitata l'applicabilità del metodo statico.

L'azione sismica sulle costruzioni è valutata a partire dalla "pericolosità sismica di base", in condizioni ideali di sito di riferimento rigido con superficie topografica orizzontale.

Allo stato attuale, la pericolosità sismica su reticolo di riferimento nell'intervallo di riferimento è fornita dai dati pubblicati sul sito http://esse1.mi.ingv.it/.

Per punti non coincidenti con il reticolo di riferimento e periodi di ritorno non contemplati direttamente si opera come indicato nell' allegato alle NTC (rispettivamente media pesata e interpolazione).

L' azione sismica viene definita in relazione ad un periodo di riferimento Vr che si ricava, per ciascun tipo di costruzione, moltiplicandone la vita nominale per il coefficiente d'uso (vedi tabella Parametri della struttura). Fissato il periodo di riferimento Vr e la probabilità di superamento Pver associata a ciascuno degli stati limite considerati, si ottiene il periodo di ritorno Tr e i relativi parametri di pericolosità sismica (vedi tabella successiva):

ag: accelerazione orizzontale massima del terreno;
Fo: valore massimo del fattore di amplificazione dello spettro in accelerazione orizzontale;
T*c: periodo di inizio del tratto a velocità costante dello spettro in accelerazione orizzontale;

Parametri della struttura					
Classe d'uso	Vita Vn [anni]	Coeff. Uso	Periodo Vr [anni]	Tipo di suolo	Categoria topografica
II	50.0	1.0	50.0	C	T1

Individuati su reticolo di riferimento i parametri di pericolosità sismica si valutano i parametri spettrali riportati in tabella:

S è il coefficiente che tiene conto della categoria di sottosuolo e delle condizioni topografiche mediante la relazione seguente S = Ss*St (3.2.3)

Fo è il fattore che quantifica l'amplificazione spettrale massima, su sito di riferimento rigido orizzontale

Fv è il fattore che quantifica l'amplificazione spettrale massima verticale, in termini di accelerazione orizzontale massima del terreno ag su sito di riferimento rigido orizzontale

Tb è il periodo corrispondente all'inizio del tratto dello spettro ad accelerazione costante.

Tc è il periodo corrispondente all'inizio del tratto dello spettro a velocità costante.

Td è il periodo corrispondente all'inizio del tratto dello spettro a spostamento costante.

Lo spettro di risposta elastico in accelerazione della componente orizzontale del moto sismico, Se, è definito dalle seguenti espressioni:

$$0 \le T < T_B \qquad S_e(T) = a_g \cdot S \cdot \eta \cdot F_o \cdot \left[\frac{T}{T_B} + \frac{1}{\eta \cdot F_o}\left(1 - \frac{T}{T_B}\right)\right]$$

$$T_B \le T < T_C \qquad S_e(T) = a_g \cdot S \cdot \eta \cdot F_o$$

$$T_C \le T < T_D \qquad S_e(T) = a_g \cdot S \cdot \eta \cdot F_o \cdot \left(\frac{T_C}{T}\right)$$

$$T_D \le T \qquad S_e(T) = a_g \cdot S \cdot \eta \cdot F_o \cdot \left(\frac{T_C \cdot T_D}{T^2}\right)$$

Dove per sottosuolo di categoria **A** i coefficienti S_S e C_C valgono 1; mentre per le categorie di sottosuolo B, C, D, E i coefficienti S_S e C_C vengono calcolati mediante le espressioni riportane nella seguente Tabella

Categoria sottosuolo	S_S	C_C
A	1,00	1,00
B	$1{,}00 \le 1{,}40 - 0{,}40 \cdot F_o \cdot \frac{a_g}{g} \le 1{,}20$	$1{,}10 \cdot (T_C^*)^{-0{,}20}$
C	$1{,}00 \le 1{,}70 - 0{,}60 \cdot F_o \cdot \frac{a_g}{g} \le 1{,}50$	$1{,}05 \cdot (T_C^*)^{-0{,}33}$
D	$0{,}90 \le 2{,}40 - 1{,}50 \cdot F_o \cdot \frac{a_g}{g} \le 1{,}80$	$1{,}25 \cdot (T_C^*)^{-0{,}50}$
E	$1{,}00 \le 2{,}00 - 1{,}10 \cdot F_o \cdot \frac{a_g}{g} \le 1{,}60$	$1{,}15 \cdot (T_C^*)^{-0{,}40}$

Per tenere conto delle condizioni topografiche e in assenza di specifiche analisi di risposta sismica locale, si utilizzano i valori del coefficiente topografico S_T riportati nella seguente Tabella

Categoria topografica	Ubicazione dell'opera o dell'intervento	S_T
T1	-	1,0
T2	In corrispondenza della sommità del pendio	1,2
T3	In corrispondenza della cresta di un rilievo con pendenza media minore o uguale a 30°	1,2
T4	In corrispondenza della cresta di un rilievo con pendenza media maggiore di 30°	1,4

Lo spettro di risposta elastico in accelerazione della componente verticale del moto sismico, Sve, è definito dalle espressioni:

$$0 \le T < T_B \qquad S_{ve}(T) = a_g \cdot S \cdot \eta \cdot F_v \cdot \left[\frac{T}{T_B} + \frac{1}{\eta \cdot F_o}\left(1 - \frac{T}{T_B}\right)\right]$$

$$T_B \le T < T_C \qquad S_{ve}(T) = a_g \cdot S \cdot \eta \cdot F_v$$

$$T_C \le T < T_D \qquad S_{ve}(T) = a_g \cdot S \cdot \eta \cdot F_v \cdot \left(\frac{T_C}{T}\right)$$

$$T_D \le T \qquad S_{ve}(T) = a_g \cdot S \cdot \eta \cdot F_v \cdot \left(\frac{T_C \cdot T_D}{T^2}\right)$$

I valori di S_S, T_B, T_C e T_D, sono riportati nella seguente Tabella

Categoria di sottosuolo	S_S	T_B	T_C	T_D
A, B, C, D, E	1,0	0,05 s	0,15 s	1,0 s

Id nodo	Longitudine	Latitudine	Distanza
			Km
Loc.	12.244	45.669	
11859	12.205	45.628	5.457
11860	12.276	45.629	5.079
11638	12.275	45.679	2.644
11637	12.204	45.678	3.254

SL	Pver	Tr	ag	Fo	T*c
		Anni	g		sec
SLO	81.0	30.1	0.038	2.563	0.236
SLD	63.0	50.3	0.051	2.483	0.260
SLV	10.0	474.6	0.137	2.473	0.339
SLC	5.0	974.8	0.183	2.511	0.349

SL	ag	S	Fo	Fv	Tb	Tc	Td
	g				sec	sec	sec
SLO	0.038	1.500	2.563	0.672	0.133	0.399	1.751
SLD	0.051	1.500	2.483	0.755	0.142	0.426	1.803
SLV	0.137	1.496	2.473	1.237	0.170	0.509	2.149
SLC	0.183	1.425	2.511	1.449	0.173	0.519	2.330

5.1 RISULTATI ANALISI SISMICHE

LEGENDA TABELLA ANALISI SISMICHE

Il programma consente l'analisi di diverse configurazioni sismiche.

Sono previsti, infatti, i seguenti casi di carico:
9. Esk caso di carico sismico con analisi statica equivalente
10. Edkcaso di carico sismico con analisi dinamica

Ciascun caso di carico è caratterizzato da un angolo di ingresso e da una configurazione di masse determinante la forza sismica complessiva (si rimanda al capitolo relativo ai casi di carico per chiarimenti inerenti questo aspetto).

Nella colonna Note, in funzione della norma in uso sono riportati i parametri fondamentali che caratterizzano l' azione sismica: in particolare possono essere presenti i seguenti valori:

Angolo di ingresso	Angolo di ingresso dell'azione sismica orizzontale
Fattore di importanza	Fattore di importanza dell'edificio, in base alla categoria di appartenenza
Zona sismica	Zona sismica
Accelerazione ag	Accelerazione orizzontale massima sul suolo
Categoria suolo	Categoria di profilo stratigrafico del suolo di fondazione

Fattore q	Fattore di struttura/di comportamento. Dipendente dalla tipologia strutturale
Amplificazione ND	Coefficiente di amplificazione q/qND delle azioni sismiche (solo per elementi progettati in campo non dissipativo)
Fattore di sito S	Fattore dipendente dalla stratigrafia e dal profilo topografico
Classe di duttilità CD	Classe di duttilità della struttura – "A" duttilità alta, "B" duttilità bassa
Fattore riduz. SLD	Fattore di riduzione dello spettro elastico per lo stato limite di danno
Periodo proprio T1	Periodo proprio di vibrazione della struttura
Coefficiente Lambda	Coefficiente dipendente dal periodo proprio T1 e dal numero di piani della struttura
Ordinata spettro Sd(T1)	Valore delle ordinate dello spettro di progetto per lo stato limite ultimo, componente orizzontale (verticale Svd)
Ordinata spettro Se(T1)	Valore delle ordinate dello spettro elastico ridotta del fattore SLD per lo stato limite di danno, componente orizzontale (verticale Sve)
Ordinata spettro S (Tb-Tc)	Valore dell'ordinata dello spettro in uso nel tratto costante
numero di modi considerati	Numero di modi di vibrare della struttura considerati nell'analisi dinamica

Nel caso di elementi progettati in campo non dissipativo vengono adottate le sollecitazioni calcolate con un fattore qND ricavato come da 7.3.2 in funzione del fattore di comportamento q utilizzato per la struttura: 1<qND=2/3*q < 1.5
Il coefficiente di amplificazione delle azioni sismiche rispetto alle azioni calcolate con il fattore di comportamento globale viene indicato nelle relative tabelle.

Per ciascun caso di carico sismico viene riportato l'insieme di dati sotto riportati (le masse sono espresse in unità di forza):

a) analisi sismica statica equivalente:
   - quota, posizione del centro di applicazione e azione orizzontale risultante, posizione del baricentro delle rigidezze, rapporto r/Ls (per strutture a nucleo), indici di regolarità e/r secondo EC8 4.2.3.2
   - azione sismica complessiva

b) analisi sismica dinamica con spettro di risposta:
   - quota, posizione del centro di massa e massa risultante, posizione del baricentro delle rigidezze, rapporto r/Ls (per strutture a nucleo) **,** indici di regolarità e/r secondo EC8 4.2.3.2
   - frequenza, periodo, accelerazione spettrale, massa eccitata nelle tre direzioni globali per tutti i modi
   - massa complessiva ed aliquota di massa complessiva eccitata.

Per ciascuna combinazione sismica definita SLD o SLO viene riportato il livello di deformazione etaT (dr) degli elementi strutturali verticali. Per semplicità di consultazione il livello è espresso anche in unità 1000*etaT/h da confrontare direttamente con i valori forniti nella norma (es. 5 per edifici con tamponamenti collegati rigidamente alla struttura, 10.0 per edifici con tamponamenti collegati elasticamente, 3 per edifici in muratura ordinaria, 4 per edifici in muratura armata).

Qualora si applichi il D.M. 96 (vedi NOTA sul capitolo "normativa di riferimento") l'analisi sismica dinamica può essere comprensiva di sollecitazione verticale contemporanea a quella orizzontale, nel qual caso è effettuata una sovrapposizione degli effetti in ragione della radice dei quadrati degli effetti stessi. Per ciascuna combinazione sismica - analisi effettuate con il D.M. 96 (vedi NOTA sul capitolo "normativa di riferimento") -

viene riportato il livello di deformazione etaT, etaP e etaD degli elementi strutturali verticali. Per semplicità di consultazione il livello è espresso in unità 1000*etaT/h da confrontare direttamente con il valore 2 o 4 per la verifica.

Per gli edifici sismicamente isolati si riportano di seguito le verifiche condotte sui dispositivi di isolamento. Le verifiche sono effettuate secondo la circolare n.7/2019 del C.S.LL.PP nelle combinazioni in SLC come previsto dal DM 17-01-2018. Per ogni combinazione è riportato il codice di verifica ed i valori utilizzati per la verifica: spostamento dE, area ridotta e dimensione A2, azione verticale, deformazioni di taglio dell'elastomero e tensioni nell'acciaio.
Qualora si applichi l'Ordinanza 3274 e s.m.i. le verifiche sono eseguite in accordo con l'allegato 10.A.
In particolare la tabella, per ogni combinazione di calcolo, riporta:

Nodo	Nodo di appoggio dell' isolatore
Cmb	Combinazione oggetto della verifica
Verif.	Codice di verifica ok – verifica positiva , NV – verifica negativa, ND – verifica non completata
dE	Spostamento relativo tra le due facce (amplificato del 20% per Ordinanza 3274 e smi) combinato con la regola del 30%
Ang fi	Angolo utilizzato per il calcolo dell' area ridotta Ar (per dispositivi circolari)
V	Azione verticale agente
Ar	Area ridotta efficace
Dim A2	Dimensione utile per il calcolo della deformazione per rotazione
Sig s	Tensione nell' inserto in acciaio
Gam c(a,s,t)	Deformazioni di taglio dell' elestomero
Vcr	Carico critico per instabilità

Affinché la verifica sia positiva deve essere:

1) V > 0
2) Sig s < fyk
3) Gam t < 5
4) Gam s < Gam * (caratteristica dell' elastomero)
5) Gam s < 2
6) V < 0.5 Vcr

CDC	Tipo	Sigla Id	Note
2	Edk	CDC=Ed (dinamico SLU) alfa=0.0 (ecc. +)	
			categoria suolo: C
			fattore di sito S = 1.496
			ordinata spettro (tratto Tb-Tc) = 0.508 g
			angolo di ingresso:0.0
			eccentricità aggiuntiva: positiva
			periodo proprio T1: 0.013 sec.
			fattore q: 1.000
			amplificazione ND (non dissipativi): 1.000
			fattore per spost. mu d: 1.000
			classe di duttilità CD: ND
			numero di modi considerati: 9
			combinaz. modale: CQC

Quota	M Sismica x g	Pos. GX	Pos. GY	E agg. X-X	E agg. Y-Y	Pos. KX	Pos. KY	(r/Ls)^2	rapp. ex/rx	rapp. ey/ry
cm	daN	cm	cm	cm	cm	cm	cm			
105.00	2.400e+04	165.00	600.00	0.0	-60.00	165.00	600.00	1.093	0.0	0.0

Quota	M Sismica x g	Pos. GX	Pos. GY	E agg. X-X	E agg. Y-Y	Pos. KX	Pos. KY	(r/Ls)^2	rapp. ex/rx	rapp. ey/ry
Risulta	2.400e+04									

Modo	Frequenza	Periodo	Acc. Spettrale	M efficace X x g	%	M efficace Y x g	%	M efficace Z x g	%	Energia	Energia x v
	Hz	sec	g	daN		daN		daN			
1	12.024	0.083	0.353	0.0	0.0	0.0	0.0	1.916e+04	79.8	0.0	0.0
2	23.454	0.043	0.281	55.04	0.2	0.0	0.0	0.0	0.0	0.0	0.0
3	40.518	0.025	0.249	0.0	0.0	156.12	0.7	0.0	0.0	0.0	0.0
4	58.352	0.017	0.236	11.89	4.95e-02	0.0	0.0	0.0	0.0	0.0	0.0
5	62.164	0.016	0.234	0.0	0.0	0.0	0.0	0.02	9.54e-05	0.0	0.0
6	75.848	0.013	0.229	1.773e+04	73.9	0.0	0.0	0.0	0.0	0.0	0.0
7	90.871	0.011	0.225	2.31e-05	0.0	7.25e-05	0.0	2213.27	9.2	0.0	0.0
8	102.167	0.010	0.223	3.01e-04	1.26e-06	0.17	7.22e-04	3.19e-05	0.0	0.0	0.0
9	108.998	0.009	0.222	1089.52	4.5	5.12e-05	0.0	2.17e-05	0.0	0.0	0.0
Risulta				1.889e+04		156.29		2.137e+04			
In percentuale				78.69		0.65		89.06			

CDC	Tipo	Sigla Id	Note
3	Edk	CDC=Ed (dinamico SLU) alfa=0.0 (ecc. -)	
			categoria suolo: C
			fattore di sito S = 1.496
			ordinata spettro (tratto Tb-Tc) = 0.508 g
			angolo di ingresso:0.0
			eccentricità aggiuntiva: negativa
			periodo proprio T1: 0.013 sec.
			fattore q: 1.000
			amplificazione ND (non dissipativi): 1.000
			fattore per spost. mu d: 1.000
			classe di duttilità CD: ND
			numero di modi considerati: 9
			combinaz. modale: CQC

Quota	M Sismica x g	Pos. GX	Pos. GY	E agg. X-X	E agg. Y-Y	Pos. KX	Pos. KY	(r/Ls)^2	rapp. ex/rx	rapp. ey/ry
cm	daN	cm	cm	cm	cm	cm	cm			
105.00	2.400e+04	165.00	600.00	0.0	60.00	165.00	600.00	1.093	0.0	0.0
Risulta	2.400e+04									

Modo	Frequenza	Periodo	Acc. Spettrale	M efficace X x g	%	M efficace Y x g	%	M efficace Z x g	%	Energia	Energia x v
	Hz	sec	g	daN		daN		daN			
1	12.024	0.083	0.353	0.0	0.0	0.0	0.0	1.916e+04	79.8	0.0	0.0
2	23.454	0.043	0.281	55.04	0.2	0.0	0.0	0.0	0.0	0.0	0.0
3	40.518	0.025	0.249	0.0	0.0	156.12	0.7	0.0	0.0	0.0	0.0
4	58.352	0.017	0.236	11.88	4.95e-02	0.0	0.0	0.0	0.0	0.0	0.0
5	62.164	0.016	0.234	0.0	0.0	0.0	0.0	0.02	9.53e-05	0.0	0.0
6	75.848	0.013	0.229	1.773e+04	73.9	0.0	0.0	0.0	0.0	0.0	0.0
7	90.871	0.011	0.225	0.0	0.0	6.04e-06	0.0	2213.44	9.2	0.0	0.0
8	102.167	0.010	0.223	1.48e-05	0.0	0.18	7.70e-04	2.23e-05	0.0	0.0	0.0
9	108.998	0.009	0.222	1088.42	4.5	7.32e-04	3.05e-06	1.63e-04	0.0	0.0	0.0
Risulta				1.888e+04		156.30		2.137e+04			
In percentuale				78.68		0.65		89.06			

CDC	Tipo	Sigla Id	Note
4	Edk	CDC=Ed (dinamico SLU) alfa=90.00 (ecc. +)	
			categoria suolo: C

CDC	Tipo	Sigla Id	Note
			fattore di sito S = 1.496
			ordinata spettro (tratto Tb-Tc) = 0.508 g
			angolo di ingresso:90.00
			eccentricità aggiuntiva: positiva
			periodo proprio T1: 0.300 sec.
			fattore q: 1.000
			amplificazione ND (non dissipativi): 1.000
			fattore per spost. mu d: 1.000
			classe di duttilità CD: ND
			numero di modi considerati: 9
			combinaz. modale: CQC

Quota	M Sismica x g	Pos. GX	Pos. GY	E agg. X-X	E agg. Y-Y	Pos. KX	Pos. KY	(r/Ls)^2	rapp. ex/rx	rapp. ey/ry
cm	daN	cm	cm	cm	cm	cm	cm			
105.00	2.400e+04	165.00	600.00	20.00	0.0	165.00	600.00	1.093	0.0	0.0
Risulta	2.400e+04									

Modo	Frequenza	Periodo	Acc. Spettrale	M efficace X x g	%	M efficace Y x g	%	M efficace Z x g	%	Energia	Energia x v
	Hz	sec	g	daN		daN		daN			
1	12.024	0.083	0.353	1.63e-06	0.0	0.0	0.0	1.916e+04	79.8	0.0	0.0
2	23.454	0.043	0.281	55.00	0.2	0.0	0.0	1.77e-04	0.0	0.0	0.0
3	40.518	0.025	0.249	0.0	0.0	156.28	0.7	0.0	0.0	0.0	0.0
4	58.356	0.017	0.236	0.0	0.0	0.84	3.52e-03	0.0	0.0	0.0	0.0
5	62.164	0.016	0.234	2.71e-04	1.13e-06	0.0	0.0	0.02	9.54e-05	0.0	0.0
6	75.938	0.013	0.229	1.769e+04	73.7	0.0	0.0	0.06	2.70e-04	0.0	0.0
7	90.871	0.011	0.225	0.95	3.94e-03	3.06e-05	0.0	2213.20	9.2	0.0	0.0
8	102.167	0.010	0.223	1.42e-04	0.0	0.17	6.95e-04	3.44e-05	0.0	0.0	0.0
9	109.037	0.009	0.222	1096.38	4.6	2.83e-04	1.18e-06	0.08	3.27e-04	0.0	0.0
Risulta				1.884e+04		157.29		2.137e+04			
In percentuale				78.51		0.66		89.06			

CDC	Tipo	Sigla Id	Note
5	Edk	CDC=Ed (dinamico SLU) alfa=90.00 (ecc. -)	
			categoria suolo: C
			fattore di sito S = 1.496
			ordinata spettro (tratto Tb-Tc) = 0.508 g
			angolo di ingresso:90.00
			eccentricità aggiuntiva: negativa
			periodo proprio T1: 0.300 sec.
			fattore q: 1.000
			amplificazione ND (non dissipativi): 1.000
			fattore per spost. mu d: 1.000
			classe di duttilità CD: ND
			numero di modi considerati: 9
			combinaz. modale: CQC

Quota	M Sismica x g	Pos. GX	Pos. GY	E agg. X-X	E agg. Y-Y	Pos. KX	Pos. KY	(r/Ls)^2	rapp. ex/rx	rapp. ey/ry
cm	daN	cm	cm	cm	cm	cm	cm			
105.00	2.400e+04	165.00	600.00	-20.00	0.0	165.00	600.00	1.093	0.0	0.0
Risulta	2.400e+04									

Modo	Frequenza	Periodo	Acc. Spettrale	M efficace X x g	%	M efficace Y x g	%	M efficace Z x g	%	Energia	Energia x v
	Hz	sec	g	daN		daN		daN			

Modo	Frequenza	Periodo	Acc. Spettrale	M efficace X x g	%	M efficace Y x g	%	M efficace Z x g	%	Energia	Energia x v
1	12.024	0.083	0.353	1.63e-06	0.0	0.0	0.0	1.916e+04	79.8	0.0	0.0
2	23.454	0.043	0.281	55.00	0.2	0.0	0.0	1.77e-04	0.0	0.0	0.0
3	40.518	0.025	0.249	0.0	0.0	156.28	0.7	0.0	0.0	0.0	0.0
4	58.356	0.017	0.236	0.0	0.0	0.85	3.52e-03	0.0	0.0	0.0	0.0
5	62.164	0.016	0.234	2.71e-04	1.13e-06	0.0	0.0	0.02	9.54e-05	0.0	0.0
6	75.938	0.013	0.229	1.769e+04	73.7	0.0	0.0	0.06	2.71e-04	0.0	0.0
7	90.871	0.011	0.225	0.96	3.98e-03	2.03e-05	0.0	2213.23	9.2	0.0	0.0
8	102.167	0.010	0.223	9.23e-05	0.0	0.17	7.19e-04	3.88e-05	0.0	0.0	0.0
9	109.037	0.009	0.222	1096.35	4.6	2.69e-04	1.12e-06	0.08	3.46e-04	0.0	0.0
Risulta				1.884e+04		157.30		2.137e+04			
In percentuale				78.51		0.66		89.06			

CDC	Tipo	Sigla Id	Note
6	Edk	CDC=Ed (dinamico SLD) alfa=0.0 (ecc. +)	
			categoria suolo: C
			fattore di sito S = 1.500
			ordinata spettro (tratto Tb-Tc) = 0.189 g
			angolo di ingresso:0.0
			eccentricità aggiuntiva: positiva
			periodo proprio T1: 0.013 sec.
			numero di modi considerati: 9
			combinaz. modale: CQC

Quota	M Sismica x g	Pos. GX	Pos. GY	E agg. X-X	E agg. Y-Y	Pos. KX	Pos. KY	(r/Ls)^2	rapp. ex/rx	rapp. ey/ry
cm	daN	cm	cm	cm	cm	cm	cm			
105.00	2.400e+04	165.00	600.00	0.0	-60.00	165.00	600.00	1.093	0.0	0.0
Risulta	2.400e+04									

Modo	Frequenza	Periodo	Acc. Spettrale	M efficace X x g	%	M efficace Y x g	%	M efficace Z x g	%	Energia	Energia x v
	Hz	sec	g	daN		daN		daN			
1	12.024	0.083	0.142	0.0	0.0	0.0	0.0	1.916e+04	79.8	0.0	0.0
2	23.454	0.043	0.110	55.04	0.2	0.0	0.0	0.0	0.0	0.0	0.0
3	40.518	0.025	0.096	0.0	0.0	156.12	0.7	0.0	0.0	0.0	0.0
4	58.352	0.017	0.090	11.89	4.95e-02	0.0	0.0	0.0	0.0	0.0	0.0
5	62.164	0.016	0.089	0.0	0.0	0.0	0.0	0.02	9.54e-05	0.0	0.0
6	75.848	0.013	0.087	1.773e+04	73.9	0.0	0.0	0.0	0.0	0.0	0.0
7	90.871	0.011	0.085	2.31e-05	0.0	7.25e-05	0.0	2213.27	9.2	0.0	0.0
8	102.167	0.010	0.084	3.01e-04	1.26e-06	0.17	7.22e-04	3.19e-05	0.0	0.0	0.0
9	108.998	0.009	0.083	1089.52	4.5	5.12e-05	0.0	2.17e-05	0.0	0.0	0.0
Risulta				1.889e+04		156.29		2.137e+04			
In percentuale				78.69		0.65		89.06			

CDC	Tipo	Sigla Id	Note
7	Edk	CDC=Ed (dinamico SLD) alfa=0.0 (ecc. -)	
			categoria suolo: C
			fattore di sito S = 1.500
			ordinata spettro (tratto Tb-Tc) = 0.189 g
			angolo di ingresso:0.0
			eccentricità aggiuntiva: negativa
			periodo proprio T1: 0.013 sec.
			numero di modi considerati: 9
			combinaz. modale: CQC

Quota	M Sismica x g	Pos. GX	Pos. GY	E agg. X-X	E agg. Y-Y	Pos. KX	Pos. KY	(r/Ls)^2	rapp. ex/rx	rapp. ey/ry
cm	daN	cm	cm	cm	cm	cm	cm			
105.00	2.400e+04	165.00	600.00	0.0	60.00	165.00	600.00	1.093	0.0	0.0
Risulta	2.400e+04									

Modo	Frequenza	Periodo	Acc. Spettrale	M efficace X x g	%	M efficace Y x g	%	M efficace Z x g	%	Energia	Energia x v
	Hz	sec	g	daN		daN		daN			
1	12.024	0.083	0.142	0.0	0.0	0.0	0.0	1.916e+04	79.8	0.0	0.0
2	23.454	0.043	0.110	55.04	0.2	0.0	0.0	0.0	0.0	0.0	0.0
3	40.518	0.025	0.096	0.0	0.0	156.12	0.7	0.0	0.0	0.0	0.0
4	58.352	0.017	0.090	11.88	4.95e-02	0.0	0.0	0.0	0.0	0.0	0.0
5	62.164	0.016	0.089	0.0	0.0	0.0	0.0	0.02	9.53e-05	0.0	0.0
6	75.848	0.013	0.087	1.773e+04	73.9	0.0	0.0	0.0	0.0	0.0	0.0
7	90.871	0.011	0.085	0.0	0.0	6.04e-06	0.0	2213.44	9.2	0.0	0.0
8	102.167	0.010	0.084	1.48e-05	0.0	0.18	7.70e-04	2.23e-05	0.0	0.0	0.0
9	108.998	0.009	0.083	1088.42	4.5	7.32e-04	3.05e-06	1.63e-04	0.0	0.0	0.0
Risulta				1.888e+04		156.30		2.137e+04			
In percentuale				78.68		0.65		89.06			

CDC	Tipo	Sigla Id	Note
8	Edk	CDC=Ed (dinamico SLD) alfa=90.00 (ecc. +)	
			categoria suolo: C
			fattore di sito S = 1.500
			ordinata spettro (tratto Tb-Tc) = 0.189 g
			angolo di ingresso:90.00
			eccentricità aggiuntiva: positiva
			periodo proprio T1: 0.300 sec.
			numero di modi considerati: 9
			combinaz. modale: CQC

Quota	M Sismica x g	Pos. GX	Pos. GY	E agg. X-X	E agg. Y-Y	Pos. KX	Pos. KY	(r/Ls)^2	rapp. ex/rx	rapp. ey/ry
cm	daN	cm	cm	cm	cm	cm	cm			
105.00	2.400e+04	165.00	600.00	20.00	0.0	165.00	600.00	1.093	0.0	0.0
Risulta	2.400e+04									

Modo	Frequenza	Periodo	Acc. Spettrale	M efficace X x g	%	M efficace Y x g	%	M efficace Z x g	%	Energia	Energia x v
	Hz	sec	g	daN		daN		daN			
1	12.024	0.083	0.142	1.63e-06	0.0	0.0	0.0	1.916e+04	79.8	0.0	0.0
2	23.454	0.043	0.110	55.00	0.2	0.0	0.0	1.77e-04	0.0	0.0	0.0
3	40.518	0.025	0.096	0.0	0.0	156.28	0.7	0.0	0.0	0.0	0.0
4	58.356	0.017	0.090	0.0	0.0	0.84	3.52e-03	0.0	0.0	0.0	0.0
5	62.164	0.016	0.089	2.71e-04	1.13e-06	0.0	0.0	0.02	9.54e-05	0.0	0.0
6	75.938	0.013	0.087	1.769e+04	73.7	0.0	0.0	0.06	2.70e-04	0.0	0.0
7	90.871	0.011	0.085	0.95	3.94e-03	3.06e-05	0.0	2213.20	9.2	0.0	0.0
8	102.167	0.010	0.084	1.42e-04	0.0	0.17	6.95e-04	3.44e-05	0.0	0.0	0.0
9	109.037	0.009	0.083	1096.38	4.6	2.83e-04	1.18e-06	0.08	3.27e-04	0.0	0.0
Risulta				1.884e+04		157.29		2.137e+04			
In percentuale				78.51		0.66		89.06			

CDC	Tipo	Sigla Id	Note
9	Edk	CDC=Ed (dinamico SLD) alfa=90.00 (ecc. -)	
			categoria suolo: C
			fattore di sito S = 1.500
			ordinata spettro (tratto Tb-Tc) = 0.189 g

CDC	Tipo	Sigla Id	Note
			angolo di ingresso:90.00
			eccentricità aggiuntiva: negativa
			periodo proprio T1: 0.300 sec.
			numero di modi considerati: 9
			combinaz. modale: CQC

Quota	M Sismica x g	Pos. GX	Pos. GY	E agg. X-X	E agg. Y-Y	Pos. KX	Pos. KY	(r/Ls)^2	rapp. ex/rx	rapp. ey/ry
cm	daN	cm	cm	cm	cm	cm	cm			
105.00	2.400e+04	165.00	600.00	-20.00	0.0	165.00	600.00	1.093	0.0	0.0
Risulta	2.400e+04									

Modo	Frequenza	Periodo	Acc. Spettrale	M efficace X x g	%	M efficace Y x g	%	M efficace Z x g	%	Energia	Energia x v
	Hz	sec	g	daN		daN		daN			
1	12.024	0.083	0.142	1.63e-06	0.0	0.0	0.0	1.916e+04	79.8	0.0	0.0
2	23.454	0.043	0.110	55.00	0.2	0.0	0.0	1.77e-04	0.0	0.0	0.0
3	40.518	0.025	0.096	0.0	0.0	156.28	0.7	0.0	0.0	0.0	0.0
4	58.356	0.017	0.090	0.0	0.0	0.85	3.52e-03	0.0	0.0	0.0	0.0
5	62.164	0.016	0.089	2.71e-04	1.13e-06	0.0	0.0	0.02	9.54e-05	0.0	0.0
6	75.938	0.013	0.087	1.769e+04	73.7	0.0	0.0	0.06	2.71e-04	0.0	0.0
7	90.871	0.011	0.085	0.96	3.98e-03	2.03e-05	0.0	2213.23	9.2	0.0	0.0
8	102.167	0.010	0.084	9.23e-05	0.0	0.17	7.19e-04	3.88e-05	0.0	0.0	0.0
9	109.037	0.009	0.083	1096.35	4.6	2.69e-04	1.12e-06	0.08	3.46e-04	0.0	0.0
Risulta				1.884e+04		157.30		2.137e+04			
In percentuale				78.51		0.66		89.06			

6 MODELLAZIONE STRUTTURALE E RISULTATI ANALISI

La struttura e il suo comportamento sotto le azioni statiche e dinamiche è stato adeguatamente valutato, interpretato e trasferito in un modello tridimensionale; tale modello ha consentito di effettuare un'analisi particolarmente reale sia della distribuzione di massa che della effettiva rigidezza.

Il modello rappresenta la struttura costituita da: travi e pilastri con i solai ai vari piani schematizzati come impalcati rigidi.

L'analisi strutturale, nella fase statica, è stata condotta con il metodo degli spostamenti per la valutazione dello stato tensodeformativo indotto da carichi statici.

L'analisi strutturale, nella fase sismica, è stata condotta con il metodo dell'analisi modale e dello spettro di risposta in termini di accelerazione per la valutazione dello stato tensodeformativo indotto da carichi dinamici.

In entrambi i casi l'analisi strutturale è stata condotta con il metodo degli elementi finiti.

I pilastri e le travi sono stati schematizzati considerando elementi finiti che modellino sforzo normale, flessione deviata, taglio deviato e momento torcente.

Gli elementi finiti utilizzati per la modellazione dello schema statico della struttura sono i seguenti:

- Elemento tipo FRAME (pilastro e trave)
- Elemento tipo SHELL (elemento tipo lastra o piastra)

Le figure di seguito riportate illustrano il modello tridimensionale adottato ed i principali risultati delle analisi statiche e sismiche.

6.1 MODELLO STRUTTURALE

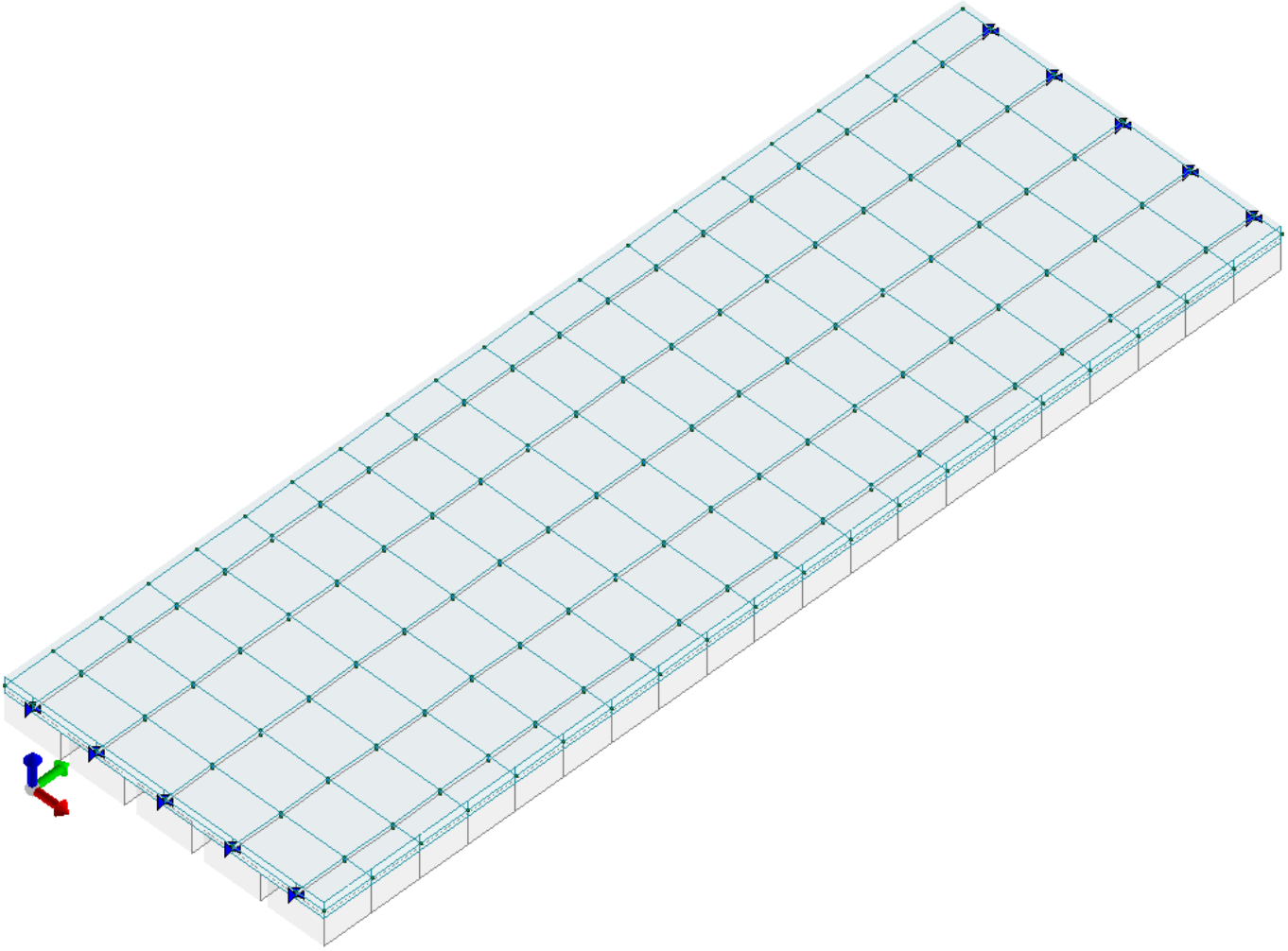

Figura 6-1: Modello strutturale 3D – elementi 2D e 3D

6.2 ANALISI DINAMICA

Si riportano di seguito i principali risultati dell'analisi dinamica modale.

In termini dinamici la struttura risulta correttamente modellata, verificando che i modi principali I° e II° modo sono traslazionali secondo direzione Y e X di cui di seguito figure:

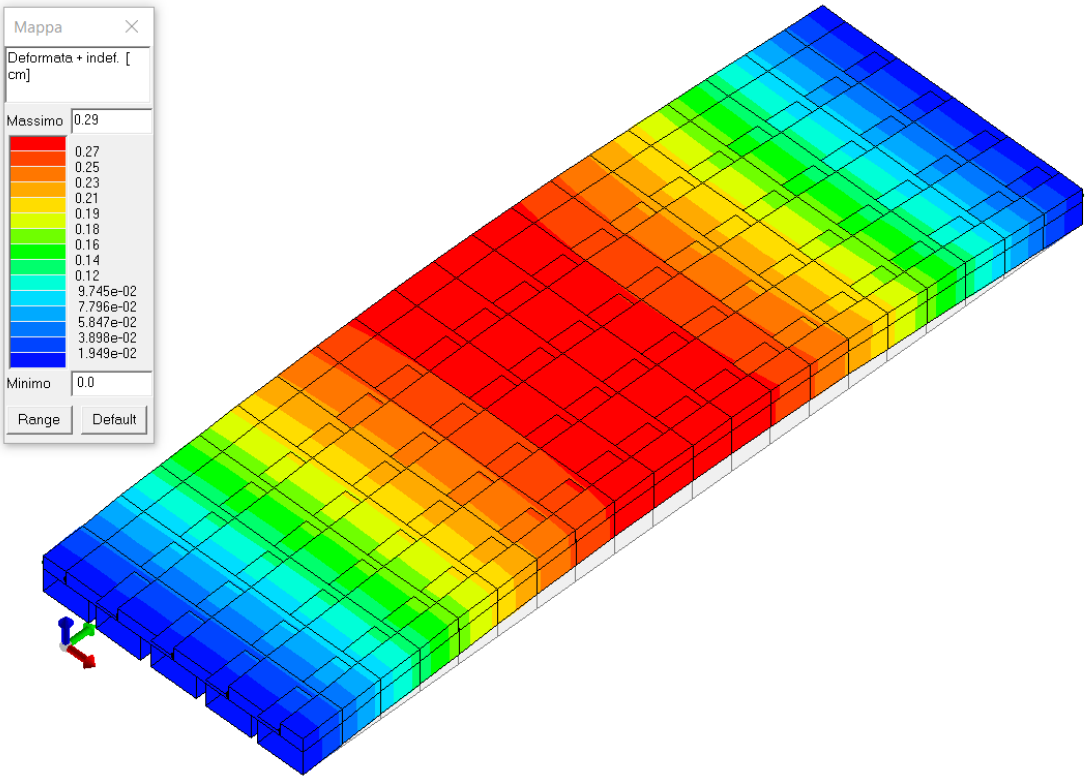

Figura 6-2: Analisi DINAMICA - MODO PRINCIPALE I°

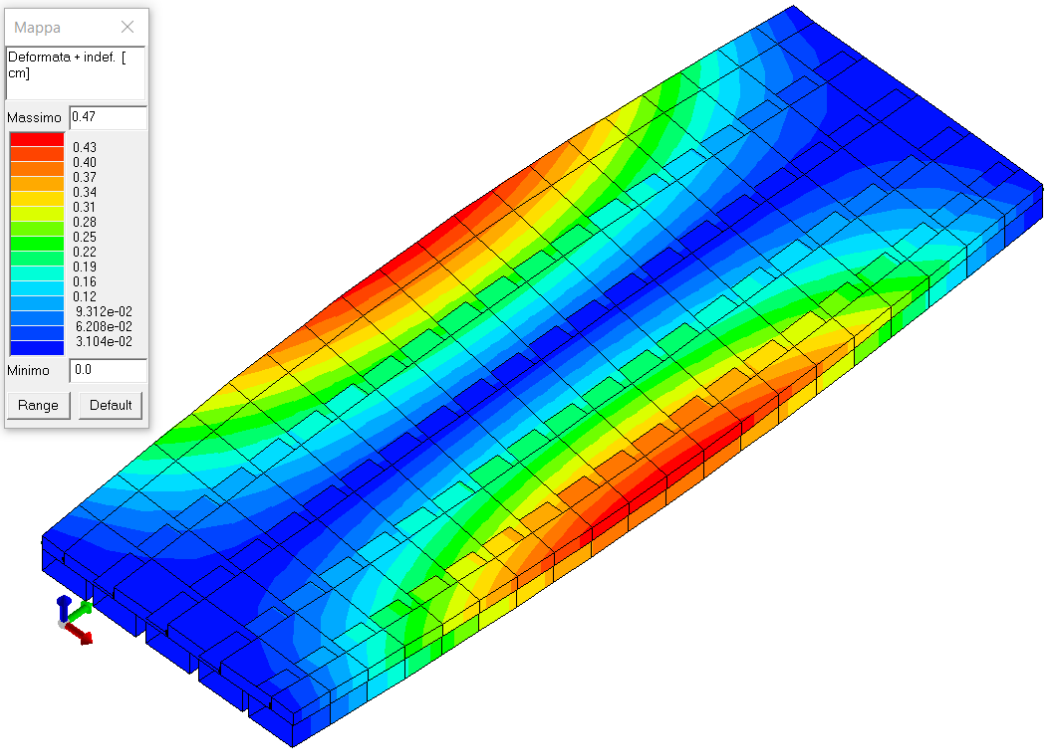

Figura 6-3: Analisi DINAMICA - MODO PRINCIPALE II°

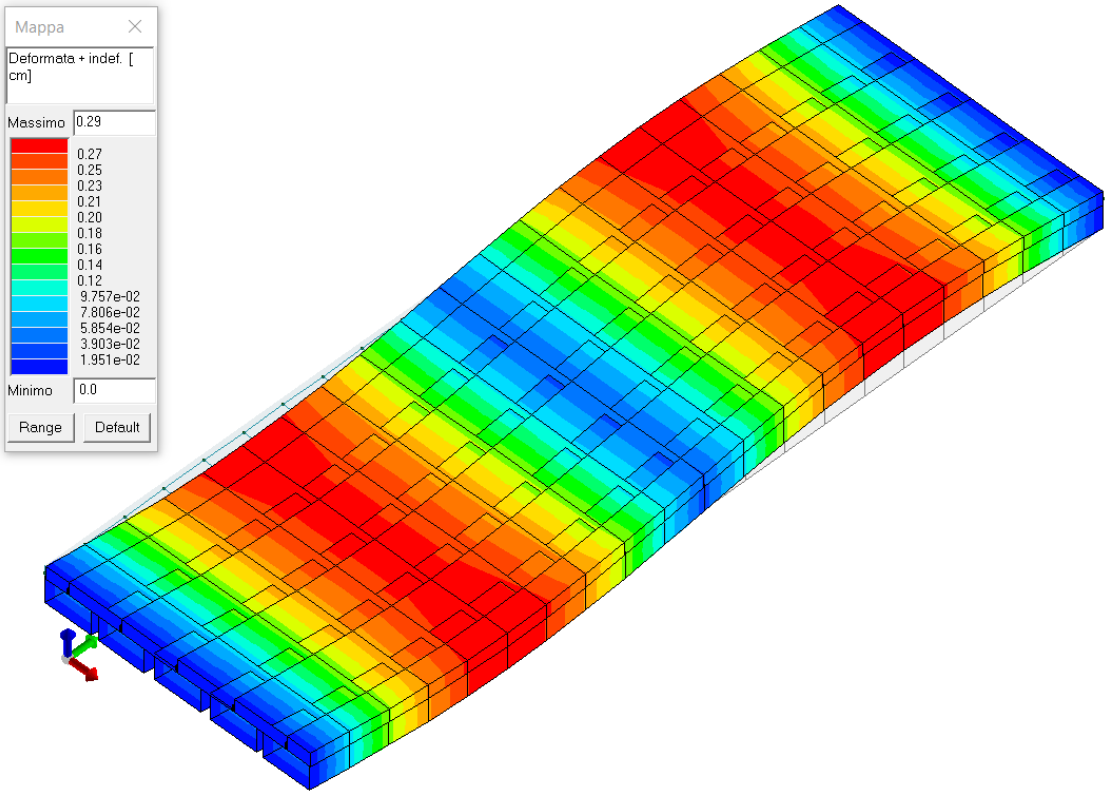

Figura 6-4: Analisi DINAMICA - MODO SUPERIORE III°

6.3 RISULTATI ANALISI IN CAMPO STATICO

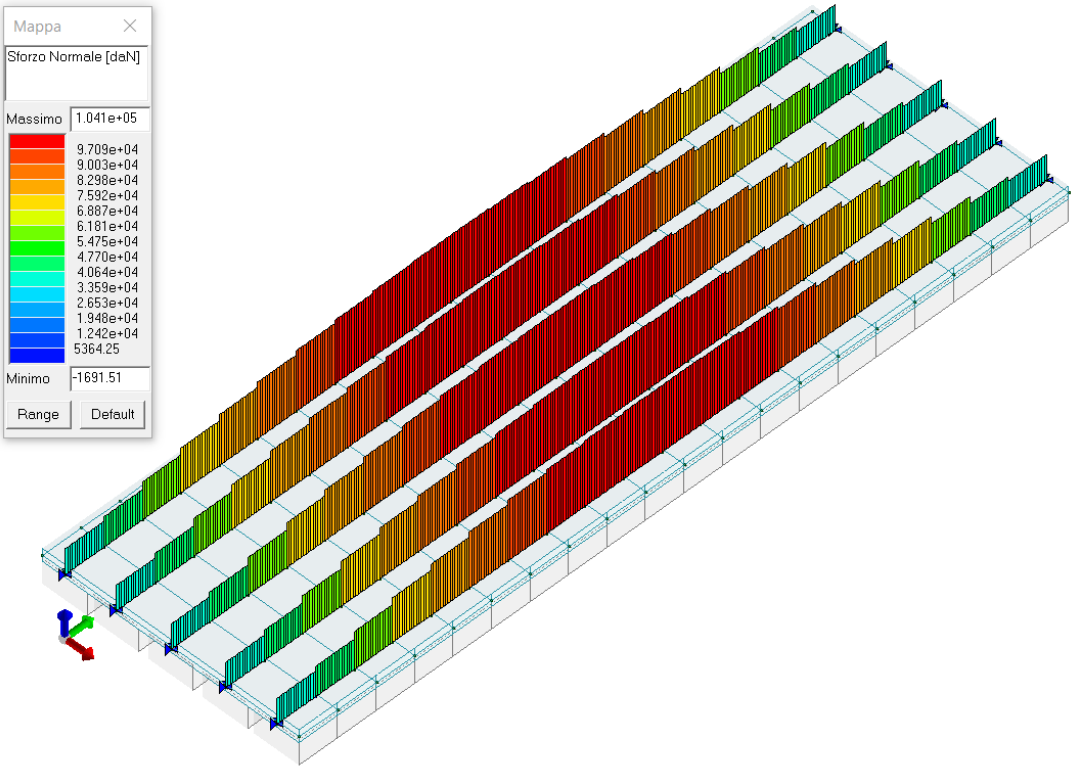

Figura 6-5: Combinazione STATICA SLU A1 1 – Sforzo normale

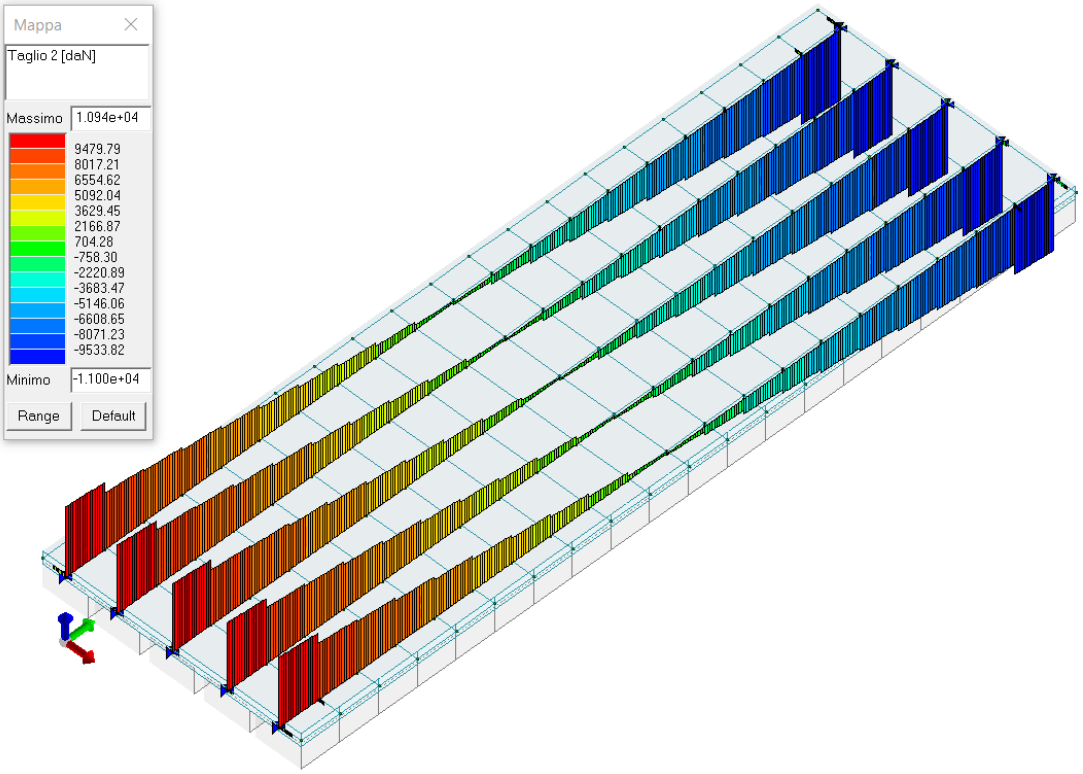

Figura 6-6: Combinazione STATICA SLU A1 1 – Taglio 2

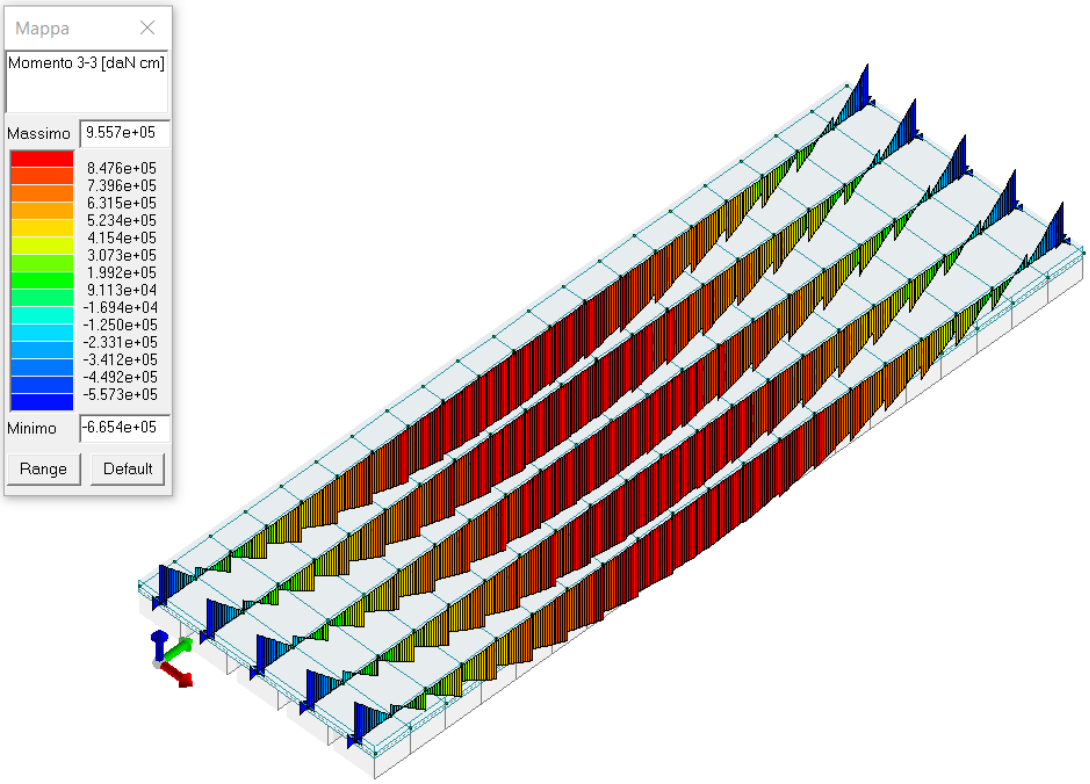

Figura 6-7: Combinazione STATICA SLU A1 1 – Momento flessione asse inerzia maggiore

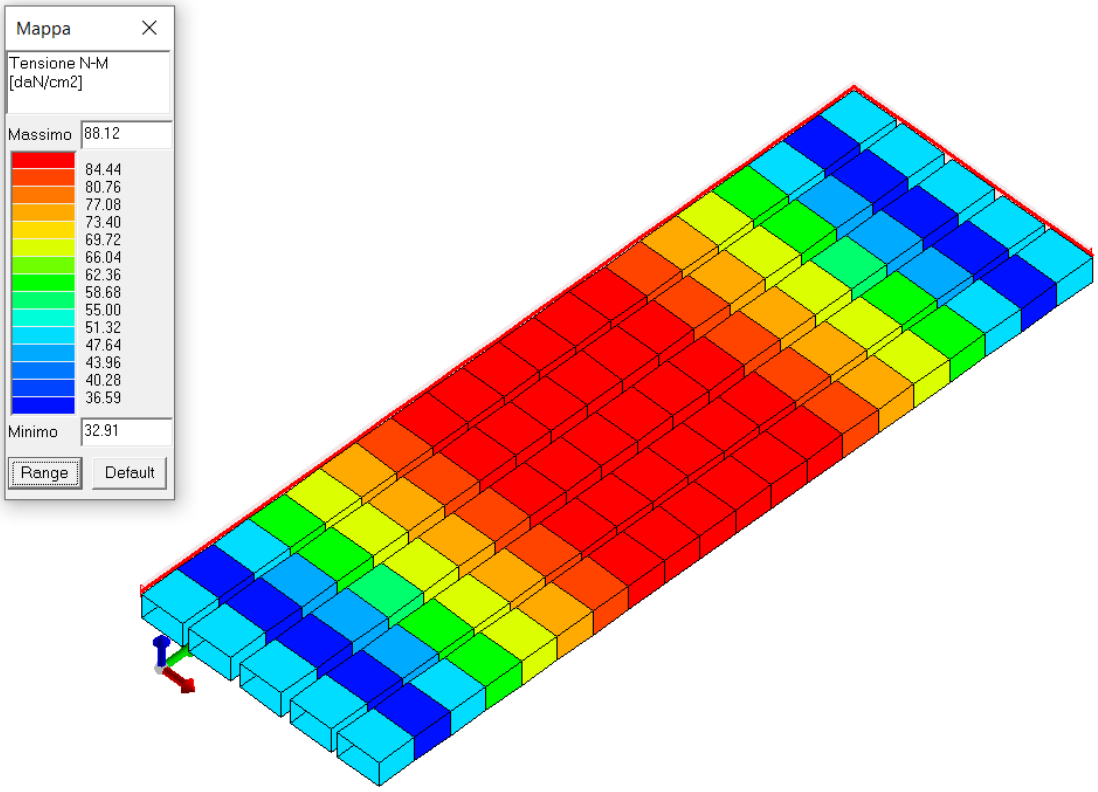

Figura 6-8: Combinazione STATICA SLU A1 1 – Tensione presso-flessione

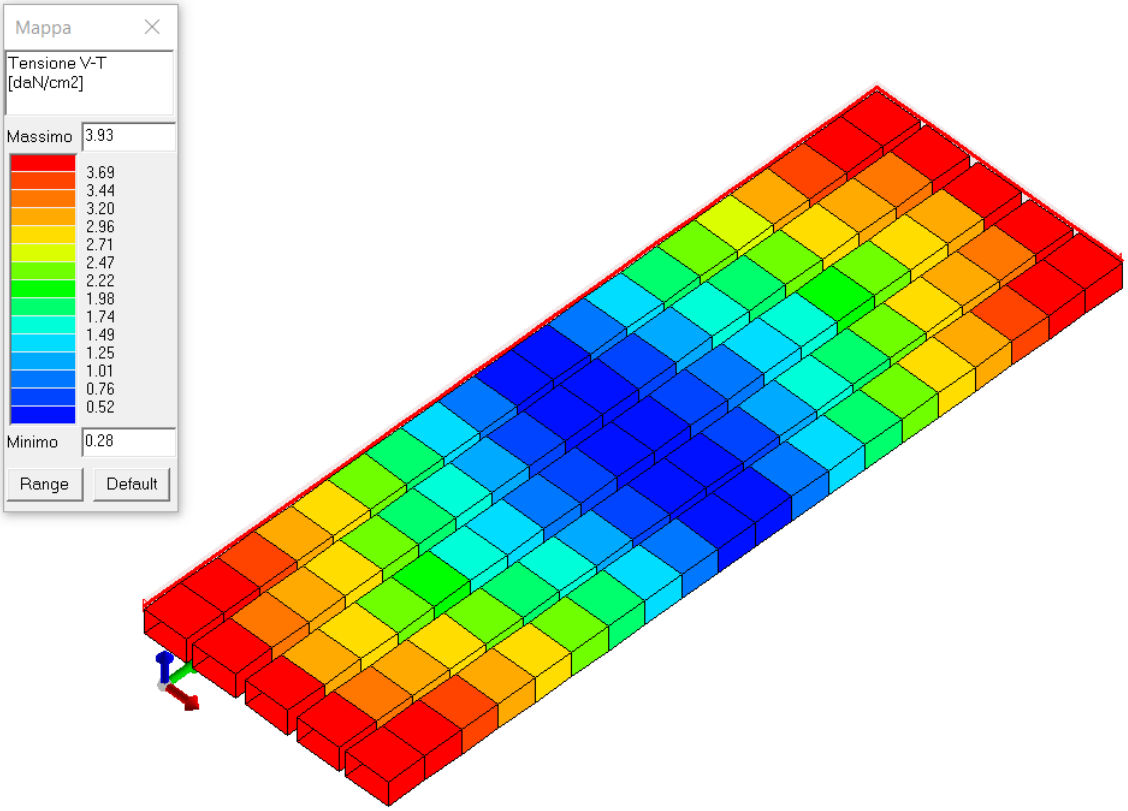

Figura 6-9: Combinazione STATICA SLU A1 1 – Tensione taglio-torsione

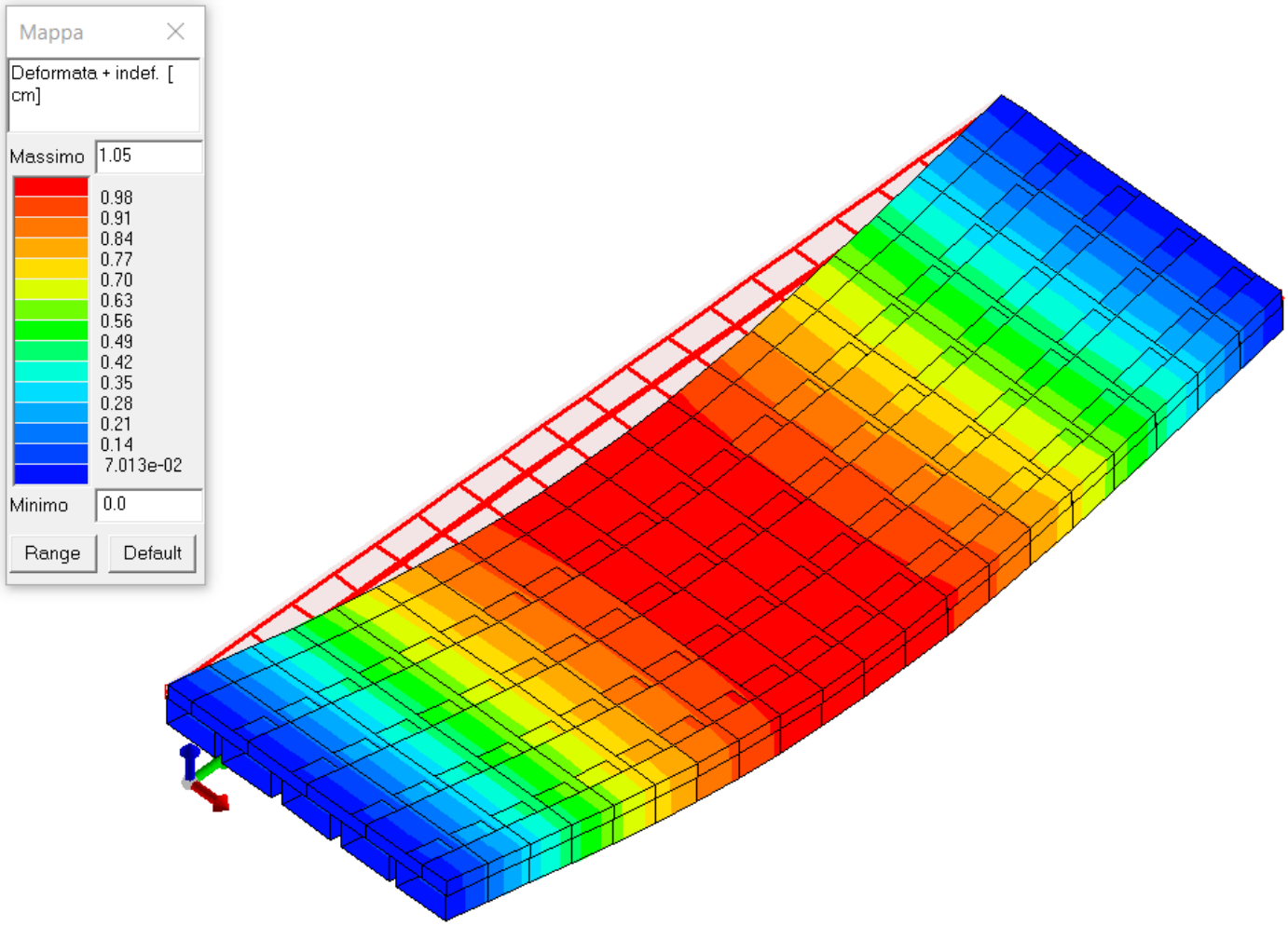

Figura 6-10: Combinazione STATICA SLU A1 1 – Max deformata

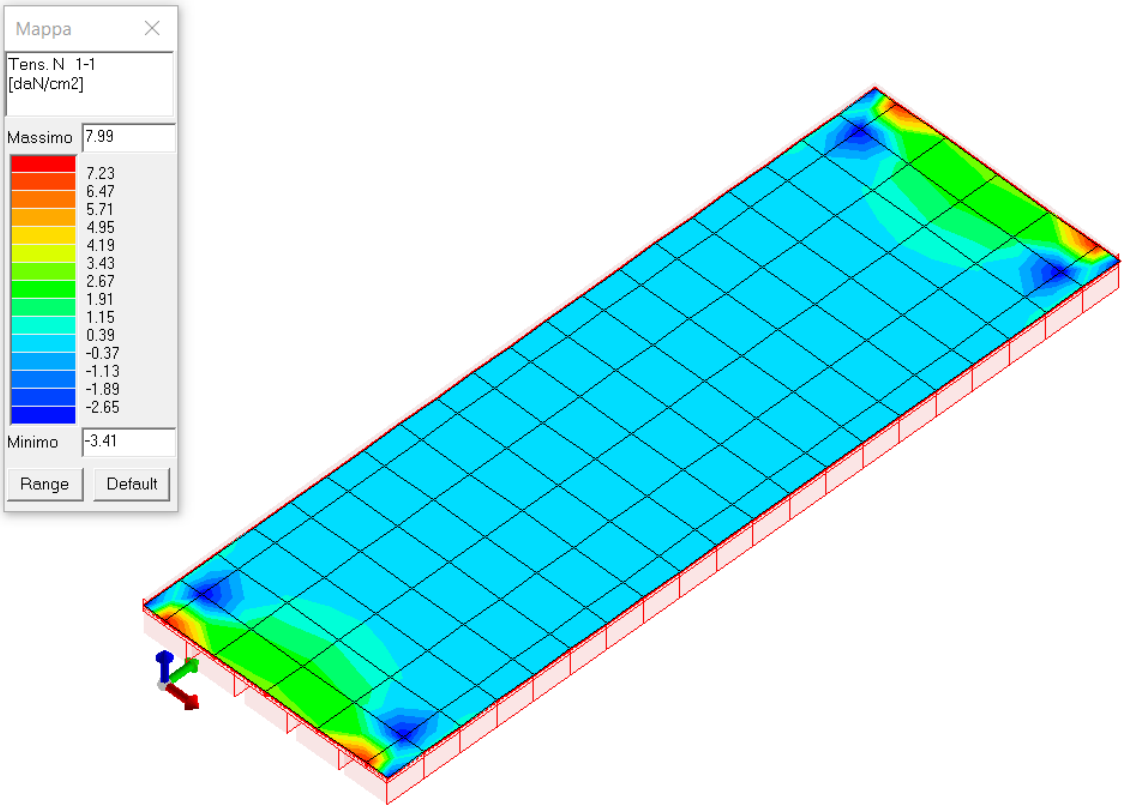

Figura 6-11: Combinazione STATICA SLU A1 1 – Max tensione sforzo N

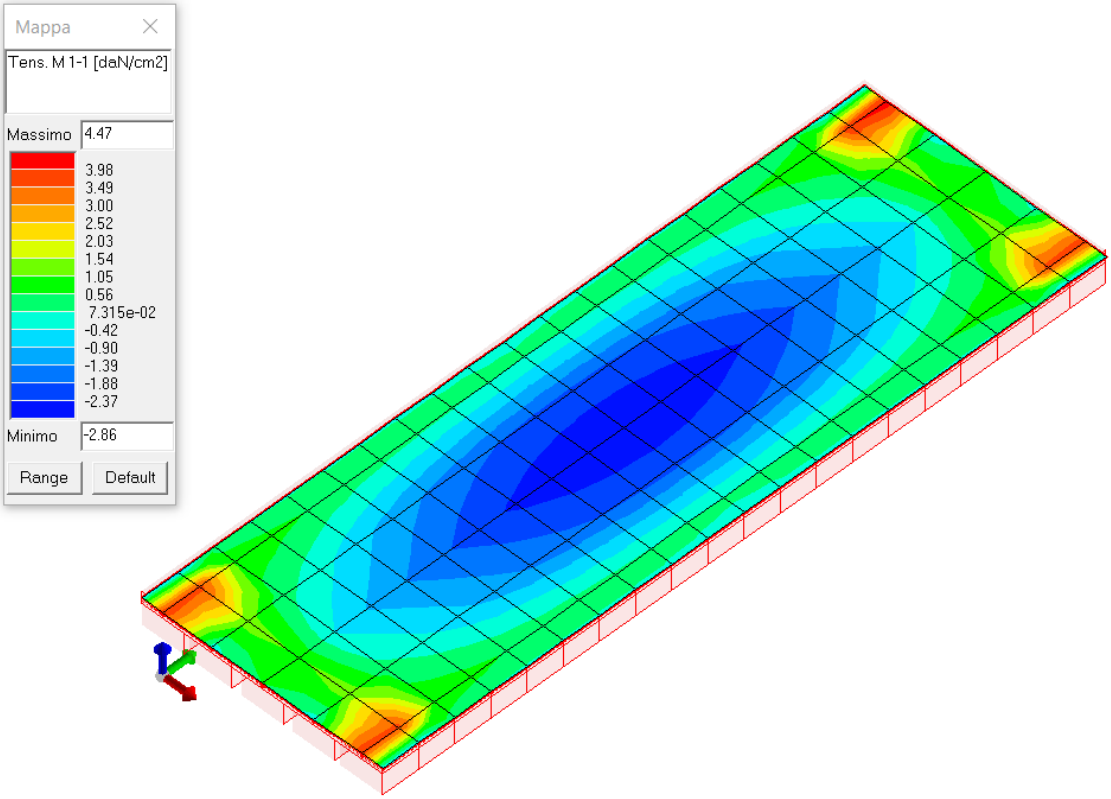

Figura 6-12: Combinazione STATICA SLU A1 1 – Max tensione sforzo M

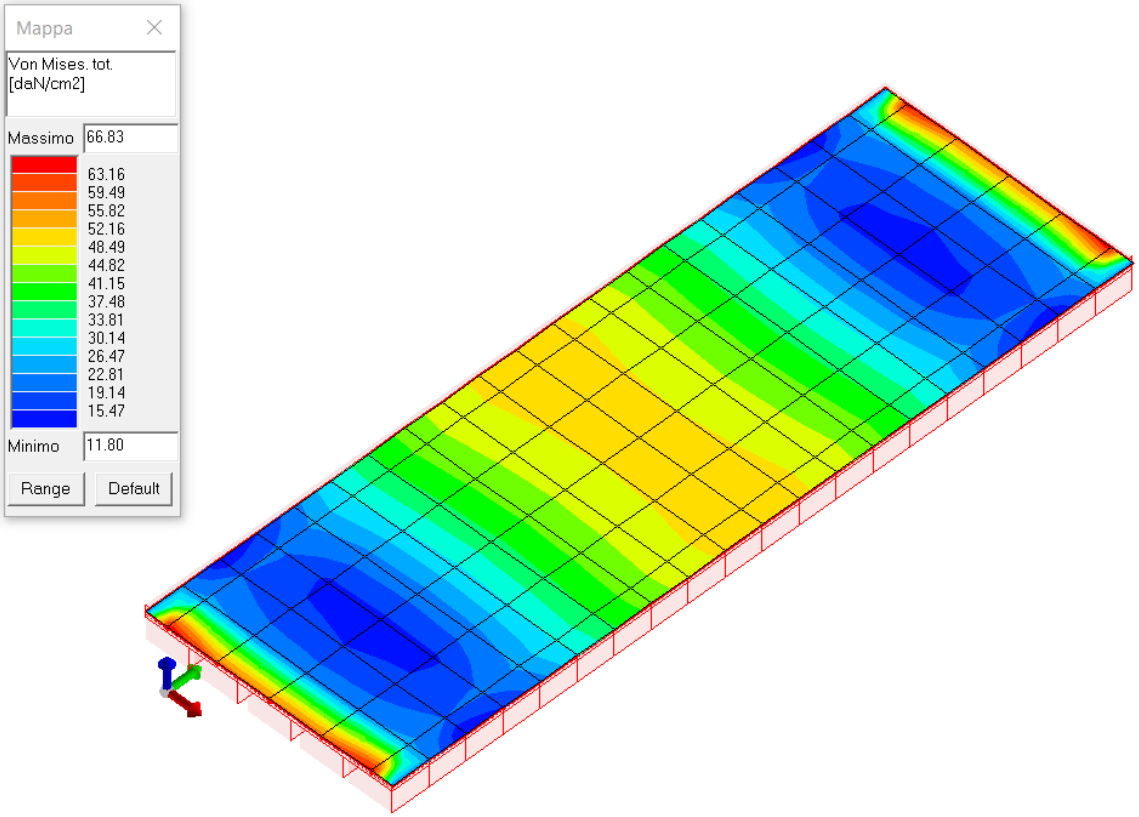

Figura 6-13: Combinazione STATICA SLU A1 1 – Max tensione

6.4 RISULTATI ANALISI IN CAMPO SISMICO

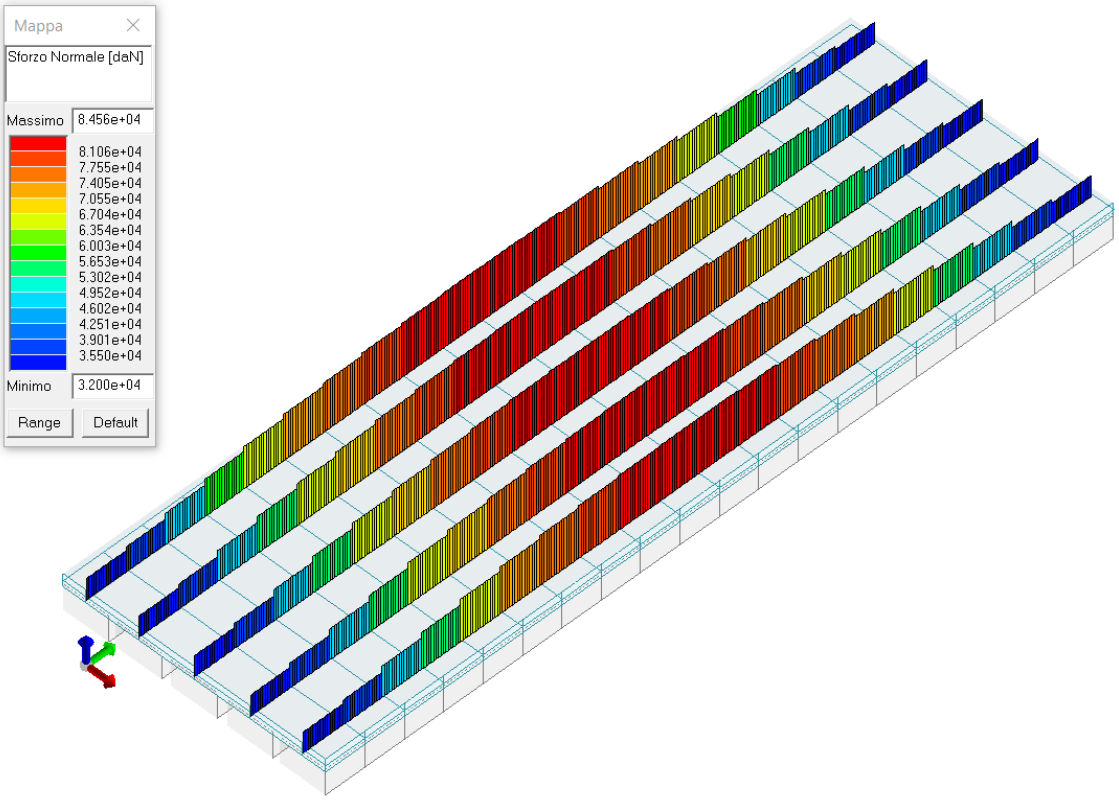

Figura 6-14: Combinazione SISMA SLV A1 – Sforzo normale

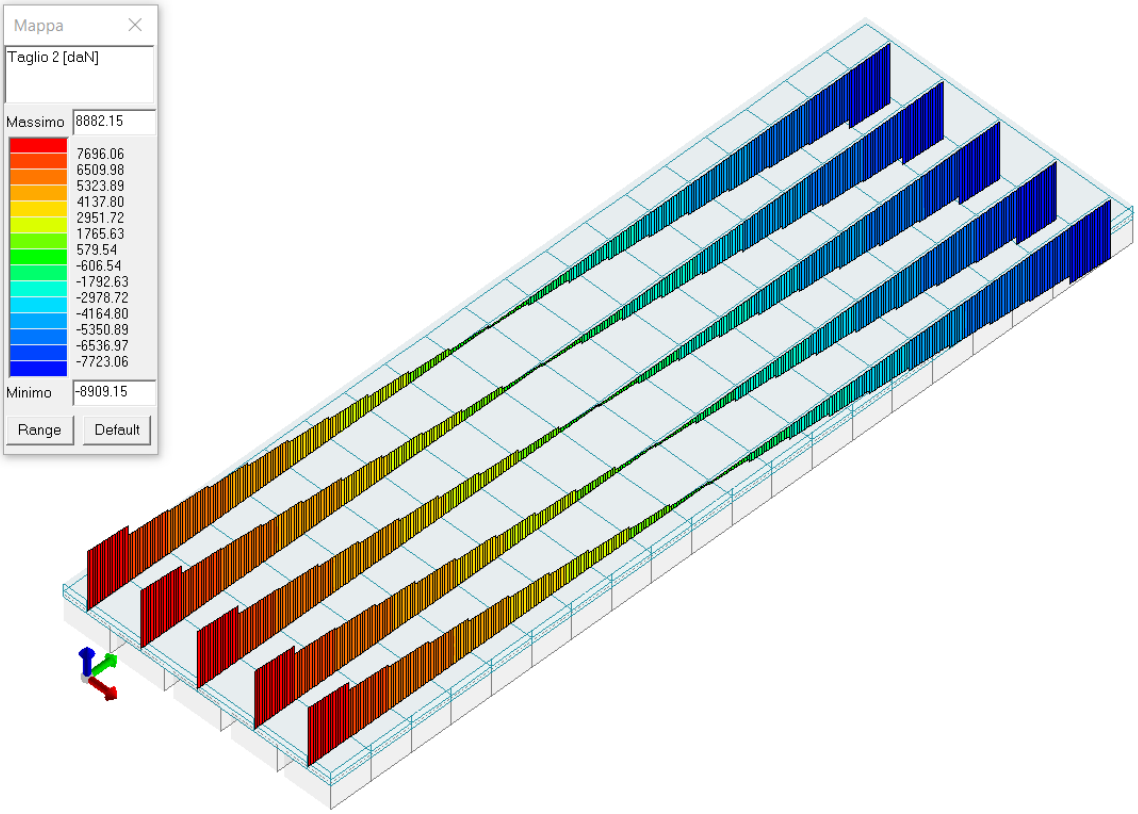

Figura 6-15: Combinazione SISMA SLV A1 – Taglio 2

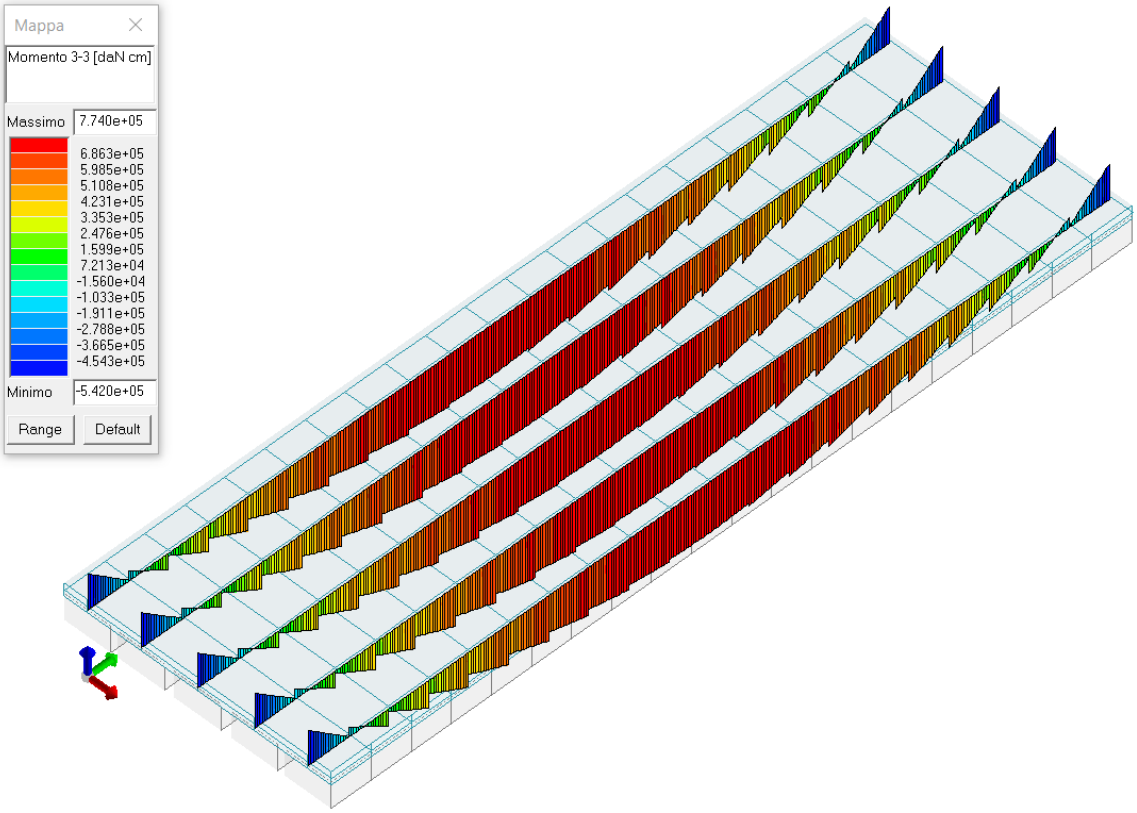

Figura 6-16: Combinazione SISMA SLV A1 – Momento flessione asse inerzia maggiore

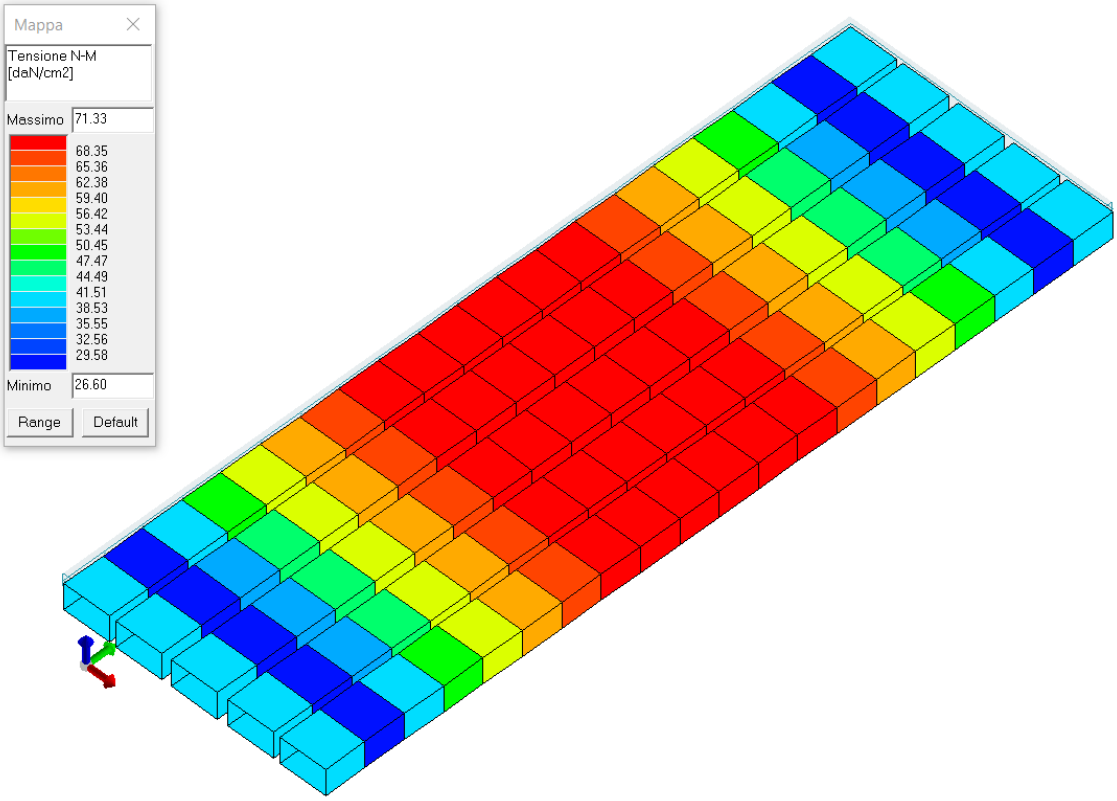

Figura 6-17: Combinazione SISMA SLV A1 – Tensione presso-flessione

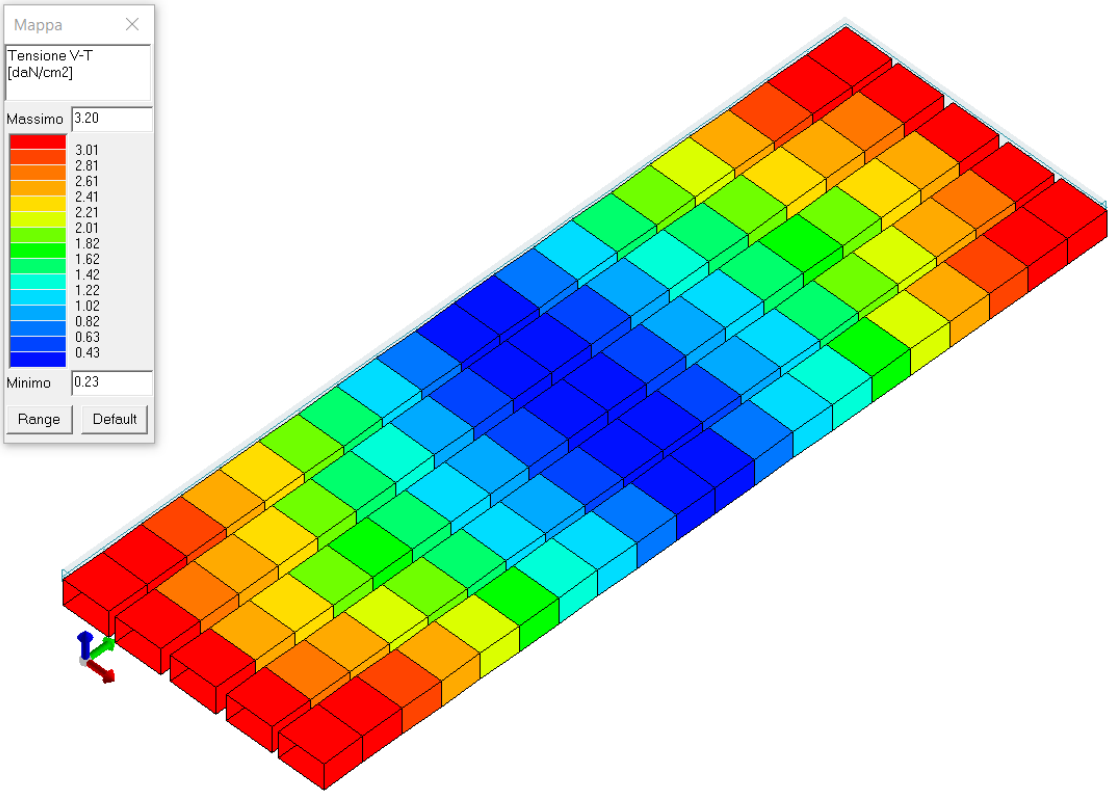

Figura 6-18: Combinazione SISMA SLV A1 – Tensione taglio-torsione

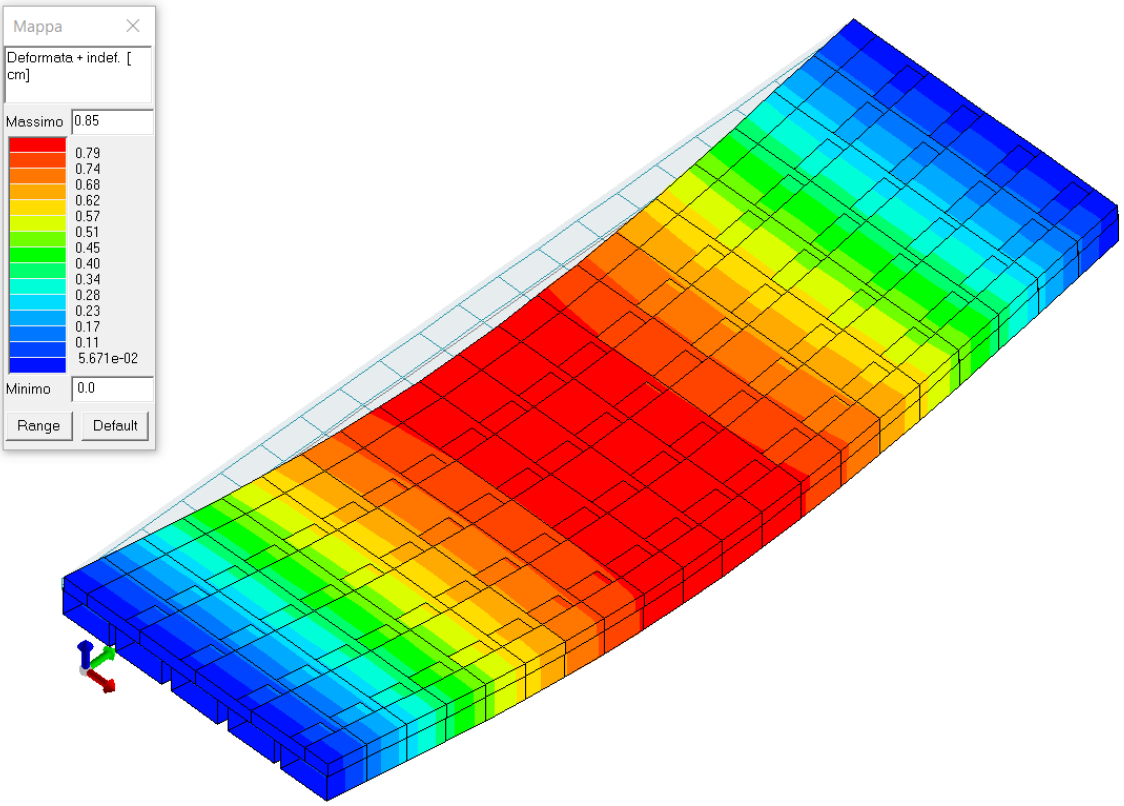

Figura 6-19: Combinazione SISMA SLV A1 – Max deformata

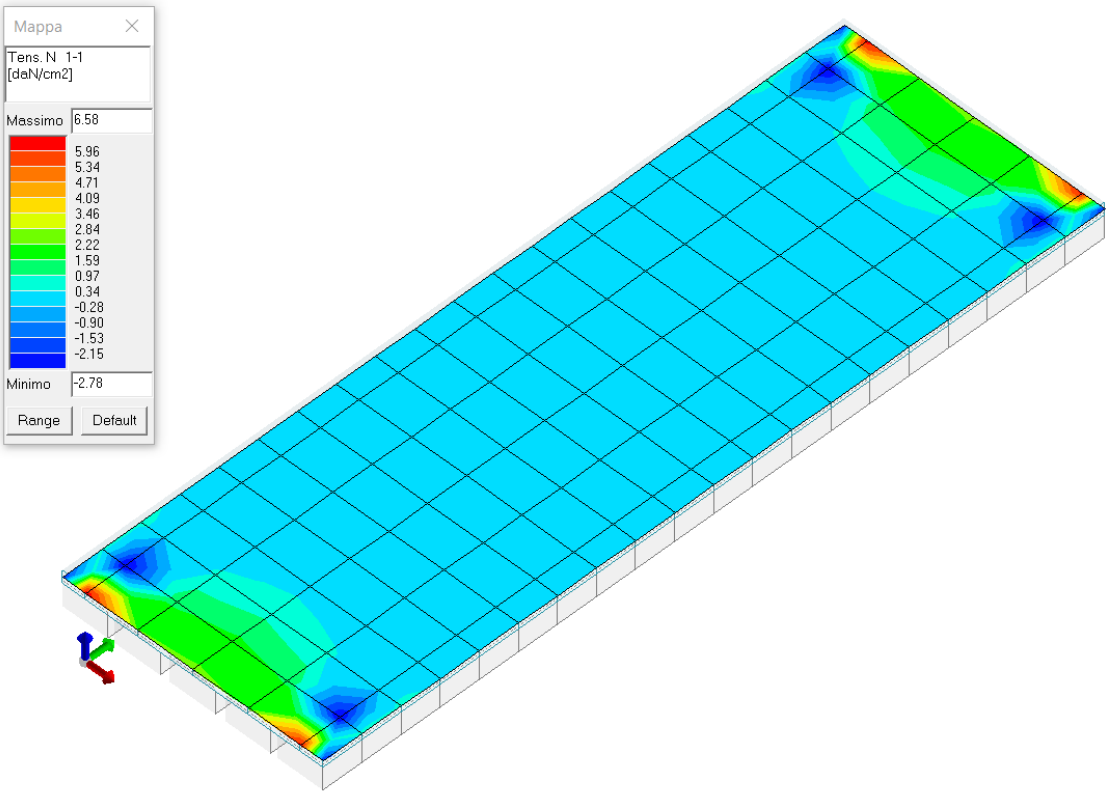

Figura 6-20: Combinazione SISMA SLV A1 – Max tensione sforzo N

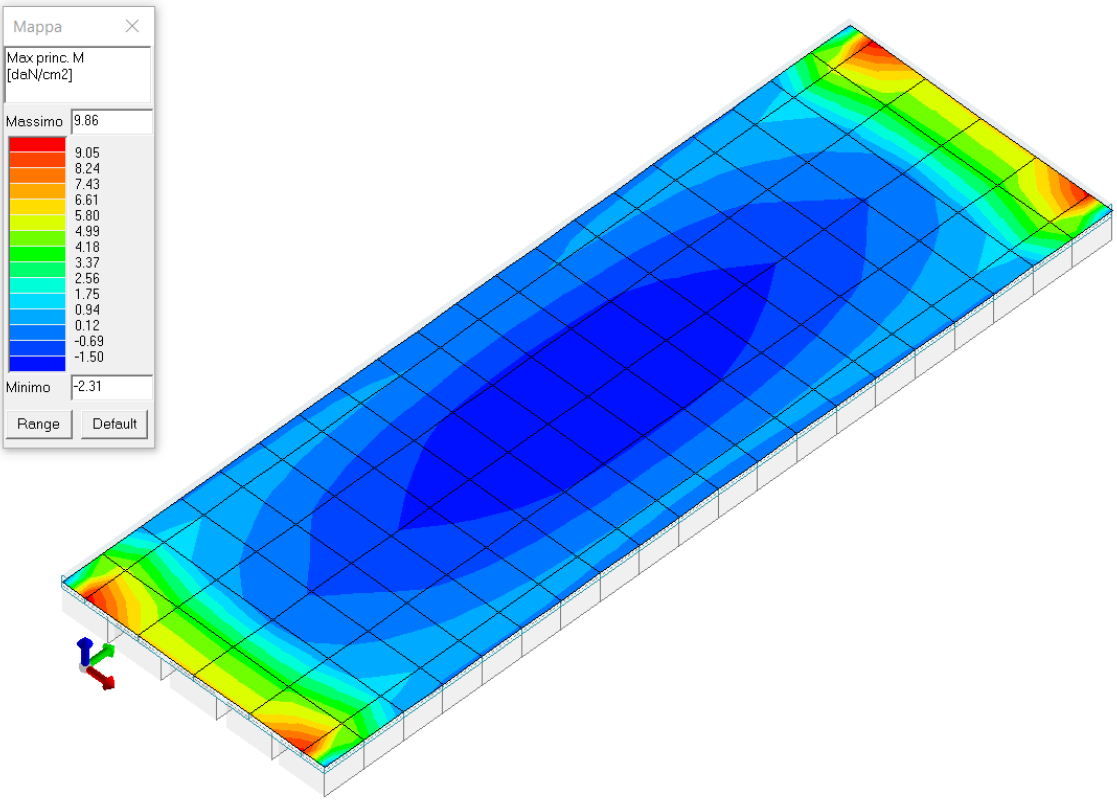

Figura 6-21: Combinazione SISMA SLV A1 – Max tensione sforzo M

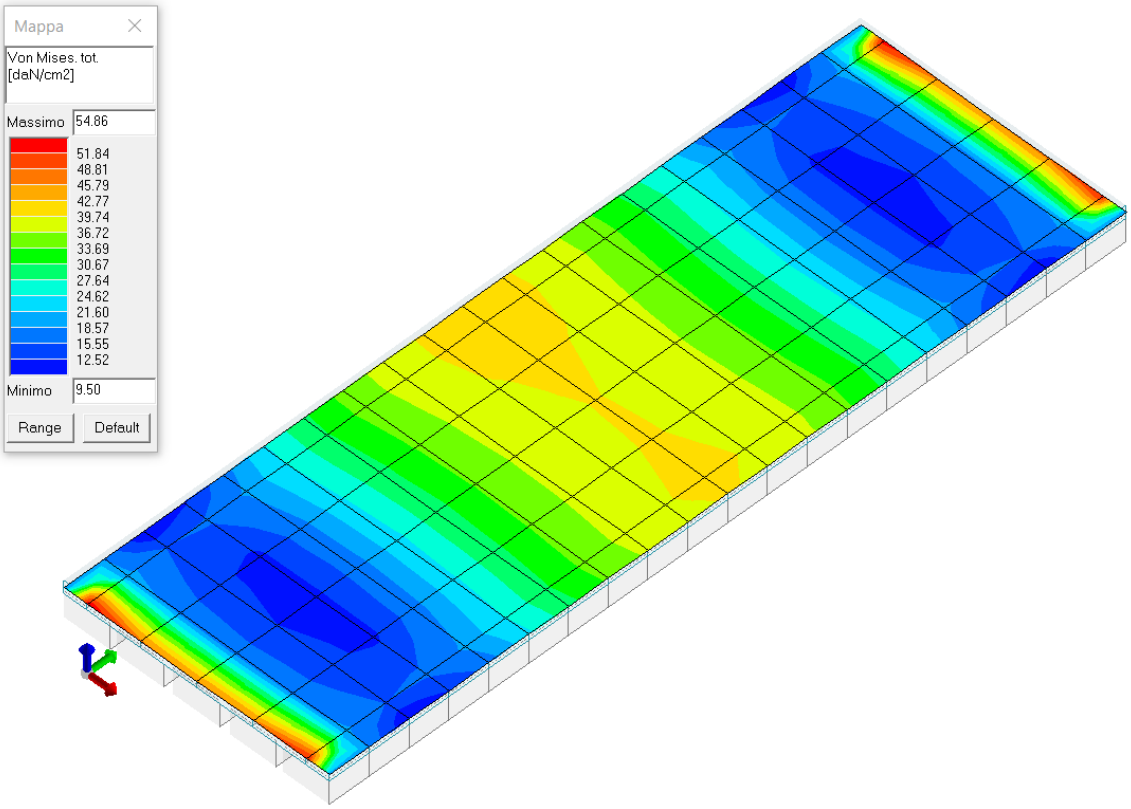

Figura 6-22: Combinazione SISMA SLV A1 – Max tensione

7 VERIFICHE DI SICUREZZA STRUTTURALI - NTC2018

Nei paragrafi seguenti sono riportati i risultati delle analisi e verifiche strutturali eseguite.

Si evidenzia che in ragione della complessità della struttura analizzata, i risultati sono presentati ricorrendo a diagrammi ed abachi riepilogativi e che tutti i risultati analitici e di dettaglio sono riportati nel fascicolo dei calcoli.

7.1 VERIFICHE TRAVI C.A. – NTC2018

Le verifiche strutturali sono eseguite in accordo con le seguenti norme:

- NTC 17 Gennaio 2018

Si riportano di seguito le principali verifiche sugli elementi travi con diagrammi grafici per cui affinché la verifica sia positiva il rapporto deve essere inferiore o uguale a 1.

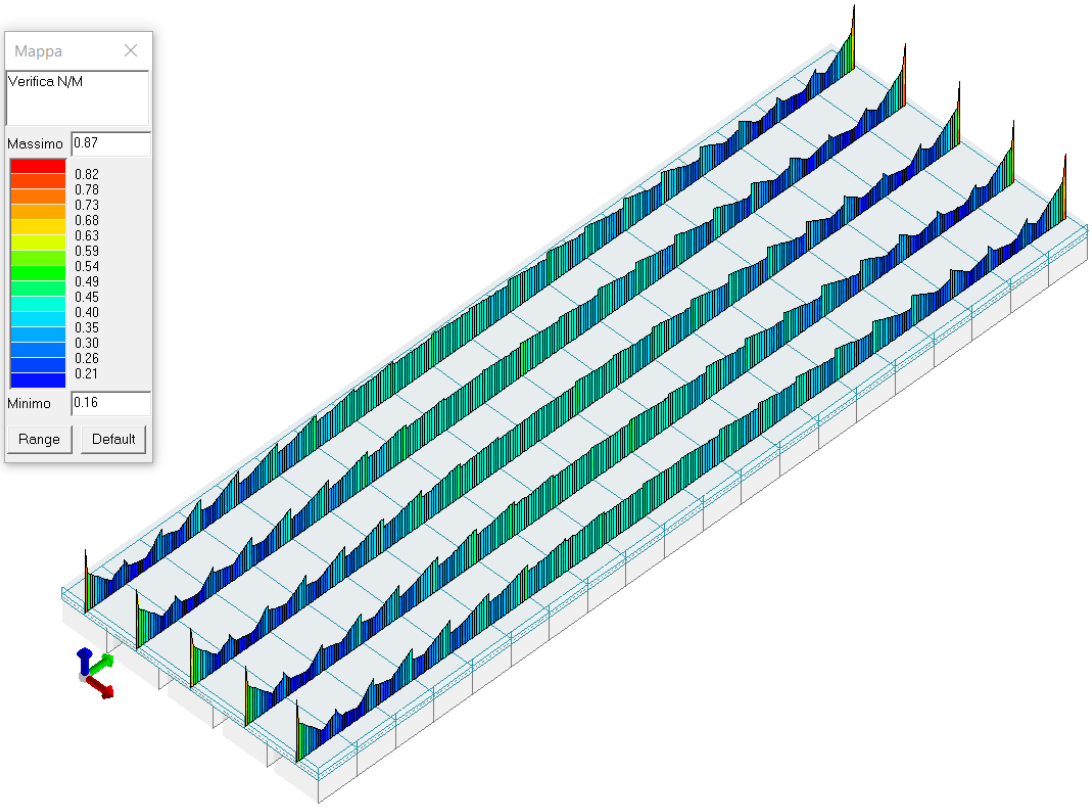

Figura 7-1: VERIFICHE TRAVI – PRESSOFLESSIONE N/M

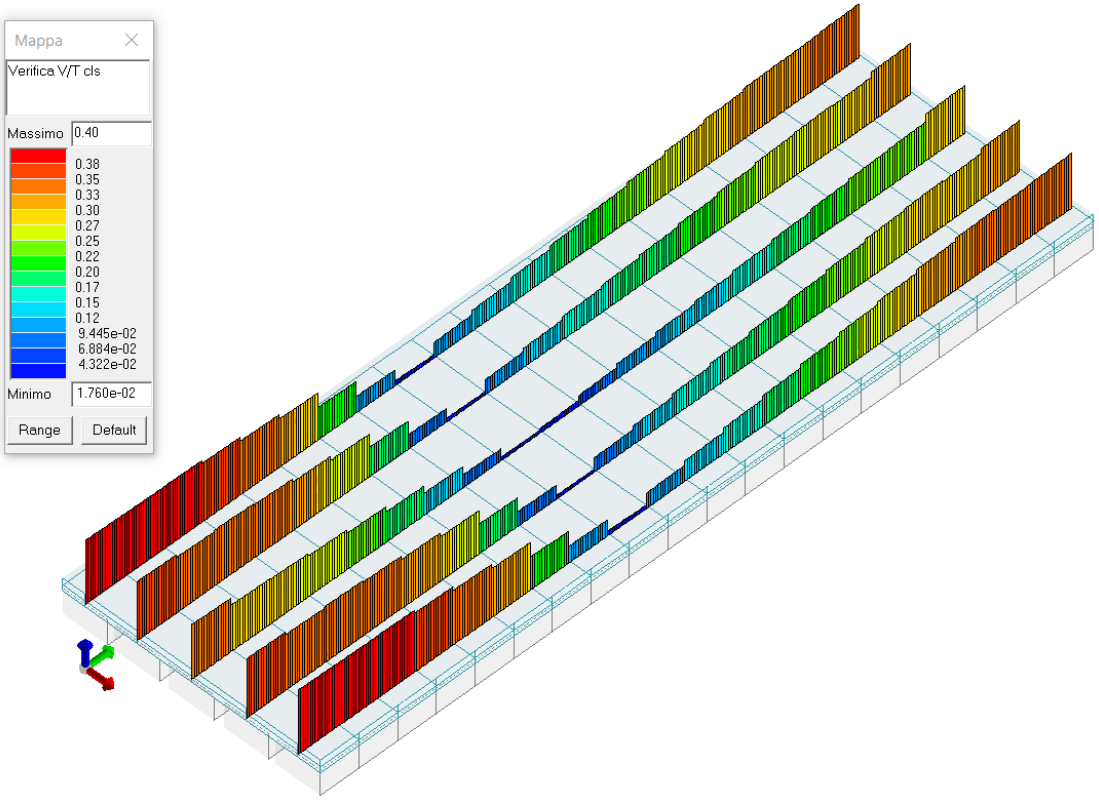

Figura 7-2: VERIFICHE TRAVI – TAGLIO CLS

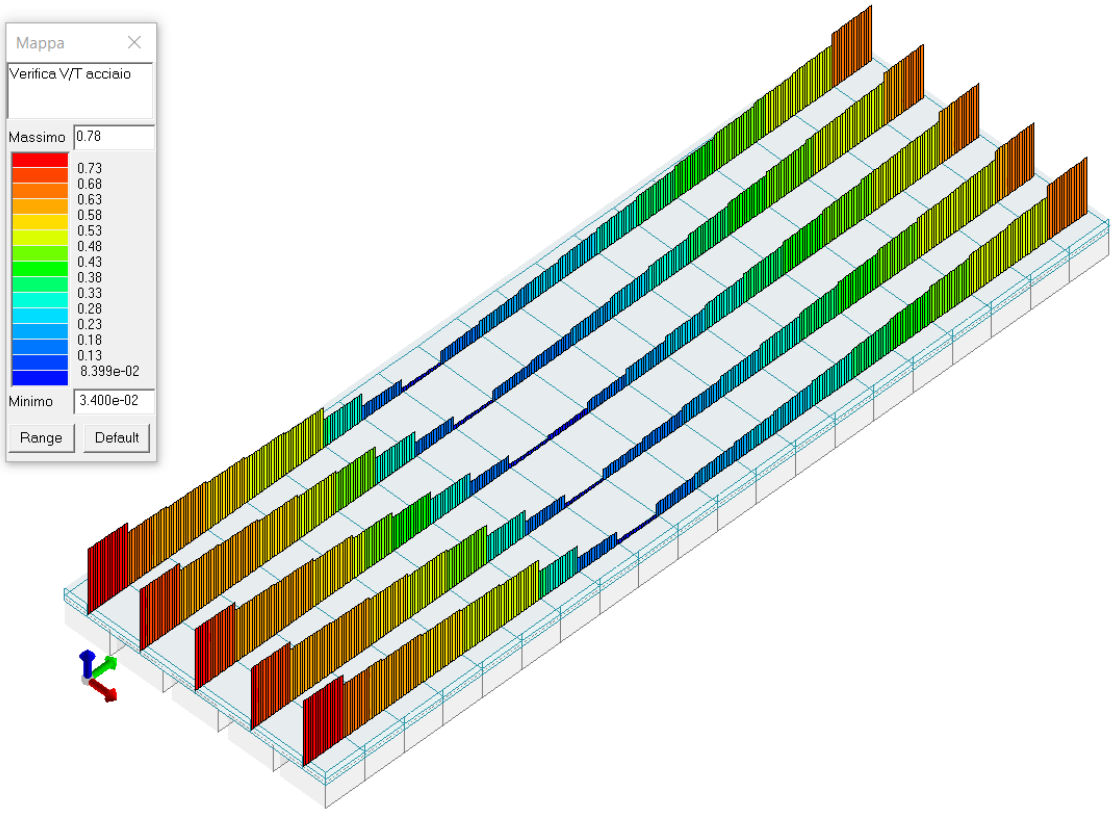

Figura 7-3: VERIFICHE TRAVI – TAGLIO ACCIAIO

Per le verifiche agli S.L. delle travi è presente una tabella con i simboli di seguito descritti:

M_T Z P P	Numero della travata (T), quota media (Z), n° pilastrata iniziale (P) e finale (P) (nodo in assenza di pilastrata)
Trave	numero identificativo dell'elemento D2
Note	Codici identificativi sezione (s) e materiale (m) trave; sono inoltre presenti le sigle relative all'esito delle verifiche effettuate appresso descritte
%Af	Percentuale di area di armatura rispetto a quella di calcestruzzo
Af inf.	Area di armatura longitudinale posta all'intradosso
Af sup	Area di armatura longitudinale posta all'estradosso
Af long.	Area complessiva armatura longitudinale
x/d	rapporto tra posizione dell'asse neutro e altezza utile
V N/M	Verifica a pressoflessione rapporto Ed/Rd: valore minore o uguale a 1 per verifica positiva
Staffe	Dati tratto di staffatura oggetto di verifica, nello specifico: numero delle braccia, diametro, passo, lunghezza L tratto
V V/T cls	Verifica a taglio/torsione con rapporto Ved/Vrd: valore minore o uguale a 1 per verifica positiva
Rif. cmb.	Riferimento combinazioni da cui si generano le verifiche più gravose per la trave

							M_T= 1	**Z=100.0**	**P=1**	**P=101**			
Trave	Note	Pos.	%Af	Af inf.	Af. sup	Af long.	x/d	V N/M	V V/T cls	V V/T acc	Staffe	Rif. cmb	
		cm									L=cm		
1	ok,ok	0.0	1.05	13.4	29.5	0.0	0.23	0.85	0.40	0.78	3d8/12 L=60	2,2,2	
	s=1,m=6	60.0	1.27	13.4	35.5	0.0	0.26	0.30	0.39	0.77	3d8/12 L=60	28,2,2	
2	ok,ok	0.0	0.98	25.5	27.5	0.0	0.20	0.35	0.39	0.64	3d8/12 L=60	2,2,2	
	s=1,m=6	60.0	1.20	33.5	17.4	0.0	0.24	0.40	0.39	0.63	3d8/12 L=60	2,2,2	
3	ok,ok	0.0	1.41	39.5	19.4	0.0	0.26	0.30	0.39	0.61	3d8/12 L=60	33,2,2	
	s=1,m=6	60.0	1.70	47.6	15.4	0.0	0.33	0.43	0.38	0.59	3d8/12 L=60	2,2,2	
4	ok,ok	0.0	1.92	53.6	19.4	0.0	0.34	0.28	0.37	0.57	3d8/12 L=60	45,2,2	
	s=1,m=6	60.0	2.13	59.7	15.4	0.0	0.42	0.45	0.36	0.56	3d8/12 L=60	2,2,2	
5	NV,ok	0.0	2.35	65.7	19.4	0.0	0.44	0.27	0.34	0.53	3d8/12 L=60	27,2,2	
	s=1,m=6	60.0	2.56	71.7	15.4	0.0	0.54	0.45	0.33	0.52	3d8/12 L=60	2,2,2	
6	NV,ok	0.0	2.70	75.7	19.4	0.0	0.54	0.31	0.30	0.50	3d8/12 L=60	2,2,2	
	s=1,m=6	60.0	2.92	81.8	15.4	0.0	0.63	0.46	0.30	0.48	3d8/12 L=60	2,2,2	
7	NV,ok	0.0	3.06	85.8	17.4	0.0	0.64	0.36	0.20	0.34	3d8/12 L=60	2,2,2	
	s=1,m=6	60.0	3.21	89.8	15.4	0.0	0.66	0.45	0.20	0.32	3d8/12 L=60	2,2,2	
8	NV,ok	0.0	3.21	89.8	15.4	0.0	0.66	0.41	0.10	0.17	3d8/12 L=60	2,2,2	
	s=1,m=6	60.0	3.28	91.8	13.4	0.0	0.66	0.45	0.10	0.16	3d8/12 L=60	2,2,2	
9	NV,ok	0.0	3.42	95.8	15.4	0.0	0.67	0.41	0.03	0.05	3d8/12 L=60	2,1,1	
	s=1,m=6	60.0	3.42	95.8	15.4	0.0	0.67	0.41	0.02	0.04	3d8/12 L=60	2,1,1	
10	NV,ok	0.0	3.28	91.8	15.4	0.0	0.66	0.45	0.10	0.16	3d8/12 L=60	2,20,16	
	s=1,m=6	60.0	3.21	89.8	15.4	0.0	0.66	0.41	0.10	0.17	3d8/12 L=60	2,20,16	
11	NV,ok	0.0	3.21	89.8	15.4	0.0	0.66	0.43	0.13	0.19	3d8/12 L=60	2,2,2	
	s=1,m=6	60.0	3.06	85.8	17.4	0.0	0.64	0.39	0.14	0.21	3d8/12 L=60	2,2,2	
12	NV,ok	0.0	2.99	83.8	15.4	0.0	0.64	0.45	0.16	0.23	3d8/12 L=60	2,2,2	
	s=1,m=6	60.0	2.92	81.8	17.4	0.0	0.61	0.37	0.17	0.24	3d8/12 L=60	2,2,2	
13	NV,ok	0.0	2.78	77.7	15.4	0.0	0.59	0.45	0.19	0.27	3d8/12 L=60	2,2,2	
	s=1,m=6	60.0	2.70	75.7	17.4	0.0	0.56	0.36	0.20	0.28	3d8/12 L=60	2,2,2	
14	NV,ok	0.0	2.63	73.7	15.4	0.0	0.56	0.43	0.22	0.31	3d8/12 L=60	2,2,2	
	s=1,m=6	60.0	2.49	69.7	17.4	0.0	0.50	0.33	0.22	0.33	3d8/12 L=60	2,2,2	
15	NV,ok	0.0	2.35	65.7	15.4	0.0	0.48	0.44	0.24	0.35	3d8/12 L=60	2,2,2	
	s=1,m=6	60.0	2.20	61.7	17.4	0.0	0.42	0.29	0.25	0.37	3d8/12 L=60	2,2,2	
16	ok,ok	0.0	2.06	57.6	15.4	0.0	0.40	0.44	0.27	0.40	3d8/12 L=60	2,2,2	
	s=1,m=6	60.0	1.92	53.6	19.4	0.0	0.34	0.27	0.28	0.41	3d8/12 L=60	36,2,2	
17	ok,ok	0.0	1.77	49.6	15.4	0.0	0.34	0.42	0.29	0.44	3d8/12 L=60	2,2,2	
	s=1,m=6	60.0	1.56	43.6	19.4	0.0	0.28	0.28	0.30	0.45	3d8/12 L=60	50,2,2	
18	ok,ok	0.0	1.41	39.5	15.4	0.0	0.28	0.40	0.32	0.48	3d8/12 L=60	2,2,2	
	s=1,m=6	60.0	1.20	33.5	21.5	0.0	0.23	0.27	0.32	0.49	3d8/12 L=60	26,2,2	
19	ok,ok	0.0	0.98	27.5	19.4	0.0	0.21	0.35	0.32	0.51	3d8/12 L=60	2,2,2	
	s=1,m=6	60.0	0.98	19.4	27.5	0.0	0.21	0.37	0.33	0.53	3d8/12 L=60	2,2,2	
20	ok,ok	0.0	1.27	13.4	35.5	0.0	0.26	0.30	0.33	0.65	3d8/12 L=60	35,2,2	
	s=1,m=6	60.0	1.05	13.4	29.5	0.0	0.23	0.86	0.34	0.66	3d8/12 L=60	2,2,2	
							M_T= 2	**Z=100.0**	**P=2**	**P=102**			
Trave	Note	Pos.	%Af	Af inf.	Af. sup	Af long.	x/d	V N/M	V V/T cls	V V/T acc	Staffe	Rif. cmb	
21	ok,ok	0.0	1.05	13.4	29.5	0.0	0.23	0.81	0.37	0.74	3d8/12 L=60	2,2,2	
	s=1,m=6	60.0	1.20	13.4	33.5	0.0	0.25	0.29	0.36	0.72	3d8/12 L=60	28,2,2	

22	ok,ok	0.0	0.98	23.5	27.5	0.0	0.20	0.35	0.35	0.63	3d8/12 L=60	2,2,2	
	s=1,m=6	60.0	1.20	33.5	17.4	0.0	0.24	0.37	0.34	0.61	3d8/12 L=60	2,2,2	
23	ok,ok	0.0	1.41	39.5	19.4	0.0	0.26	0.30	0.35	0.60	3d8/12 L=60	25,2,2	
	s=1,m=6	60.0	1.70	47.6	15.4	0.0	0.33	0.41	0.34	0.59	3d8/12 L=60	2,2,2	
24	ok,ok	0.0	1.84	51.6	19.4	0.0	0.33	0.28	0.33	0.56	3d8/12 L=60	25,2,2	
	s=1,m=6	60.0	2.13	59.7	15.4	0.0	0.42	0.43	0.32	0.54	3d8/12 L=60	2,2,2	
25	NV,ok	0.0	2.27	63.7	19.4	0.0	0.42	0.27	0.30	0.51	3d8/12 L=60	27,2,2	
	s=1,m=6	60.0	2.49	69.7	15.4	0.0	0.52	0.45	0.30	0.50	3d8/12 L=60	2,2,2	
26	NV,ok	0.0	2.63	73.7	17.4	0.0	0.54	0.32	0.27	0.48	3d8/12 L=60	2,2,2	
	s=1,m=6	60.0	2.85	79.8	15.4	0.0	0.61	0.46	0.27	0.46	3d8/12 L=60	2,2,2	
27	NV,ok	0.0	2.92	81.8	17.4	0.0	0.61	0.37	0.18	0.32	3d8/12 L=60	2,2,2	
	s=1,m=6	60.0	3.06	85.8	13.4	0.0	0.65	0.46	0.18	0.31	3d8/12 L=60	2,2,2	
28	NV,ok	0.0	3.14	87.8	15.4	0.0	0.65	0.40	0.09	0.17	3d8/12 L=60	2,2,2	
	s=1,m=6	60.0	3.21	89.8	13.4	0.0	0.66	0.45	0.08	0.16	3d8/12 L=60	2,2,2	
29	NV,ok	0.0	3.28	91.8	13.4	0.0	0.66	0.42	0.03	0.05	3d8/12 L=60	2,1,1	
	s=1,m=6	60.0	3.28	91.8	13.4	0.0	0.66	0.42	0.02	0.03	3d8/12 L=60	2,1,1	
30	NV,ok	0.0	3.21	89.8	13.4	0.0	0.66	0.45	0.09	0.14	3d8/12 L=60	2,20,16	
	s=1,m=6	60.0	3.14	87.8	15.4	0.0	0.65	0.41	0.10	0.15	3d8/12 L=60	2,20,16	
31	NV,ok	0.0	3.06	85.8	13.4	0.0	0.65	0.45	0.12	0.17	3d8/12 L=60	2,2,2	
	s=1,m=6	60.0	2.99	83.8	15.4	0.0	0.64	0.40	0.13	0.18	3d8/12 L=60	2,2,2	
32	NV,ok	0.0	2.99	83.8	15.4	0.0	0.64	0.44	0.15	0.21	3d8/12 L=60	2,2,2	
	s=1,m=6	60.0	2.92	81.8	15.4	0.0	0.63	0.37	0.15	0.22	3d8/12 L=60	2,2,2	
33	NV,ok	0.0	2.78	77.7	15.4	0.0	0.59	0.45	0.17	0.25	3d8/12 L=60	2,2,2	
	s=1,m=6	60.0	2.70	75.7	17.4	0.0	0.56	0.36	0.18	0.27	3d8/12 L=60	2,2,2	
34	NV,ok	0.0	2.56	71.7	15.4	0.0	0.54	0.45	0.19	0.30	3d8/12 L=60	2,2,2	
	s=1,m=6	60.0	2.42	67.7	17.4	0.0	0.48	0.34	0.20	0.32	3d8/12 L=60	2,2,2	
35	NV,ok	0.0	2.35	65.7	15.4	0.0	0.48	0.44	0.21	0.35	3d8/12 L=60	2,2,2	
	s=1,m=6	60.0	2.20	61.7	17.4	0.0	0.42	0.29	0.22	0.36	3d8/12 L=60	2,2,2	
36	ok,ok	0.0	2.06	57.6	15.4	0.0	0.40	0.43	0.24	0.39	3d8/12 L=60	2,2,2	
	s=1,m=6	60.0	1.92	53.6	19.4	0.0	0.34	0.27	0.24	0.41	3d8/12 L=60	36,2,2	
37	ok,ok	0.0	1.77	49.6	15.4	0.0	0.34	0.41	0.26	0.44	3d8/12 L=60	2,2,2	
	s=1,m=6	60.0	1.56	43.6	19.4	0.0	0.28	0.28	0.26	0.45	3d8/12 L=60	34,2,2	
38	ok,ok	0.0	1.41	39.5	17.4	0.0	0.27	0.39	0.27	0.48	3d8/12 L=60	2,2,2	
	s=1,m=6	60.0	1.20	33.5	21.5	0.0	0.23	0.27	0.28	0.50	3d8/12 L=60	34,2,2	
39	ok,ok	0.0	0.98	27.5	21.5	0.0	0.20	0.33	0.27	0.51	3d8/12 L=60	2,2,2	
	s=1,m=6	60.0	1.05	19.4	29.5	0.0	0.21	0.33	0.28	0.52	3d8/12 L=60	2,2,2	
40	ok,ok	0.0	1.27	13.4	35.5	0.0	0.26	0.29	0.31	0.63	3d8/12 L=60	35,2,2	
	s=1,m=6	60.0	1.05	13.4	29.5	0.0	0.23	0.84	0.32	0.64	3d8/12 L=60	2,2,2	
							M_T= 3	**Z=100.0**	**P=3**	**P=103**			
Trave	Note	Pos.	%Af	Af inf.	Af. sup	Af long.	x/d	V N/M	V V/T cls	V V/T acc	Staffe	Rif. cmb	
83	ok,ok	0.0	1.05	13.4	29.5	0.0	0.23	0.81	0.34	0.74	3d8/12 L=60	2,2,2	
	s=1,m=6	60.0	1.20	13.4	33.5	0.0	0.25	0.29	0.34	0.72	3d8/12 L=60	42,2,2	
84	ok,ok	0.0	0.98	23.5	27.5	0.0	0.20	0.35	0.29	0.63	3d8/12 L=60	2,2,2	
	s=1,m=6	60.0	1.20	33.5	17.4	0.0	0.24	0.37	0.28	0.61	3d8/12 L=60	2,2,2	
85	ok,ok	0.0	1.41	39.5	19.4	0.0	0.26	0.30	0.28	0.60	3d8/12 L=60	51,2,2	
	s=1,m=6	60.0	1.70	47.6	15.4	0.0	0.33	0.41	0.27	0.58	3d8/12 L=60	2,2,2	
86	ok,ok	0.0	1.84	51.6	19.4	0.0	0.33	0.28	0.26	0.55	3d8/12 L=60	51,2,2	
	s=1,m=6	60.0	2.13	59.7	15.4	0.0	0.42	0.43	0.25	0.54	3d8/12 L=60	2,2,2	
87	NV,ok	0.0	2.27	63.7	19.4	0.0	0.42	0.27	0.23	0.49	3d8/12 L=60	49,2,2	
	s=1,m=6	60.0	2.49	69.7	15.4	0.0	0.52	0.44	0.22	0.47	3d8/12 L=60	2,2,2	
88	NV,ok	0.0	2.63	73.7	17.4	0.0	0.54	0.32	0.19	0.41	3d8/12 L=60	2,2,2	
	s=1,m=6	60.0	2.78	77.7	15.4	0.0	0.59	0.45	0.18	0.39	3d8/12 L=60	2,2,2	
89	NV,ok	0.0	2.92	81.8	15.4	0.0	0.63	0.36	0.14	0.30	3d8/12 L=60	2,2,2	
	s=1,m=6	60.0	2.99	83.8	13.4	0.0	0.65	0.45	0.13	0.28	3d8/12 L=60	2,2,2	
90	NV,ok	0.0	3.06	85.8	15.4	0.0	0.65	0.40	0.08	0.17	3d8/12 L=60	2,2,2	
	s=1,m=6	60.0	3.14	87.8	13.4	0.0	0.66	0.44	0.07	0.16	3d8/12 L=60	2,2,2	
91	NV,ok	0.0	3.21	89.8	13.4	0.0	0.66	0.41	0.02	0.05	3d8/12 L=60	2,2,2	
	s=1,m=6	60.0	3.21	89.8	13.4	0.0	0.66	0.43	0.02	0.03	3d8/12 L=60	2,2,2	
92	NV,ok	0.0	3.21	89.8	13.4	0.0	0.66	0.43	0.03	0.06	3d8/12 L=60	2,20,16	
	s=1,m=6	60.0	3.21	89.8	15.4	0.0	0.66	0.40	0.04	0.07	3d8/12 L=60	2,20,16	
93	NV,ok	0.0	3.06	85.8	13.4	0.0	0.65	0.45	0.07	0.14	3d8/12 L=60	2,2,2	
	s=1,m=6	60.0	2.99	83.8	15.4	0.0	0.64	0.41	0.07	0.16	3d8/12 L=60	2,2,2	
94	NV,ok	0.0	2.99	83.8	13.4	0.0	0.65	0.44	0.09	0.20	3d8/12 L=60	2,2,2	
	s=1,m=6	60.0	2.85	79.8	15.4	0.0	0.61	0.39	0.10	0.22	3d8/12 L=60	2,2,2	
95	NV,ok	0.0	2.78	77.7	15.4	0.0	0.59	0.45	0.12	0.25	3d8/12 L=60	2,2,2	
	s=1,m=6	60.0	2.70	75.7	17.4	0.0	0.56	0.36	0.13	0.27	3d8/12 L=60	2,2,2	
96	NV,ok	0.0	2.56	71.7	15.4	0.0	0.54	0.45	0.14	0.30	3d8/12 L=60	2,2,2	
	s=1,m=6	60.0	2.49	69.7	17.4	0.0	0.50	0.33	0.15	0.32	3d8/12 L=60	2,2,2	
97	NV,ok	0.0	2.35	65.7	15.4	0.0	0.48	0.44	0.16	0.35	3d8/12 L=60	2,2,2	
	s=1,m=6	60.0	2.20	61.7	17.4	0.0	0.42	0.30	0.17	0.36	3d8/12 L=60	2,2,2	
98	ok,ok	0.0	2.06	57.6	15.4	0.0	0.40	0.43	0.18	0.39	3d8/12 L=60	2,2,2	
	s=1,m=6	60.0	1.92	53.6	19.4	0.0	0.34	0.27	0.19	0.41	3d8/12 L=60	50,2,2	
99	ok,ok	0.0	1.77	49.6	15.4	0.0	0.34	0.41	0.20	0.44	3d8/12 L=60	2,2,2	
	s=1,m=6	60.0	1.56	43.6	19.4	0.0	0.28	0.28	0.21	0.45	3d8/12 L=60	50,2,2	
100	ok,ok	0.0	1.41	39.5	17.4	0.0	0.27	0.39	0.22	0.48	3d8/12 L=60	2,2,2	
	s=1,m=6	60.0	1.20	33.5	21.5	0.0	0.23	0.27	0.23	0.50	3d8/12 L=60	52,2,2	

101	ok,ok	0.0	0.98	27.5	21.5	0.0	0.20	0.33	0.24	0.51	3d8/12 L=60	2,2,2	
	s=1,m=6	60.0	0.98	19.4	27.5	0.0	0.21	0.37	0.24	0.52	3d8/12 L=60	2,2,2	
102	ok,ok	0.0	1.27	13.4	35.5	0.0	0.26	0.29	0.29	0.63	3d8/12 L=60	43,2,2	
	s=1,m=6	60.0	1.05	13.4	29.5	0.0	0.23	0.84	0.30	0.64	3d8/12 L=60	2,2,2	
							M_T= 4	**Z=100.0**	**P=4**	**P=104**			
Trave	Note	Pos.	%Af	Af inf.	Af. sup	Af long.	x/d	V N/M	V V/T cls	V V/T acc	Staffe	Rif. cmb	
124	ok,ok	0.0	1.05	13.4	29.5	0.0	0.23	0.81	0.37	0.74	3d8/12 L=60	2,2,2	
	s=1,m=6	60.0	1.20	13.4	33.5	0.0	0.25	0.29	0.36	0.72	3d8/12 L=60	22,2,2	
125	ok,ok	0.0	0.98	23.5	27.5	0.0	0.20	0.35	0.35	0.63	3d8/12 L=60	2,2,2	
	s=1,m=6	60.0	1.20	33.5	17.4	0.0	0.24	0.37	0.34	0.61	3d8/12 L=60	2,2,2	
126	ok,ok	0.0	1.41	39.5	19.4	0.0	0.26	0.30	0.35	0.60	3d8/12 L=60	23,2,2	
	s=1,m=6	60.0	1.70	47.6	15.4	0.0	0.33	0.41	0.34	0.59	3d8/12 L=60	2,2,2	
127	ok,ok	0.0	1.84	51.6	19.4	0.0	0.33	0.28	0.33	0.56	3d8/12 L=60	23,2,2	
	s=1,m=6	60.0	2.13	59.7	15.4	0.0	0.42	0.43	0.33	0.54	3d8/12 L=60	2,2,2	
128	NV,ok	0.0	2.27	63.7	19.4	0.0	0.42	0.27	0.31	0.51	3d8/12 L=60	21,2,2	
	s=1,m=6	60.0	2.49	69.7	15.4	0.0	0.52	0.45	0.30	0.50	3d8/12 L=60	2,2,2	
129	NV,ok	0.0	2.63	73.7	17.4	0.0	0.54	0.32	0.28	0.48	3d8/12 L=60	2,2,2	
	s=1,m=6	60.0	2.85	79.8	15.4	0.0	0.61	0.46	0.27	0.46	3d8/12 L=60	2,2,2	
130	NV,ok	0.0	2.92	81.8	17.4	0.0	0.61	0.37	0.19	0.32	3d8/12 L=60	2,2,2	
	s=1,m=6	60.0	3.06	85.8	13.4	0.0	0.65	0.46	0.18	0.31	3d8/12 L=60	2,2,2	
131	NV,ok	0.0	3.14	87.8	15.4	0.0	0.65	0.40	0.09	0.17	3d8/12 L=60	2,2,2	
	s=1,m=6	60.0	3.21	89.8	13.4	0.0	0.66	0.45	0.09	0.16	3d8/12 L=60	2,2,2	
132	NV,ok	0.0	3.28	91.8	13.4	0.0	0.66	0.42	0.03	0.05	3d8/12 L=60	2,1,1	
	s=1,m=6	60.0	3.28	91.8	13.4	0.0	0.66	0.42	0.02	0.03	3d8/12 L=60	2,1,1	
133	NV,ok	0.0	3.21	89.8	13.4	0.0	0.66	0.45	0.09	0.13	3d8/12 L=60	2,8,16	
	s=1,m=6	60.0	3.14	87.8	15.4	0.0	0.65	0.41	0.10	0.15	3d8/12 L=60	2,8,16	
134	NV,ok	0.0	3.06	85.8	13.4	0.0	0.65	0.45	0.12	0.17	3d8/12 L=60	2,2,2	
	s=1,m=6	60.0	2.99	83.8	15.4	0.0	0.64	0.41	0.13	0.18	3d8/12 L=60	2,2,2	
135	NV,ok	0.0	2.99	83.8	15.4	0.0	0.64	0.44	0.14	0.21	3d8/12 L=60	2,2,2	
	s=1,m=6	60.0	2.92	81.8	15.4	0.0	0.63	0.37	0.15	0.22	3d8/12 L=60	2,2,2	
136	NV,ok	0.0	2.78	77.7	15.4	0.0	0.59	0.45	0.17	0.25	3d8/12 L=60	2,2,2	
	s=1,m=6	60.0	2.70	75.7	17.4	0.0	0.56	0.36	0.18	0.27	3d8/12 L=60	2,2,2	
137	NV,ok	0.0	2.56	71.7	15.4	0.0	0.54	0.45	0.19	0.30	3d8/12 L=60	2,2,2	
	s=1,m=6	60.0	2.42	67.7	17.4	0.0	0.48	0.34	0.20	0.31	3d8/12 L=60	2,2,2	
138	NV,ok	0.0	2.35	65.7	15.4	0.0	0.48	0.44	0.21	0.34	3d8/12 L=60	2,2,2	
	s=1,m=6	60.0	2.20	61.7	17.4	0.0	0.42	0.30	0.22	0.36	3d8/12 L=60	2,2,2	
139	ok,ok	0.0	2.06	57.6	15.4	0.0	0.40	0.43	0.24	0.39	3d8/12 L=60	2,2,2	
	s=1,m=6	60.0	1.92	53.6	19.4	0.0	0.34	0.27	0.24	0.40	3d8/12 L=60	30,2,2	
140	ok,ok	0.0	1.77	49.6	15.4	0.0	0.34	0.41	0.26	0.44	3d8/12 L=60	2,2,2	
	s=1,m=6	60.0	1.56	43.6	19.4	0.0	0.28	0.28	0.27	0.45	3d8/12 L=60	32,2,2	
141	ok,ok	0.0	1.41	39.5	17.4	0.0	0.27	0.39	0.28	0.48	3d8/12 L=60	2,2,2	
	s=1,m=6	60.0	1.20	33.5	21.5	0.0	0.23	0.27	0.28	0.50	3d8/12 L=60	32,2,2	
142	ok,ok	0.0	0.98	27.5	21.5	0.0	0.20	0.34	0.28	0.51	3d8/12 L=60	2,2,2	
	s=1,m=6	60.0	1.05	19.4	29.5	0.0	0.21	0.33	0.28	0.53	3d8/12 L=60	2,2,2	
143	ok,ok	0.0	1.27	13.4	35.5	0.0	0.26	0.29	0.31	0.63	3d8/12 L=60	29,2,2	
	s=1,m=6	60.0	1.05	13.4	29.5	0.0	0.23	0.84	0.32	0.64	3d8/12 L=60	2,2,2	
							M_T= 5	**Z=100.0**	**P=5**	**P=105**			
Trave	Note	Pos.	%Af	Af inf.	Af. sup	Af long.	x/d	V N/M	V V/T cls	V V/T acc	Staffe	Rif. cmb	
165	ok,ok	0.0	1.05	13.4	29.5	0.0	0.23	0.85	0.40	0.78	3d8/12 L=60	2,2,2	
	s=1,m=6	60.0	1.27	13.4	35.5	0.0	0.26	0.30	0.39	0.77	3d8/12 L=60	22,2,2	
166	ok,ok	0.0	0.98	25.5	27.5	0.0	0.20	0.35	0.40	0.64	3d8/12 L=60	2,2,2	
	s=1,m=6	60.0	1.20	33.5	17.4	0.0	0.24	0.40	0.39	0.63	3d8/12 L=60	2,2,2	
167	ok,ok	0.0	1.41	39.5	19.4	0.0	0.26	0.30	0.39	0.61	3d8/12 L=60	31,2,2	
	s=1,m=6	60.0	1.70	47.6	15.4	0.0	0.33	0.43	0.39	0.59	3d8/12 L=60	2,2,2	
168	ok,ok	0.0	1.92	53.6	19.4	0.0	0.34	0.28	0.37	0.57	3d8/12 L=60	39,2,2	
	s=1,m=6	60.0	2.13	59.7	15.4	0.0	0.42	0.45	0.36	0.56	3d8/12 L=60	2,2,2	
169	NV,ok	0.0	2.35	65.7	19.4	0.0	0.44	0.27	0.34	0.53	3d8/12 L=60	21,2,2	
	s=1,m=6	60.0	2.56	71.7	15.4	0.0	0.54	0.45	0.33	0.52	3d8/12 L=60	2,2,2	
170	NV,ok	0.0	2.70	75.7	19.4	0.0	0.54	0.31	0.31	0.50	3d8/12 L=60	2,2,2	
	s=1,m=6	60.0	2.92	81.8	15.4	0.0	0.63	0.46	0.30	0.48	3d8/12 L=60	2,2,2	
171	NV,ok	0.0	3.06	85.8	17.4	0.0	0.64	0.36	0.21	0.34	3d8/12 L=60	2,2,2	
	s=1,m=6	60.0	3.21	89.8	15.4	0.0	0.66	0.45	0.20	0.32	3d8/12 L=60	2,2,2	
172	NV,ok	0.0	3.21	89.8	15.4	0.0	0.66	0.41	0.11	0.17	3d8/12 L=60	2,2,2	
	s=1,m=6	60.0	3.28	91.8	13.4	0.0	0.66	0.45	0.10	0.16	3d8/12 L=60	2,2,2	
173	NV,ok	0.0	3.42	95.8	15.4	0.0	0.67	0.41	0.03	0.05	3d8/12 L=60	2,1,1	
	s=1,m=6	60.0	3.42	95.8	15.4	0.0	0.67	0.41	0.02	0.03	3d8/12 L=60	2,1,1	
174	NV,ok	0.0	3.28	91.8	15.4	0.0	0.66	0.45	0.10	0.16	3d8/12 L=60	2,8,16	
	s=1,m=6	60.0	3.21	89.8	15.4	0.0	0.66	0.41	0.10	0.17	3d8/12 L=60	2,8,16	
175	NV,ok	0.0	3.21	89.8	15.4	0.0	0.66	0.44	0.13	0.19	3d8/12 L=60	2,2,2	
	s=1,m=6	60.0	3.06	85.8	17.4	0.0	0.64	0.39	0.14	0.21	3d8/12 L=60	2,2,2	
176	NV,ok	0.0	2.99	83.8	15.4	0.0	0.64	0.45	0.16	0.23	3d8/12 L=60	2,2,2	
	s=1,m=6	60.0	2.92	81.8	17.4	0.0	0.61	0.37	0.17	0.24	3d8/12 L=60	2,2,2	
177	NV,ok	0.0	2.85	79.8	15.4	0.0	0.61	0.44	0.19	0.27	3d8/12 L=60	2,2,2	
	s=1,m=6	60.0	2.70	75.7	17.4	0.0	0.56	0.36	0.20	0.28	3d8/12 L=60	2,2,2	
178	NV,ok	0.0	2.63	73.7	15.4	0.0	0.56	0.43	0.22	0.31	3d8/12 L=60	2,2,2	
	s=1,m=6	60.0	2.49	69.7	17.4	0.0	0.50	0.33	0.22	0.32	3d8/12 L=60	2,2,2	

179	NV,ok	0.0	2.35	65.7	15.4	0.0	0.48	0.44	0.24	0.35	3d8/12 L=60	2,2,2	
	s=1,m=6	60.0	2.20	61.7	17.4	0.0	0.42	0.30	0.25	0.37	3d8/12 L=60	2,2,2	
180	ok,ok	0.0	2.06	57.6	15.4	0.0	0.40	0.44	0.27	0.39	3d8/12 L=60	2,2,2	
	s=1,m=6	60.0	1.92	53.6	19.4	0.0	0.34	0.27	0.28	0.41	3d8/12 L=60	30,2,2	
181	ok,ok	0.0	1.77	49.6	15.4	0.0	0.34	0.42	0.30	0.44	3d8/12 L=60	2,2,2	
	s=1,m=6	60.0	1.56	43.6	19.4	0.0	0.28	0.28	0.31	0.45	3d8/12 L=60	44,2,2	
182	ok,ok	0.0	1.41	39.5	15.4	0.0	0.28	0.41	0.32	0.48	3d8/12 L=60	2,2,2	
	s=1,m=6	60.0	1.20	33.5	21.5	0.0	0.23	0.27	0.33	0.50	3d8/12 L=60	24,2,2	
183	ok,ok	0.0	0.98	27.5	19.4	0.0	0.21	0.36	0.33	0.52	3d8/12 L=60	2,2,2	
	s=1,m=6	60.0	0.98	19.4	27.5	0.0	0.21	0.37	0.33	0.53	3d8/12 L=60	2,2,2	
184	ok,ok	0.0	1.34	13.4	37.5	0.0	0.27	0.30	0.34	0.65	3d8/12 L=60	29,2,2	
	s=1,m=6	60.0	1.05	13.4	29.5	0.0	0.23	0.87	0.34	0.67	3d8/12 L=60	2,2,2	
Trave			**%Af**	**Af inf.**	**Af. sup**	**Af long.**	**x/d**	**V N/M**	**V V/T cls**	**V V/T acc**			
			3.42	95.84	37.54	0.0	0.67	0.87	0.40	0.78			

7.2 VERIFICHE SOLETTA C.A. – NTC2018

Per la progettazione come Singolo Elemento di ogni elemento vengono riportati il codice dello stato di verifica con le sigle Ok e NV, il rapporto x/d, la verifica per sollecitazioni ultime (verifica a compressione media gli sforzi membranali, verifica a presso-flessionale e verifica a sollecitazioni taglianti), gli sforzi membranali e flessionali, il quantitativo di armatura nella direzione principale e secondaria sia inferiore che superiore e il quantitativo di armatura a taglio.

Inoltre, vengono riportate per ogni quota significativa l'armatura principale e secondaria, l'armatura in zona confinata (solo per parete sismica) e non confinata, l'armatura concentrata all'estremità (per pareti debolmente armate), lo sforzo assiale aggiuntivo per q superiore a 2 e i valori di inviluppo di taglio e momento. Per le pareti debolmente armate viene riportato anche lo stato di verifica relativo alla snellezza.

Le azioni derivate dall'analisi, in ogni combinazione di calcolo, sono elaborate come previsto al punto 7.4.4.5.1: traslazione del momento, incremento e variazione diagramma taglio, incremento e decremento sforzo assiale

La progettazione nel caso dei gusci viene effettuata una progettazione come Singolo Elemento, riportando in tabella il rapporto x/d, la verifica per sollecitazioni ultime, (verifica a compressione media gli sforzi membranali, verifica a presso-flessionale e verifica a sollecitazioni taglianti) di ogni elemento.

Per ogni elemento, viene riportata inoltre la maglia di armatura necessaria in relazione alle risultanze della progettazione dei nodi dell'elemento stesso. Le quantità di armature necessarie sono armature (disposte rispettivamente in direzione principale e secondaria, inferiore e superiore) distribuite nell'elemento ed espresse in centimetri quadri per sviluppo lineare pari ad un metro.

Nel caso dei gusci viene effettuata, inoltre, la verifica a punzonamento, riportando in tabella il codice dello stato di verifica, il coefficiente di verifica per piastre prive di armature a taglio lungo il perimetro resistente e lungo il perimetro del pilastro, coefficiente di incremento dovuto ai momenti flettenti, fattore di amplificazione per le fondazioni, il fattorei di amplificazione dell'altezza utile per individuare il perimetro di verifica lungo il quale l'armatura a taglio non è richiesta, il quantitativo di armatura a punzonamento, il numero di serie di armature, il numero di braccia di armatura ed il riferimento alla combinazione più gravosa.

Si riportano di seguito le principali verifiche sugli elementi travi e colonne con diagrammi grafici per cui affinchè la verifica sia positiva il rapporto deve essere inferiore o uguale a 1.

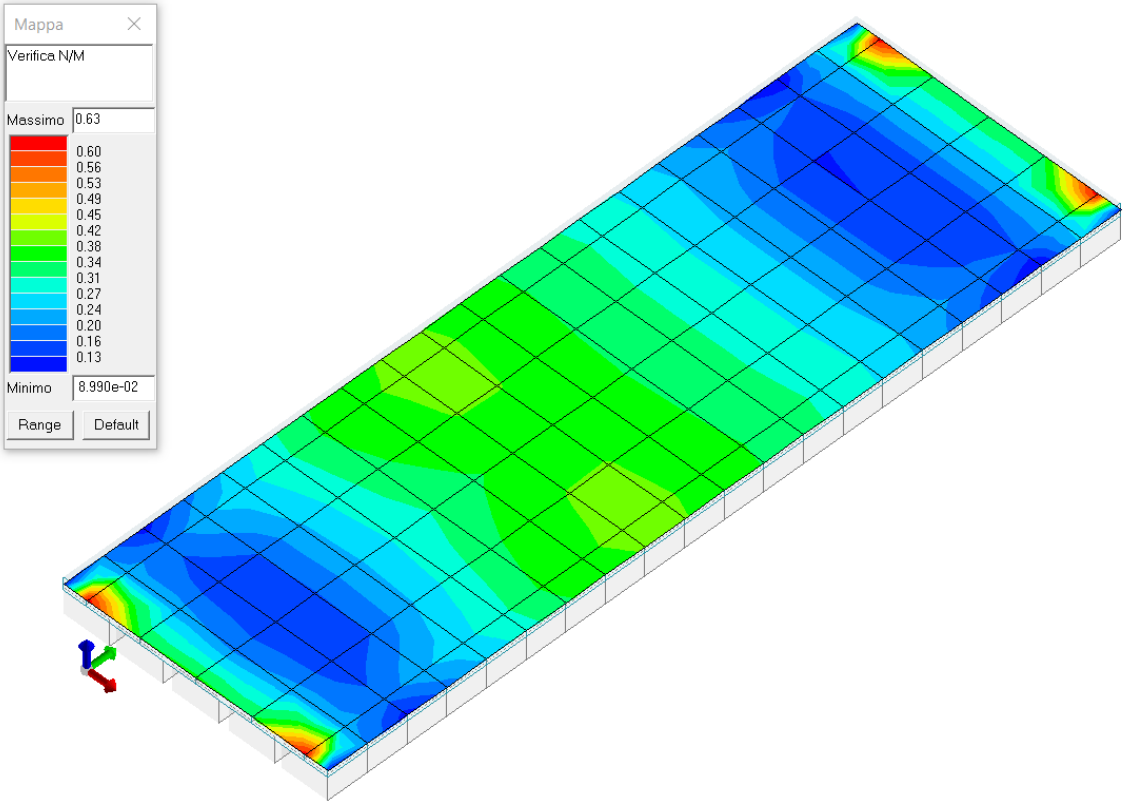

Figura 7-4: SOLETTA C.A. - Verifica N/M

Per gli elementi con progettazione "*Singolo Elemento …*" è presente una tabella con i simboli di seguito descritti:

Macro Guscio	Numero del macroelemento di tipo guscio (elementi non verticali contigui ed analoghi per proprietà)
Macro Setto	Numero del macroelemento di tipo setto (elementi verticali contigui ed analoghi per proprietà)
Spessore	Spessore della parete
Id Materiale	Codice del materiale assegnato all'elemento
Id Criterio	Codice del criterio di progetto assegnato all'elemento
Progettazione	Sigla tipo di Elemento: - Singolo Elemento; - Singolo Elemento FONDAZIONE; - Singolo Elemento NON DISSIPATIVO

Per le verifiche degli elementi con progettazione "*Singolo Elemento …*" e *Progettazione Composta* è presente una tabella con i simboli di seguito descritti:

Nodo	numero del nodo
Stato	codice di verifica dell'elemento **ok** o **NV**
x/d	rapporto tra posizione dell'asse neutro e altezza utile alla rottura della sezione (per sola flessione)
V N/M	Verifica delle sollecitazioni Normali (momento e sforzo normale)
Ver. rid	Rapporto Nd/Nu (Nu ottenuto con riduzione del 25% di fcd)
Af pr+	quantità di armatura richiesta in direzione principale relativa alla faccia positiva (estradosso piastre) (valore derivante da calcolo o minimo normativo)
Af pr-	quantità di armatura richiesta in direzione principale relativa alla faccia negativa (intradosso piastre) (valore derivante da calcolo o minimo normativo)
Af sec+	quantità di armatura richiesta in direzione secondaria relativa alla faccia positiva (estradosso piastre) (valore derivante da calcolo o minimo normativo)
Af sec-	quantità di armatura richiesta in direzione secondaria relativa alla faccia negativa

			(intradosso piastre) (valore derivante da calcolo o minimo normativo)
Nz	No	Nzo	Sforzi membranali per pareti e\o setti verticali
Mz	Mo	Mzo	Sforzi flessionali per pareti e\o setti verticali
Nx	Ny	Nxy	Sforzi membranali per gusci orizzontali
Mx	Mx	Mxy	Sforzi flessionali per gusci orizzontali

Nodo	numero del nodo
Stato	codice di verifica dell'elemento **ok** o **NV**
Max tau	Tensione tangenziale Massima
Ver V pr	Verifica a taglio nella direzione principale lato calcestruzzo
Ver V sec	Verifica a taglio nella direzione secondaria lato calcestruzzo
Af V pr	Armatura nella direzione principale
V pr-	Verifica dell'armatura nella direzione principale
Af V sec	Armatura nella direzione secondaria
V sec-	Verifica dell'armatura nella direzione secondaria

Macro Guscio	Spessore	Id Materiale	Id Criterio	Progettazione
	cm			
1	20.00	6	1	Singolo elemento

Nodo	Stato	x/d	V N/M	ver. rid	Af pr-	Af pr+	Af sec-	Af sec+	N x	N y	N xy	M x	M y	M xy
									daN/cm	daN/cm	daN/cm	daN	daN	daN
43	ok	0.31	0.9	0.2	32.7	39.1	42.9	59.1	342.1	994.1	-1635.3	1419.9	1046.3	-706.8
44	ok	0.25	0.4	0.2	25.2	35.0	25.2	35.0	222.1	864.8	-1576.1	396.0	828.7	-867.8
45	ok	0.20	0.3	0.2	20.1	20.7	20.1	20.7	-9.4	664.4	-33.2	951.9	1252.6	226.4
46	ok	0.20	0.3	4.11e-02	20.1	21.1	20.1	21.1	108.0	841.7	552.1	323.4	964.3	588.0
47	ok	0.20	0.3	4.46e-02	21.8	20.1	21.8	20.1	22.5	1026.5	-327.6	-94.3	-1361.6	714.2
48	ok	0.19	0.2	1.92e-02	20.1	20.1	20.1	20.1	53.6	689.0	-272.3	159.8	-718.7	321.5
49	ok	0.21	0.4	0.1	23.3	20.1	23.7	20.1	57.2	945.5	358.8	-11.0	-1976.4	-920.8
50	ok	0.19	0.2	4.80e-02	20.1	20.1	20.1	20.1	55.4	473.2	294.0	229.0	-1132.6	-486.6
51	ok	0.19	0.3	0.3	20.1	20.1	20.1	20.1	78.2	-532.9	-100.9	66.4	-4136.8	201.1
52	ok	0.19	0.3	0.2	20.1	20.1	20.1	20.1	8.2	-859.4	-97.0	23.9	-3725.5	209.4
53	ok	0.19	0.4	0.3	20.1	20.1	20.1	20.1	36.3	-1213.6	-94.7	-597.4	-5088.1	-11.9
54	ok	0.19	0.4	0.3	20.1	20.1	20.1	20.1	2.0	-1254.7	-98.3	-778.8	-4966.0	140.3
55	ok	0.19	0.3	9.75e-02	20.1	20.1	20.1	20.1	97.1	720.4	-193.3	44.2	-2149.8	513.0
56	ok	0.19	0.2	5.52e-02	20.1	20.1	20.1	20.1	27.4	318.6	-185.9	141.9	-1502.3	221.2
57	ok	0.19	0.4	0.3	20.1	20.1	20.1	20.1	121.6	-242.4	174.2	48.5	-4405.0	-232.6
58	ok	0.19	0.3	0.2	20.1	20.1	20.1	20.1	20.8	-626.6	-254.4	-303.8	-3753.1	-63.7
59	ok	0.19	0.4	0.3	20.1	20.1	20.1	20.1	16.3	-1417.6	18.5	-555.1	-5200.2	-15.5
60	ok	0.19	0.4	0.3	20.1	20.1	20.1	20.1	-5.1	-1431.6	12.6	-679.0	-5133.1	7.8
61	ok	0.19	0.3	0.3	20.1	20.1	20.1	20.1	68.2	-776.5	-83.9	89.9	-4467.5	130.4
62	ok	0.19	0.3	0.3	20.1	20.1	20.1	20.1	6.4	-1070.6	-77.9	36.9	-4098.1	215.3
63	ok	0.19	0.3	0.1	20.1	20.1	20.1	20.1	103.0	374.9	-156.0	32.9	-2766.2	399.4
64	ok	0.19	0.2	9.30e-02	20.1	20.1	20.1	20.1	13.6	-27.7	-153.2	94.0	-2168.9	200.7
65	ok	0.25	0.4	0.2	22.3	32.8	22.3	32.8	215.7	756.8	1402.2	663.2	899.5	939.8
66	ok	0.30	0.9	0.2	30.7	36.5	36.1	52.1	296.5	847.3	1463.2	2063.6	1190.6	603.2
67	ok	0.19	0.3	0.2	20.1	20.1	20.1	20.1	-24.3	435.8	-47.4	1291.0	1130.6	-298.9
68	ok	0.19	0.3	4.99e-02	20.1	20.1	20.1	20.1	84.5	506.9	-15.0	738.3	1030.1	-16.4
69	ok	0.19	0.4	0.3	20.1	20.1	20.1	20.1	51.2	-904.6	-193.5	-576.3	-4695.4	-39.2
70	ok	0.19	0.3	0.3	20.1	20.1	20.1	20.1	13.7	-968.2	-187.7	-648.7	-4587.5	10.7
71	ok	0.19	0.3	0.2	20.1	20.1	20.1	20.1	96.7	44.7	-136.0	33.2	-3290.7	323.7
72	ok	0.19	0.2	0.1	20.1	20.1	20.1	20.1	9.1	-338.9	-133.4	52.4	-2760.1	196.9
73	ok	0.19	0.4	0.3	20.1	20.1	20.1	20.1	30.0	-1113.9	117.7	-329.0	-4568.6	17.2
74	ok	0.19	0.3	0.3	20.1	20.1	20.1	20.1	12.1	-1182.5	109.7	-177.1	-4486.9	81.4
75	ok	0.19	0.4	0.3	20.1	20.1	20.1	20.1	17.5	-1423.1	-2.8	-537.9	-5199.4	33.0
76	ok	0.19	0.4	0.3	20.1	20.1	20.1	20.1	-10.6	-1439.7	-11.0	-737.4	-5092.7	242.6
77	ok	0.19	0.4	0.2	20.1	20.1	20.1	20.1	124.7	571.2	233.5	99.8	-2909.1	-619.3
78	ok	0.19	0.2	0.1	20.1	20.1	20.1	20.1	27.7	34.2	210.5	265.2	-2047.8	-371.2
79	ok	0.19	0.3	0.2	20.1	20.1	20.1	20.1	87.7	-259.0	-118.3	46.0	-3745.6	262.2
80	ok	0.19	0.3	0.2	20.1	20.1	20.1	20.1	8.5	-615.7	-115.5	27.9	-3279.3	201.3

Nodo	Stato	x/d	V N/M	ver. rid	Af pr-	Af pr+	Af sec-	Af sec+	N x	N y	N xy	M x	M y	M xy
81	ok	0.19	0.4	0.2	20.1	20.1	20.1	20.1	129.2	160.6	199.3	68.5	-3689.8	-411.2
82	ok	0.19	0.2	0.2	20.1	20.1	20.1	20.1	11.3	-380.2	179.8	237.6	-2850.8	-329.5
83	ok	0.19	0.4	0.3	20.1	20.1	20.1	20.1	25.6	-1275.0	87.6	-448.5	-4876.0	-16.0
84	ok	0.19	0.4	0.3	20.1	20.1	20.1	20.1	5.2	-1318.8	76.5	-378.3	-4796.6	61.8
106	ok	0.25	0.3	0.2	24.7	33.5	24.7	33.5	165.6	836.2	1555.8	83.0	728.0	889.9
107	ok	0.19	0.3	3.42e-02	20.1	20.6	20.1	20.6	148.7	866.6	-566.7	296.0	967.6	-416.2
108	ok	0.19	0.2	1.25e-02	20.1	20.1	20.1	20.1	90.4	694.5	295.5	88.1	-715.2	-96.0
109	ok	0.19	0.2	3.46e-02	20.1	20.1	20.1	20.1	97.1	497.5	-330.9	214.8	-1136.5	70.1
110	ok	0.19	0.3	0.2	20.1	20.1	20.1	20.1	14.1	-828.5	127.5	84.6	-3758.6	-58.6
111	ok	0.19	0.3	0.3	20.1	20.1	20.1	20.1	-29.7	-1273.7	-71.2	1353.5	-4356.6	223.7
112	ok	0.19	0.2	4.36e-02	20.1	20.1	20.1	20.1	41.1	366.5	229.5	68.0	-1509.9	-67.4
113	ok	0.19	0.3	0.2	20.1	20.1	20.1	20.1	1.6	-718.4	-187.5	806.2	-3463.2	222.8
114	ok	0.19	0.4	0.3	20.1	20.1	20.1	20.1	-29.8	-1485.2	15.8	1119.0	-4521.2	187.9
115	ok	0.19	0.3	0.3	20.1	20.1	20.1	20.1	12.6	-1051.2	-102.1	178.1	-4124.4	80.6
116	ok	0.19	0.2	8.01e-02	20.1	20.1	20.1	20.1	19.1	25.4	196.5	55.3	-2183.0	-64.0
117	ok	0.24	0.4	0.2	21.8	30.9	21.8	30.9	179.8	738.8	1386.4	-61.9	728.6	1010.2
118	ok	0.19	0.2	4.21e-02	20.1	20.1	20.1	20.1	158.9	754.5	585.3	323.5	622.5	446.8
119	ok	0.19	0.3	0.3	20.1	20.1	20.1	20.1	-17.6	-1040.6	-133.8	1176.6	-3962.9	254.2
120	ok	0.19	0.2	0.1	20.1	20.1	20.1	20.1	13.1	-291.0	172.4	41.0	-2783.1	-58.8
121	ok	0.19	0.3	0.3	20.1	20.1	20.1	20.1	6.5	-1242.3	-73.4	375.1	-4389.0	112.3
122	ok	0.19	0.4	0.3	20.1	20.1	20.1	20.1	-31.8	-1413.7	-13.3	1312.6	-4563.9	170.3
123	ok	0.19	0.2	8.91e-02	20.1	20.1	20.1	20.1	47.4	91.2	-265.1	325.0	-2053.8	101.7
124	ok	0.19	0.3	0.2	20.1	20.1	20.1	20.1	13.2	-575.8	150.3	44.7	-3308.9	-56.0
125	ok	0.19	0.2	0.1	20.1	20.1	20.1	20.1	20.7	-328.9	-226.0	515.6	-2823.2	160.6
126	ok	0.19	0.4	0.3	20.1	20.1	20.1	20.1	-8.2	-1396.7	-37.5	697.6	-4525.3	161.3
148	ok	0.25	0.4	0.2	25.2	35.2	25.2	35.2	224.6	868.1	1578.1	471.0	849.5	857.0
149	ok	0.20	0.3	4.13e-02	20.1	21.0	20.1	21.0	105.6	842.9	-552.4	312.1	959.2	-624.2
150	ok	0.19	0.2	1.97e-02	20.1	20.1	20.1	20.1	53.3	687.3	274.2	160.5	-725.4	-351.1
151	ok	0.19	0.2	4.81e-02	20.1	20.1	20.1	20.1	55.2	473.4	-293.8	231.3	-1132.9	503.2
152	ok	0.19	0.3	0.2	20.1	20.1	20.1	20.1	8.3	-860.0	96.9	18.7	-3730.7	-202.7
153	ok	0.19	0.4	0.3	20.1	20.1	20.1	20.1	2.0	-1254.2	98.9	-787.0	-4968.7	-133.3
154	ok	0.19	0.2	5.58e-02	20.1	20.1	20.1	20.1	27.1	314.9	186.6	140.5	-1517.9	-237.7
155	ok	0.19	0.3	0.2	20.1	20.1	20.1	20.1	20.9	-626.2	255.0	-307.3	-3754.9	72.4
156	ok	0.19	0.4	0.3	20.1	20.1	20.1	20.1	-5.2	-1431.9	-12.0	-689.0	-5135.7	0.5
157	ok	0.19	0.3	0.3	20.1	20.1	20.1	20.1	6.5	-1070.7	78.0	31.9	-4102.1	-207.6
158	ok	0.19	0.2	9.32e-02	20.1	20.1	20.1	20.1	13.5	-31.7	152.3	89.6	-2185.0	-205.6
159	ok	0.25	0.4	0.2	22.3	32.8	22.3	32.8	215.3	757.5	-1402.3	697.6	907.4	-938.7
160	ok	0.19	0.3	5.00e-02	20.1	20.1	20.1	20.1	84.1	507.0	15.5	764.0	1036.1	23.5
161	ok	0.19	0.4	0.3	20.1	20.1	20.1	20.1	13.7	-967.8	188.3	-654.5	-4589.7	-2.9
162	ok	0.19	0.2	0.1	20.1	20.1	20.1	20.1	9.1	-341.7	132.5	47.6	-2769.2	-195.3
163	ok	0.19	0.3	0.3	20.1	20.1	20.1	20.1	11.8	-1183.4	-108.9	-193.4	-4491.1	-74.2
164	ok	0.19	0.4	0.3	20.1	20.1	20.1	20.1	-10.5	-1439.1	11.6	-748.4	-5096.1	-236.5
165	ok	0.19	0.2	0.1	20.1	20.1	20.1	20.1	27.6	34.4	-210.2	269.2	-2048.2	384.3
166	ok	0.19	0.3	0.2	20.1	20.1	20.1	20.1	8.6	-617.1	115.2	22.9	-3286.1	-196.5
167	ok	0.19	0.2	0.2	20.1	20.1	20.1	20.1	11.3	-380.0	-179.4	241.4	-2851.4	340.3
168	ok	0.19	0.4	0.3	20.1	20.1	20.1	20.1	5.0	-1319.4	-75.7	-391.2	-4799.9	-53.9
190	ok	0.31	0.9	0.2	32.8	39.3	43.2	59.2	345.1	1000.0	1640.0	1498.1	1065.4	697.9
191	ok	0.20	0.3	0.2	20.1	20.8	20.1	20.8	-10.7	662.4	31.9	1001.0	1264.7	-244.2
192	ok	0.20	0.3	4.57e-02	21.9	20.1	21.9	20.1	22.3	1026.9	329.2	-77.5	-1379.1	-753.0
193	ok	0.21	0.4	0.1	23.3	20.1	23.8	20.1	57.3	946.2	-358.9	-3.3	-1978.4	942.6
194	ok	0.19	0.3	0.3	20.1	20.1	20.1	20.1	77.7	-537.2	100.3	64.2	-4141.5	-188.0
195	ok	0.19	0.4	0.3	20.1	20.1	20.1	20.1	36.4	-1212.8	95.0	-605.3	-5091.5	17.3
196	ok	0.19	0.4	9.92e-02	20.1	20.1	20.1	20.1	97.6	717.4	193.6	53.3	-2177.0	-528.0
197	ok	0.19	0.4	0.3	20.1	20.1	20.1	20.1	121.6	-241.8	-174.1	51.3	-4406.6	241.0
198	ok	0.19	0.4	0.3	20.1	20.1	20.1	20.1	16.1	-1417.8	-18.0	-564.1	-5203.8	21.4
199	ok	0.19	0.3	0.3	20.1	20.1	20.1	20.1	67.8	-779.3	83.5	87.1	-4470.9	-116.6
200	ok	0.19	0.3	0.1	20.1	20.1	20.1	20.1	103.3	367.8	154.5	37.0	-2788.6	-399.8
201	ok	0.30	0.9	0.2	30.8	36.6	36.2	52.1	296.8	847.9	-1464.4	2122.7	1200.9	-596.5
202	ok	0.19	0.3	0.2	20.1	20.2	20.1	20.2	-24.6	435.6	47.9	1327.2	1137.2	307.8
203	ok	0.19	0.4	0.3	20.1	20.1	20.1	20.1	51.2	-903.9	193.8	-582.0	-4698.2	45.4
204	ok	0.19	0.3	0.2	20.1	20.1	20.1	20.1	96.4	36.8	134.3	36.4	-3300.6	-316.5
205	ok	0.19	0.4	0.3	20.1	20.1	20.1	20.1	29.7	-1115.3	-117.0	-343.3	-4574.4	-13.1
206	ok	0.19	0.4	0.3	20.1	20.1	20.1	20.1	17.5	-1422.2	3.2	-548.2	-5203.6	-28.3
207	ok	0.19	0.4	0.2	20.1	20.1	20.1	20.1	124.7	571.7	-233.4	105.7	-2910.9	635.1
208	ok	0.19	0.3	0.2	20.1	20.1	20.1	20.1	87.2	-265.1	117.3	45.4	-3752.3	-251.2
209	ok	0.19	0.4	0.2	20.1	20.1	20.1	20.1	129.2	161.1	-199.2	72.5	-3691.5	422.7
210	ok	0.19	0.4	0.3	20.1	20.1	20.1	20.1	25.4	-1275.7	-87.1	-460.0	-4880.4	21.1
211	ok	0.19	0.1	0.3	20.1	20.1	20.1	20.1	-151.7	-1011.7	-461.4	-10.1	-259.2	-144.6
212	ok	0.20	0.3	3.29e-02	20.1	20.8	20.1	20.8	212.3	835.3	530.0	-35.6	1575.6	192.1
213	ok	0.19	0.4	0.3	20.1	20.1	20.1	20.1	-8.0	-1448.2	42.5	29.8	-5049.7	-148.4
214	ok	0.19	0.1	4.37e-03	20.1	20.1	20.1	20.1	-9.3	691.5	-15.3	-26.4	-843.3	132.0
215	ok	0.19	0.2	2.43e-02	20.1	20.1	20.1	20.1	9.9	550.3	17.7	-9.9	-1335.2	-170.4
216	ok	0.19	0.2	2.78e-02	20.1	20.1	20.1	20.1	33.7	399.7	10.2	-33.7	-1658.1	82.1

Nodo	Stato	x/d	V N/M	ver. rid	Af pr-	Af pr+	Af sec-	Af sec+	N x	N y	N xy	M x	M y	M xy
217	ok	0.19	0.4	0.3	20.1	20.1	20.1	20.1	6.0	-1425.7	-39.9	1.9	-5086.0	173.5
218	ok	0.19	0.2	8.08e-02	20.1	20.1	20.1	20.1	41.4	88.5	13.8	-39.2	-2305.8	52.1
219	ok	0.19	0.4	0.3	20.1	20.1	20.1	20.1	18.9	-1225.7	-41.9	-6.3	-4971.1	146.2
220	ok	0.19	0.2	0.1	20.1	20.1	20.1	20.1	39.4	-207.7	14.1	-37.2	-2871.9	31.7
221	ok	0.19	0.4	0.3	20.1	20.1	20.1	20.1	31.1	-921.5	-38.2	-13.7	-4596.0	100.7
222	ok	0.19	0.3	0.2	20.1	20.1	20.1	20.1	35.2	-479.8	14.0	-30.6	-3372.5	14.5
223	ok	0.19	0.2	2.97e-02	20.1	20.1	20.1	20.1	180.6	590.0	-485.0	-15.8	1401.1	-161.4
224	ok	0.19	0.3	0.2	20.1	20.1	20.1	20.1	30.4	-724.6	13.8	-21.5	-3811.1	-4.1
225	ok	0.19	0.3	0.2	20.1	20.1	20.1	20.1	42.8	-558.4	-24.5	-48.3	-3862.7	48.0
226	ok	0.19	0.3	0.3	20.1	20.1	20.1	20.1	24.7	-940.7	13.9	-11.2	-4189.9	-27.5
227	ok	0.19	0.3	0.2	20.1	20.1	20.1	20.1	52.2	-184.0	-11.6	-30.2	-3108.8	-20.1
228	ok	0.19	0.3	0.3	20.1	20.1	20.1	20.1	16.3	-1129.6	16.3	-1.3	-4512.5	-59.0
229	ok	0.19	0.2	9.72e-02	20.1	20.1	20.1	20.1	48.8	192.9	-5.9	-21.3	-2298.8	-86.8
230	ok	0.19	0.4	0.3	20.1	20.1	20.1	20.1	4.2	-1299.1	28.8	-9.4	-4792.1	-107.1
231	ok	0.19	0.1	0.2	20.1	20.1	20.1	20.1	-124.8	-845.1	430.5	-63.1	-324.8	116.6
232	ok	0.20	0.3	3.30e-02	20.1	20.8	20.1	20.8	213.1	837.4	-533.3	-40.4	1582.1	-186.2
233	ok	0.19	0.1	0.3	20.1	20.1	20.1	20.1	-152.0	-1022.5	461.4	-9.2	-265.8	123.3
234	ok	0.19	0.1	4.31e-03	20.1	20.1	20.1	20.1	-9.4	689.2	14.9	-21.6	-859.3	-142.2
235	ok	0.19	0.2	2.77e-02	20.1	20.1	20.1	20.1	33.6	393.9	-10.9	-30.0	-1682.5	-86.6
236	ok	0.19	0.2	8.23e-02	20.1	20.1	20.1	20.1	41.4	80.6	-14.3	-36.4	-2328.7	-53.0
237	ok	0.19	0.2	0.1	20.1	20.1	20.1	20.1	39.4	-214.9	-14.2	-36.2	-2886.6	-30.2
238	ok	0.19	0.3	0.2	20.1	20.1	20.1	20.1	35.1	-485.2	-13.9	-30.3	-3383.1	-11.5
239	ok	0.19	0.3	0.2	20.1	20.1	20.1	20.1	30.2	-728.1	-13.7	-21.6	-3818.8	8.0
240	ok	0.19	0.3	0.3	20.1	20.1	20.1	20.1	24.6	-942.9	-13.8	-11.6	-4195.6	31.8
241	ok	0.19	0.3	0.3	20.1	20.1	20.1	20.1	16.2	-1130.7	-16.2	-1.8	-4516.7	63.5
242	ok	0.19	0.4	0.3	20.1	20.1	20.1	20.1	4.1	-1299.5	-28.8	-9.9	-4795.3	111.8
243	ok	0.19	0.4	0.3	20.1	20.1	20.1	20.1	-8.1	-1448.1	-42.5	29.3	-5052.2	153.0
244	ok	0.19	0.4	0.3	20.1	20.1	20.1	20.1	6.1	-1424.8	39.8	2.4	-5088.6	-172.6
245	ok	0.19	0.4	0.3	20.1	20.1	20.1	20.1	18.9	-1224.9	41.8	-5.7	-4973.2	-144.4
246	ok	0.19	0.4	0.3	20.1	20.1	20.1	20.1	31.2	-920.8	38.2	-13.1	-4598.0	-98.2
247	ok	0.19	0.3	0.2	20.1	20.1	20.1	20.1	42.8	-557.8	24.5	-47.5	-3864.6	-44.7
248	ok	0.19	0.3	0.2	20.1	20.1	20.1	20.1	52.2	-183.5	11.6	-29.2	-3110.8	24.4
249	ok	0.19	0.2	9.72e-02	20.1	20.1	20.1	20.1	48.9	193.2	5.9	-19.9	-2300.9	92.3
250	ok	0.19	0.2	2.44e-02	20.1	20.1	20.1	20.1	9.9	550.6	-17.6	-7.9	-1337.0	177.6
251	ok	0.19	0.2	2.98e-02	20.1	20.1	20.1	20.1	180.7	589.9	485.3	-16.8	1402.0	159.8
252	ok	0.19	0.1	0.2	20.1	20.1	20.1	20.1	-124.8	-845.6	-430.9	-63.6	-322.8	-113.3
Nodo		**x/d**	**V N/M**	**ver. rid**	**Af pr-**	**Af pr+**	**Af sec-**	**Af sec+**	**N x**	**N y**	**N xy**	**M x**	**M y**	**M xy**
									-152.03	-1485.20	-1635.28	-786.99	-5203.76	-938.69
		0.31	0.91	0.35	20.01	20.01	20.01	20.01	345.14	1026.93	1639.96	2122.74	1582.09	1010.15

Nodo	Stato	Max tau	Ver V pr	Ver V sec	Af V pr	Af V sec	V pr	V sec
		daN/cm2					daN/cm	daN/cm
43	ok	2.28						
44	ok	1.39						
45	ok	2.28						
46	ok	1.39						
47	ok	1.53						
48	ok	0.86						
49	ok	1.69						
50	ok	0.87						
51	ok	0.50						
52	ok	0.13						
53	ok	0.63						
54	ok	1.15						
55	ok	0.91						
56	ok	0.32						
57	ok	0.91						
58	ok	0.76						
59	ok	0.52						
60	ok	1.04						
61	ok	0.44						
62	ok	0.18						
63	ok	0.75						
64	ok	0.21						
65	ok	1.29						
66	ok	2.48						
67	ok	2.48						
68	ok	1.29						

Nodo	Stato	Max tau	Ver V pr	Ver V sec	Af V pr	Af V sec	V pr	V sec
69	ok	0.91						
70	ok	1.06						
71	ok	0.66						
72	ok	0.17						
73	ok	0.42						
74	ok	0.37						
75	ok	0.49						
76	ok	1.15						
77	ok	1.03						
78	ok	0.38						
79	ok	0.57						
80	ok	0.15						
81	ok	0.86						
82	ok	0.41						
83	ok	0.52						
84	ok	0.72						
106	ok	1.37						
107	ok	1.37						
108	ok	0.85						
109	ok	0.81						
110	ok	0.09						
111	ok	1.15						
112	ok	0.28						
113	ok	0.76						
114	ok	1.04						
115	ok	0.18						
116	ok	0.17						
117	ok	1.26						
118	ok	1.26						
119	ok	1.06						
120	ok	0.14						
121	ok	0.38						
122	ok	1.15						
123	ok	0.28						
124	ok	0.11						
125	ok	0.41						
126	ok	0.73						
148	ok	1.40						
149	ok	1.40						
150	ok	0.87						
151	ok	0.87						
152	ok	0.13						
153	ok	1.15						
154	ok	0.32						
155	ok	0.76						
156	ok	1.04						
157	ok	0.18						
158	ok	0.20						
159	ok	1.30						
160	ok	1.30						
161	ok	1.06						
162	ok	0.16						
163	ok	0.38						
164	ok	1.15						
165	ok	0.38						
166	ok	0.15						
167	ok	0.41						
168	ok	0.73						
190	ok	2.35						
191	ok	2.35						
192	ok	1.54						
193	ok	1.70						
194	ok	0.50						
195	ok	0.63						
196	ok	0.92						
197	ok	0.91						
198	ok	0.53						
199	ok	0.44						
200	ok	0.75						
201	ok	2.52						
202	ok	2.52						
203	ok	0.91						
204	ok	0.64						

Nodo	Stato	Max tau	Ver V pr	Ver V sec	Af V pr	Af V sec	V pr	V sec
205	ok	0.44						
206	ok	0.50						
207	ok	1.03						
208	ok	0.57						
209	ok	0.86						
210	ok	0.53						
211	ok	2.28						
212	ok	2.28						
213	ok	0.52						
214	ok	1.53						
215	ok	1.69						
216	ok	0.91						
217	ok	0.49						
218	ok	0.75						
219	ok	0.63						
220	ok	0.66						
221	ok	0.91						
222	ok	0.57						
223	ok	2.48						
224	ok	0.50						
225	ok	0.91						
226	ok	0.44						
227	ok	0.86						
228	ok	0.42						
229	ok	1.03						
230	ok	0.52						
231	ok	2.48						
232	ok	2.35						
233	ok	2.35						
234	ok	1.54						
235	ok	0.92						
236	ok	0.75						
237	ok	0.64						
238	ok	0.57						
239	ok	0.50						
240	ok	0.44						
241	ok	0.44						
242	ok	0.53						
243	ok	0.53						
244	ok	0.50						
245	ok	0.63						
246	ok	0.91						
247	ok	0.91						
248	ok	0.86						
249	ok	1.03						
250	ok	1.70						
251	ok	2.52						
252	ok	2.52						
Nodo		**Max tau**	**Ver V pr**	**Ver V sec**	**Af V pr**	**Af V sec**	**V pr**	**V sec**
		2.52						

8 VERIFICHE STATI LIMITE ESERCIZIO

LEGENDA TABELLA STATI LIMITE D' ESERCIZIO

In tabella vengono riportati i valori di interesse per il controllo degli stati limite d'esercizio.

In particolare, vengono riportati, in relazione al tipo di elemento strutturale, i risultati relativi alle tre categorie di combinazione considerate:

- Combinazioni rare
- Combinazioni frequenti
- Combinazioni quasi permanenti.

I valori di interesse sono i seguenti:

rRfck	rapporto tra la massima compressione nel calcestruzzo e la tensione fck in combinazioni rare	[*normalizzato a 1*]
rRfyk	rapporto tra la massima tensione nell'acciaio e la tensione fyk in combinazioni rare	[*normalizzato a 1*]
rPfck	rapporto tra la massima compressione nel calcestruzzo e la tensione fck in combinazioni quasi permanenti	[*normalizzato a 1*]
wR	apertura caratteristica delle fessure in combinazioni rare	[*mm*]
wF	apertura caratteristica delle fessure in combinazioni frequenti	[*mm*]
wP	apertura caratteristica delle fessure in combinazioni quasi permanenti	[*mm*]
dR	massima deformazione in combinazioni rare	
dF	massima deformazione in combinazioni frequenti	
dP	massima deformazione in combinazioni quasi permanenti	

Per ognuno dei nove valori soprariportati viene indicata (Rif.cmb) la combinazione in cui si è verificato.

In relazione al tipo di elemento strutturale i valori sono selezionati nel modo seguente:

pilastri	**rRfck**	**rRfyk**	**rPfck**	per sezioni significative
travi	**rRfck**	**rRfyk**	**rPfck**	per sezioni significative
	wR	**wF**	**wP**	per sezioni significative
	dR	**dF**	**dP**	massimi in campata
setti e gusci	**rRfck**	**rRfyk**	**rPfck**	massimi nei nodi dell'elemento
	wR	**wF**	**wP**	massimi nei nodi dell'elemento

Si precisa che i valori di massima deformazione per travi sono riferiti al piano verticale (piano locale 1-2 con momenti flettenti 3-3).

Trave	Pos.	rRfck	rRfyk	rPfck	Rif. cmb	wR	wF	wP	Rif. cmb	dR	dF	dP	Rif. cmb
	cm					mm	mm	mm		cm	cm	cm	
1	0.0	0.14	0.74	0.08	87,87,102	0.26	0.27	0.10	87,97,102	-0.86	-1.00	-0.22	87,97,102
	60.0	0.0	0.75	0.0	0,87,0	0.36	0.37	0.0	87,97,0				
2	0.0	0.0	0.58	0.0	0,87,0	0.22	0.25	0.09	87,97,102	-1.39	-1.56	-0.24	87,97,102
	60.0	0.0	0.54	0.0	0,87,0	0.21	0.23	0.08	87,97,102				
3	0.0	0.0	0.76	0.0	0,87,0	0.34	0.38	0.0	87,97,0	-1.14	-1.35	-0.24	87,97,102
	60.0	0.0	0.53	0.0	0,87,0	0.19	0.20	0.07	87,97,102				
4	0.0	0.0	0.73	0.0	0,87,0	0.32	0.36	0.13	87,97,102	-0.69	-0.80	-0.18	87,97,102
	60.0	0.0	0.53	0.0	0,87,0	0.19	0.19	0.07	87,97,102				
5	0.0	0.0	0.72	0.0	0,87,0	0.32	0.36	0.12	87,97,102	-0.46	-0.53	-0.10	87,97,102
	60.0	0.0	0.52	0.0	0,87,0	0.18	0.18	0.06	87,97,102				
6	0.0	0.0	0.70	0.0	0,87,0	0.31	0.35	0.12	87,97,102	-0.29	-0.33	-0.09	87,97,102
	60.0	0.0	0.52	0.0	0,87,0	0.18	0.18	0.12	87,97,102				
7	0.0	0.0	0.70	0.0	0,87,0	0.32	0.36	0.13	87,97,102	-0.17	-0.23	-0.07	87,97,102
	60.0	0.0	0.51	0.0	0,87,0	0.18	0.18	0.12	87,97,102				
8	0.0	0.0	0.71	0.0	0,87,0	0.36	0.39	0.15	87,97,102	-0.12	-0.16	-0.05	87,97,102
	60.0	0.0	0.63	0.0	0,87,0	0.37	0.36	0.15	87,97,102				
9	0.0	0.0	0.64	0.0	0,87,0	0.33	0.34	0.15	87,97,102	-0.06	-0.08	-0.03	87,97,102
	60.0	0.0	0.63	0.0	0,87,0	0.33	0.33	0.13	87,97,102				
10	0.0	0.0	0.57	0.0	0,87,0	0.32	0.31	0.15	87,97,102	-0.01	-0.01	-0.01	86,96,102
	60.0	0.0	0.72	0.0	0,87,0	0.36	0.39	0.14	87,97,102				
11	0.0	0.0	0.56	0.0	0,87,0	0.31	0.30	0.14	87,97,102	0.05	0.06	0.01	87,97,102
	60.0	0.0	0.66	0.0	0,87,0	0.32	0.35	0.13	87,97,102				
12	0.0	0.0	0.55	0.0	0,87,0	0.31	0.30	0.14	87,97,102	0.11	0.14	0.03	87,97,102
	60.0	0.0	0.68	0.0	0,87,0	0.32	0.36	0.13	87,97,102				
13	0.0	0.0	0.53	0.0	0,87,0	0.31	0.30	0.14	87,97,102	0.17	0.21	0.05	87,97,102
	60.0	0.0	0.70	0.0	0,87,0	0.33	0.37	0.14	87,97,102				
14	0.0	0.0	0.52	0.0	0,87,0	0.19	0.19	0.08	87,97,102	0.27	0.33	0.08	87,97,102
	60.0	0.0	0.72	0.0	0,87,0	0.33	0.38	0.14	87,97,102				
15	0.0	0.0	0.53	0.0	0,87,0	0.20	0.20	0.08	87,97,102	0.37	0.47	0.12	87,97,102
	60.0	0.0	0.74	0.0	0,87,0	0.34	0.39	0.15	87,97,102				
16	0.0	0.0	0.54	0.0	0,87,0	0.20	0.21	0.08	87,97,102	0.57	0.66	0.18	87,97,102
	60.0	0.0	0.68	0.0	0,87,0	0.30	0.35	0.13	87,97,102				
17	0.0	0.0	0.53	0.0	0,87,0	0.20	0.21	0.08	87,97,102	0.78	0.92	0.27	87,97,102
	60.0	0.0	0.71	0.0	0,87,0	0.31	0.36	0.14	87,97,102				
18	0.0	0.0	0.54	0.0	0,87,0	0.21	0.23	0.09	87,97,102	1.53	1.74	0.36	87,97,102
	60.0	0.0	0.67	0.0	0,87,0	0.30	0.34	0.0	87,97,0				
19	0.0	0.0	0.57	0.0	0,87,0	0.23	0.26	0.10	87,97,102	2.68	3.58	0.39	87,97,102
	60.0	0.0	0.57	0.0	0,87,0	0.23	0.26	0.0	87,97,0				
20	0.0	0.0	0.63	0.0	0,87,0	0.33	0.32	0.0	87,97,0	0.73	0.84	0.23	87,97,102
	60.0	0.13	0.75	0.08	87,87,102	0.27	0.28	0.10	87,97,102				
21	0.0	0.13	0.72	0.08	87,87,102	0.25	0.26	0.10	87,97,102	-0.85	-1.00	-0.23	87,97,102
	60.0	0.0	0.71	0.0	0,87,0	0.35	0.35	0.0	87,97,0				
22	0.0	0.0	0.57	0.0	0,87,0	0.22	0.25	0.0	87,97,0	-1.69	-1.95	-0.25	87,97,102
	60.0	0.0	0.52	0.0	0,87,0	0.20	0.22	0.08	87,97,102				
23	0.0	0.0	0.75	0.0	0,87,0	0.33	0.37	0.0	87,97,0	-1.16	-1.38	-0.21	87,97,102
	60.0	0.0	0.51	0.0	0,87,0	0.19	0.20	0.07	87,97,102				
24	0.0	0.0	0.72	0.0	0,87,0	0.32	0.36	0.13	87,97,102	-0.68	-0.79	-0.18	87,97,102
	60.0	0.0	0.51	0.0	0,87,0	0.18	0.19	0.07	87,97,102				
25	0.0	0.0	0.69	0.0	0,87,0	0.30	0.35	0.13	87,97,102	-0.42	-0.48	-0.12	87,97,102
	60.0	0.0	0.52	0.0	0,87,0	0.18	0.19	0.07	87,97,102				
26	0.0	0.0	0.75	0.0	0,87,0	0.34	0.39	0.14	87,97,102	-0.29	-0.36	-0.09	87,97,102
	60.0	0.0	0.52	0.0	0,87,0	0.18	0.18	0.12	87,97,102				
27	0.0	0.0	0.67	0.0	0,87,0	0.32	0.35	0.13	87,97,102	-0.16	-0.20	-0.07	87,97,102
	60.0	0.0	0.52	0.0	0,87,0	0.34	0.32	0.15	87,97,102				
28	0.0	0.0	0.69	0.0	0,87,0	0.35	0.37	0.15	87,97,102	-0.12	-0.15	-0.05	87,97,102
	60.0	0.0	0.60	0.0	0,87,0	0.36	0.35	0.15	87,97,102				
29	0.0	0.0	0.71	0.0	0,87,0	0.39	0.40	0.18	87,97,102	-0.07	-0.09	-0.03	87,97,102
	60.0	0.0	0.69	0.0	0,87,0	0.39	0.38	0.16	87,97,102				
30	0.0	0.0	0.64	0.0	0,87,0	0.37	0.36	0.17	87,97,102	-7.60e-03	-0.01	-0.01	87,97,102
	60.0	0.0	0.68	0.0	0,87,0	0.35	0.37	0.14	87,97,102				
31	0.0	0.0	0.63	0.0	0,87,0	0.37	0.36	0.17	87,97,102	0.05	0.06	0.01	87,97,102
	60.0	0.0	0.71	0.0	0,87,0	0.36	0.39	0.15	87,97,102				
32	0.0	0.0	0.53	0.0	0,87,0	0.31	0.30	0.14	87,97,102	0.11	0.14	0.03	87,97,102
	60.0	0.0	0.74	0.0	0,87,0	0.37	0.40	0.15	87,97,102				
33	0.0	0.0	0.53	0.0	0,87,0	0.19	0.20	0.14	87,97,102	0.17	0.21	0.05	87,97,102
	60.0	0.0	0.68	0.0	0,87,0	0.32	0.36	0.14	87,97,102				
34	0.0	0.0	0.53	0.0	0,87,0	0.19	0.20	0.08	87,97,102	0.27	0.32	0.08	87,97,102
	60.0	0.0	0.71	0.0	0,87,0	0.33	0.37	0.14	87,97,102				
35	0.0	0.0	0.53	0.0	0,87,0	0.19	0.20	0.08	87,97,102	0.36	0.46	0.12	87,97,102
	60.0	0.0	0.73	0.0	0,87,0	0.34	0.39	0.15	87,97,102				

Trave	Pos.	rRfck	rRfyk	rPfck	Rif. cmb	wR	wF	wP	Rif. cmb	dR	dF	dP	Rif. cmb
36	0.0	0.0	0.53	0.0	0,87,0	0.20	0.21	0.08	87,97,102	0.52	0.66	0.18	87,97,102
	60.0	0.0	0.68	0.0	0,87,0	0.30	0.35	0.13	87,97,102				
37	0.0	0.0	0.53	0.0	0,87,0	0.20	0.21	0.08	87,97,102	0.84	0.94	0.27	87,97,102
	60.0	0.0	0.71	0.0	0,87,0	0.32	0.36	0.14	87,97,102				
38	0.0	0.0	0.54	0.0	0,87,0	0.21	0.22	0.08	87,97,102	1.55	1.68	0.37	87,97,102
	60.0	0.0	0.68	0.0	0,87,0	0.30	0.34	0.0	87,97,0				
39	0.0	0.0	0.56	0.0	0,87,0	0.22	0.25	0.10	87,97,102	2.44	3.05	0.40	87,97,102
	60.0	0.0	0.53	0.0	0,87,0	0.21	0.23	0.0	87,97,0				
40	0.0	0.0	0.62	0.0	0,87,0	0.33	0.32	0.0	87,97,0	0.71	0.82	0.22	87,97,102
	60.0	0.12	0.73	0.08	87,87,102	0.26	0.27	0.10	87,97,102				
83	0.0	0.13	0.72	0.07	87,87,102	0.25	0.26	0.10	87,97,102	-0.85	-1.00	-0.23	87,97,102
	60.0	0.0	0.72	0.0	0,87,0	0.35	0.36	0.0	87,97,0				
84	0.0	0.0	0.57	0.0	0,87,0	0.22	0.25	0.0	87,97,0	-1.63	-1.88	-0.24	87,97,102
	60.0	0.0	0.53	0.0	0,87,0	0.20	0.22	0.08	87,97,102				
85	0.0	0.0	0.75	0.0	0,87,0	0.33	0.37	0.0	87,97,0	-1.14	-1.36	-0.21	87,97,102
	60.0	0.0	0.52	0.0	0,87,0	0.19	0.20	0.07	87,97,102				
86	0.0	0.0	0.71	0.0	0,87,0	0.31	0.36	0.13	87,97,102	-0.67	-0.78	-0.18	87,97,102
	60.0	0.0	0.51	0.0	0,87,0	0.18	0.19	0.07	87,97,102				
87	0.0	0.0	0.68	0.0	0,87,0	0.30	0.34	0.13	87,97,102	-0.40	-0.46	-0.12	87,97,102
	60.0	0.0	0.52	0.0	0,87,0	0.18	0.19	0.07	87,97,102				
88	0.0	0.0	0.71	0.0	0,87,0	0.33	0.37	0.14	87,97,102	-0.28	-0.33	-0.09	87,97,102
	60.0	0.0	0.52	0.0	0,87,0	0.18	0.18	0.12	87,97,102				
89	0.0	0.0	0.74	0.0	0,87,0	0.36	0.40	0.16	87,97,102	-0.18	-0.23	-0.07	87,97,102
	60.0	0.0	0.52	0.0	0,87,0	0.34	0.32	0.15	87,97,102				
90	0.0	0.0	0.67	0.0	0,87,0	0.35	0.36	0.15	87,97,102	-0.12	-0.15	-0.05	87,97,102
	60.0	0.0	0.59	0.0	0,87,0	0.36	0.34	0.15	87,97,102				
91	0.0	0.0	0.71	0.0	0,87,0	0.39	0.40	0.18	87,97,102	-0.07	-0.09	-0.03	87,97,102
	60.0	0.0	0.66	0.0	0,87,0	0.38	0.36	0.16	87,97,102				
92	0.0	0.0	0.66	0.0	0,87,0	0.38	0.37	0.17	87,97,102	-9.99e-03	-0.01	-0.01	87,97,102
	60.0	0.0	0.63	0.0	0,87,0	0.33	0.34	0.14	87,97,102				
93	0.0	0.0	0.63	0.0	0,87,0	0.37	0.36	0.17	87,97,102	0.05	0.06	0.01	87,97,102
	60.0	0.0	0.69	0.0	0,87,0	0.35	0.37	0.15	87,97,102				
94	0.0	0.0	0.61	0.0	0,87,0	0.36	0.35	0.17	87,97,102	0.11	0.14	0.03	87,97,102
	60.0	0.0	0.73	0.0	0,87,0	0.37	0.40	0.15	87,97,102				
95	0.0	0.0	0.53	0.0	0,87,0	0.19	0.20	0.14	87,97,102	0.17	0.21	0.05	87,97,102
	60.0	0.0	0.68	0.0	0,87,0	0.32	0.36	0.14	87,97,102				
96	0.0	0.0	0.53	0.0	0,87,0	0.19	0.20	0.08	87,97,102	0.27	0.32	0.08	87,97,102
	60.0	0.0	0.71	0.0	0,87,0	0.33	0.37	0.14	87,97,102				
97	0.0	0.0	0.53	0.0	0,87,0	0.20	0.20	0.08	87,97,102	0.37	0.46	0.11	87,97,102
	60.0	0.0	0.74	0.0	0,87,0	0.34	0.39	0.15	87,97,102				
98	0.0	0.0	0.54	0.0	0,87,0	0.20	0.21	0.08	87,97,102	0.47	0.66	0.18	87,97,102
	60.0	0.0	0.69	0.0	0,87,0	0.30	0.35	0.13	87,97,102				
99	0.0	0.0	0.53	0.0	0,87,0	0.20	0.21	0.08	87,97,102	0.84	0.94	0.23	87,97,102
	60.0	0.0	0.72	0.0	0,87,0	0.32	0.36	0.14	87,97,102				
100	0.0	0.0	0.54	0.0	0,87,0	0.21	0.22	0.08	87,97,102	1.55	1.68	0.37	87,97,102
	60.0	0.0	0.68	0.0	0,87,0	0.30	0.34	0.0	87,97,0				
101	0.0	0.0	0.56	0.0	0,87,0	0.22	0.25	0.10	87,97,102	2.90	3.01	0.39	87,97,102
	60.0	0.0	0.57	0.0	0,87,0	0.23	0.26	0.0	87,97,0				
102	0.0	0.0	0.63	0.0	0,87,0	0.33	0.32	0.0	87,97,0	0.71	0.82	0.22	87,97,102
	60.0	0.12	0.73	0.07	87,87,102	0.26	0.27	0.10	87,97,102				
124	0.0	0.13	0.72	0.08	87,87,102	0.25	0.26	0.10	87,97,102	-0.85	-1.00	-0.23	87,97,102
	60.0	0.0	0.71	0.0	0,87,0	0.35	0.35	0.0	87,97,0				
125	0.0	0.0	0.57	0.0	0,87,0	0.22	0.25	0.0	87,97,0	-1.70	-1.95	-0.25	87,97,102
	60.0	0.0	0.52	0.0	0,87,0	0.20	0.22	0.08	87,97,102				
126	0.0	0.0	0.75	0.0	0,87,0	0.33	0.37	0.0	87,97,0	-1.16	-1.38	-0.21	87,97,102
	60.0	0.0	0.52	0.0	0,87,0	0.19	0.20	0.07	87,97,102				
127	0.0	0.0	0.72	0.0	0,87,0	0.32	0.36	0.13	87,97,102	-0.68	-0.79	-0.18	87,97,102
	60.0	0.0	0.52	0.0	0,87,0	0.18	0.19	0.07	87,97,102				
128	0.0	0.0	0.69	0.0	0,87,0	0.30	0.35	0.13	87,97,102	-0.42	-0.48	-0.12	87,97,102
	60.0	0.0	0.52	0.0	0,87,0	0.18	0.19	0.07	87,97,102				
129	0.0	0.0	0.75	0.0	0,87,0	0.34	0.39	0.14	87,97,102	-0.31	-0.36	-0.09	87,97,102
	60.0	0.0	0.52	0.0	0,87,0	0.18	0.18	0.12	87,97,102				
130	0.0	0.0	0.67	0.0	0,87,0	0.32	0.35	0.13	87,97,102	-0.16	-0.20	-0.07	87,97,102
	60.0	0.0	0.52	0.0	0,87,0	0.34	0.32	0.15	87,97,102				
131	0.0	0.0	0.69	0.0	0,87,0	0.35	0.37	0.15	87,97,102	-0.12	-0.15	-0.05	87,97,102
	60.0	0.0	0.60	0.0	0,87,0	0.36	0.35	0.15	87,97,102				
132	0.0	0.0	0.71	0.0	0,87,0	0.39	0.40	0.18	87,97,102	-0.07	-0.09	-0.03	87,97,102
	60.0	0.0	0.69	0.0	0,87,0	0.39	0.38	0.16	87,97,102				
133	0.0	0.0	0.64	0.0	0,87,0	0.37	0.36	0.17	87,97,102	-7.74e-03	-0.01	-0.01	87,97,102
	60.0	0.0	0.68	0.0	0,87,0	0.35	0.37	0.14	87,97,102				
134	0.0	0.0	0.63	0.0	0,87,0	0.37	0.36	0.17	87,97,102	0.05	0.06	0.01	87,97,102
	60.0	0.0	0.71	0.0	0,87,0	0.36	0.39	0.15	87,97,102				
135	0.0	0.0	0.53	0.0	0,87,0	0.31	0.30	0.14	87,97,102	0.11	0.14	0.03	87,97,102

Trave	Pos.	rRfck	rRfyk	rPfck	Rif. cmb	wR	wF	wP	Rif. cmb	dR	dF	dP	Rif. cmb
	60.0	0.0	0.74	0.0	0,87,0	0.37	0.40	0.15	87,97,102				
136	0.0	0.0	0.53	0.0	0,87,0	0.19	0.20	0.14	87,97,102	0.17	0.21	0.05	87,97,102
	60.0	0.0	0.68	0.0	0,87,0	0.32	0.36	0.14	87,97,102				
137	0.0	0.0	0.53	0.0	0,87,0	0.19	0.20	0.08	87,97,102	0.27	0.32	0.08	87,97,102
	60.0	0.0	0.71	0.0	0,87,0	0.33	0.37	0.14	87,97,102				
138	0.0	0.0	0.53	0.0	0,87,0	0.20	0.20	0.08	87,97,102	0.36	0.46	0.12	87,97,102
	60.0	0.0	0.73	0.0	0,87,0	0.34	0.39	0.15	87,97,102				
139	0.0	0.0	0.54	0.0	0,87,0	0.20	0.21	0.08	87,97,102	0.52	0.66	0.18	87,97,102
	60.0	0.0	0.68	0.0	0,87,0	0.30	0.35	0.13	87,97,102				
140	0.0	0.0	0.53	0.0	0,87,0	0.20	0.21	0.08	87,97,102	0.84	0.94	0.27	87,97,102
	60.0	0.0	0.71	0.0	0,87,0	0.32	0.36	0.14	87,97,102				
141	0.0	0.0	0.54	0.0	0,87,0	0.21	0.22	0.08	87,97,102	1.46	1.67	0.37	87,97,102
	60.0	0.0	0.68	0.0	0,87,0	0.30	0.34	0.0	87,97,0				
142	0.0	0.0	0.56	0.0	0,87,0	0.22	0.25	0.10	87,97,102	2.47	3.10	0.40	87,97,102
	60.0	0.0	0.53	0.0	0,87,0	0.21	0.24	0.0	87,97,0				
143	0.0	0.0	0.62	0.0	0,87,0	0.33	0.32	0.0	87,97,0	0.72	0.82	0.22	87,97,102
	60.0	0.12	0.73	0.08	87,87,102	0.26	0.27	0.10	87,97,102				
165	0.0	0.14	0.74	0.08	87,87,102	0.26	0.27	0.10	87,97,102	-0.86	-1.01	-0.22	87,97,102
	60.0	0.0	0.75	0.0	0,87,0	0.36	0.37	0.0	87,97,0				
166	0.0	0.0	0.58	0.0	0,87,0	0.23	0.25	0.09	87,97,102	-1.39	-1.56	-0.30	87,97,102
	60.0	0.0	0.54	0.0	0,87,0	0.21	0.23	0.08	87,97,102				
167	0.0	0.0	0.76	0.0	0,87,0	0.34	0.38	0.0	87,97,0	-1.15	-1.36	-0.24	87,97,102
	60.0	0.0	0.53	0.0	0,87,0	0.19	0.20	0.07	87,97,102				
168	0.0	0.0	0.73	0.0	0,87,0	0.32	0.36	0.13	87,97,102	-0.69	-0.80	-0.18	87,97,102
	60.0	0.0	0.53	0.0	0,87,0	0.19	0.19	0.07	87,97,102				
169	0.0	0.0	0.72	0.0	0,87,0	0.32	0.36	0.12	87,97,102	-0.46	-0.53	-0.10	87,97,102
	60.0	0.0	0.52	0.0	0,87,0	0.18	0.19	0.06	87,97,102				
170	0.0	0.0	0.70	0.0	0,87,0	0.31	0.35	0.12	87,97,102	-0.29	-0.33	-0.09	87,97,102
	60.0	0.0	0.52	0.0	0,87,0	0.18	0.18	0.12	87,97,102				
171	0.0	0.0	0.70	0.0	0,87,0	0.33	0.36	0.13	87,97,102	-0.18	-0.23	-0.07	87,97,102
	60.0	0.0	0.51	0.0	0,87,0	0.18	0.18	0.12	87,97,102				
172	0.0	0.0	0.71	0.0	0,87,0	0.36	0.39	0.15	87,97,102	-0.13	-0.16	-0.05	87,97,102
	60.0	0.0	0.63	0.0	0,87,0	0.37	0.36	0.15	87,97,102				
173	0.0	0.0	0.64	0.0	0,87,0	0.33	0.34	0.15	87,97,102	-0.06	-0.08	-0.03	87,97,102
	60.0	0.0	0.63	0.0	0,87,0	0.33	0.33	0.13	87,97,102				
174	0.0	0.0	0.57	0.0	0,87,0	0.32	0.31	0.15	87,97,102	-0.01	-0.01	-0.01	86,96,102
	60.0	0.0	0.72	0.0	0,87,0	0.36	0.39	0.14	87,97,102				
175	0.0	0.0	0.56	0.0	0,87,0	0.32	0.30	0.14	87,97,102	0.05	0.06	0.01	87,97,102
	60.0	0.0	0.66	0.0	0,87,0	0.32	0.35	0.13	87,97,102				
176	0.0	0.0	0.55	0.0	0,87,0	0.31	0.30	0.14	87,97,102	0.11	0.14	0.03	87,97,102
	60.0	0.0	0.68	0.0	0,87,0	0.32	0.36	0.13	87,97,102				
177	0.0	0.0	0.53	0.0	0,87,0	0.31	0.30	0.14	87,97,102	0.18	0.22	0.05	87,97,102
	60.0	0.0	0.70	0.0	0,87,0	0.33	0.37	0.14	87,97,102				
178	0.0	0.0	0.52	0.0	0,87,0	0.19	0.20	0.08	87,97,102	0.27	0.33	0.08	87,97,102
	60.0	0.0	0.72	0.0	0,87,0	0.33	0.38	0.14	87,97,102				
179	0.0	0.0	0.53	0.0	0,87,0	0.20	0.20	0.08	87,97,102	0.38	0.49	0.12	87,97,102
	60.0	0.0	0.74	0.0	0,87,0	0.34	0.39	0.15	87,97,102				
180	0.0	0.0	0.54	0.0	0,87,0	0.20	0.21	0.08	87,97,102	0.57	0.66	0.18	87,97,102
	60.0	0.0	0.68	0.0	0,87,0	0.30	0.35	0.13	87,97,102				
181	0.0	0.0	0.54	0.0	0,87,0	0.20	0.21	0.08	87,97,102	0.73	0.91	0.27	87,97,102
	60.0	0.0	0.71	0.0	0,87,0	0.32	0.36	0.14	87,97,102				
182	0.0	0.0	0.54	0.0	0,87,0	0.21	0.23	0.09	87,97,102	1.52	1.73	0.36	87,97,102
	60.0	0.0	0.67	0.0	0,87,0	0.30	0.34	0.0	87,97,0				
183	0.0	0.0	0.57	0.0	0,87,0	0.23	0.26	0.10	87,97,102	2.69	3.50	0.39	87,97,102
	60.0	0.0	0.57	0.0	0,87,0	0.23	0.26	0.0	87,97,0				
184	0.0	0.0	0.64	0.0	0,87,0	0.33	0.32	0.0	87,97,0	0.74	0.84	0.22	87,97,102
	60.0	0.13	0.75	0.08	87,87,102	0.27	0.28	0.10	87,97,102				
Trave		**rRfck**	**rRfyk**	**rPfck**		**wR**	**wF**	**wP**		**dR**	**dF**	**dP**	
										-1.70	-1.95	-0.30	
		0.14	0.76	0.08		0.39	0.40	0.18		2.90	3.58	0.40	

Guscio	rRfck	rRfyk	rPfck	Rif. cmb	wR	wF	wP	Rif. cmb
					mm	mm	mm	
1	0.15	0.75	0.08	87,87,102	0.23	0.24	0.08	87,97,102
2	0.04	0.44	0.02	87,87,102	0.11	0.13	0.0	87,97,0
3	0.04	0.35	0.04	87,87,102	0.08	0.07	0.0	87,97,0
4	0.10	0.25	0.08	87,87,102	0.0	0.0	0.0	0,0,0
5	0.14	0.15	0.10	87,87,102	0.0	0.0	0.0	0,0,0

Guscio	rRfck	rRfyk	rPfck	Rif. cmb	wR	wF	wP	Rif. cmb
6	0.19	0.14	0.13	87,87,102	0.0	0.0	0.0	0,0,0
7	0.23	0.18	0.15	87,87,102	0.0	0.0	0.0	0,0,0
8	0.26	0.21	0.16	87,87,102	0.0	0.0	0.0	0,0,0
9	0.29	0.24	0.17	87,87,102	0.0	0.0	0.0	0,0,0
10	0.32	0.26	0.18	87,87,102	0.0	0.0	0.0	0,0,0
11	0.34	0.27	0.18	87,87,102	0.0	0.0	0.0	0,0,0
12	0.34	0.28	0.17	87,87,102	0.0	0.0	0.0	0,0,0
13	0.34	0.27	0.16	87,87,102	0.0	0.0	0.0	0,0,0
14	0.31	0.25	0.15	87,87,102	0.0	0.0	0.0	0,0,0
15	0.27	0.22	0.13	87,87,102	0.0	0.0	0.0	0,0,0
16	0.21	0.16	0.10	87,87,102	0.0	0.0	0.0	0,0,0
17	0.15	0.22	0.08	87,87,102	0.0	0.0	0.0	0,0,0
18	0.09	0.33	0.04	87,87,102	0.07	0.06	0.0	87,97,0
19	0.06	0.43	0.02	87,87,102	0.11	0.12	0.0	87,97,0
20	0.15	0.76	0.08	87,87,102	0.24	0.25	0.09	87,97,102
21	0.12	0.75	0.06	87,87,102	0.22	0.23	0.07	87,97,102
22	0.01	0.45	0.02	86,87,102	0.11	0.13	0.0	87,97,0
23	0.04	0.33	0.05	87,87,102	0.07	0.07	0.0	87,97,0
24	0.10	0.22	0.08	87,87,102	0.0	0.0	0.0	0,0,0
25	0.14	0.13	0.10	87,87,102	0.0	0.0	0.0	0,0,0
26	0.18	0.14	0.13	87,87,102	0.0	0.0	0.0	0,0,0
27	0.22	0.18	0.15	87,87,102	0.0	0.0	0.0	0,0,0
28	0.26	0.21	0.16	87,87,102	0.0	0.0	0.0	0,0,0
29	0.29	0.24	0.17	87,87,102	0.0	0.0	0.0	0,0,0
30	0.31	0.26	0.18	87,87,102	0.0	0.0	0.0	0,0,0
31	0.34	0.27	0.18	87,87,102	0.0	0.0	0.0	0,0,0
32	0.34	0.28	0.17	87,87,102	0.0	0.0	0.0	0,0,0
33	0.34	0.27	0.16	87,87,102	0.0	0.0	0.0	0,0,0
34	0.31	0.25	0.15	87,87,102	0.0	0.0	0.0	0,0,0
35	0.26	0.21	0.13	87,87,102	0.0	0.0	0.0	0,0,0
36	0.20	0.16	0.10	87,87,102	0.0	0.0	0.0	0,0,0
37	0.15	0.18	0.08	87,87,102	0.0	0.0	0.0	0,0,0
38	0.09	0.29	0.05	87,87,102	0.06	0.06	0.0	87,97,0
39	0.04	0.40	0.02	87,87,102	0.10	0.11	0.0	87,97,0
40	0.12	0.76	0.07	87,87,102	0.24	0.25	0.09	87,97,102
41	0.13	0.75	0.06	87,87,102	0.22	0.23	0.07	87,97,102
42	0.01	0.45	0.02	87,87,102	0.11	0.13	0.0	87,97,0
43	0.05	0.33	0.05	87,87,102	0.07	0.07	0.0	87,97,0
44	0.10	0.22	0.08	87,87,102	0.0	0.0	0.0	0,0,0
45	0.14	0.13	0.10	87,87,102	0.0	0.0	0.0	0,0,0
46	0.18	0.14	0.13	87,87,102	0.0	0.0	0.0	0,0,0
47	0.22	0.18	0.15	87,87,102	0.0	0.0	0.0	0,0,0
48	0.26	0.21	0.16	87,87,102	0.0	0.0	0.0	0,0,0
49	0.29	0.24	0.17	87,87,102	0.0	0.0	0.0	0,0,0
50	0.31	0.26	0.18	87,87,102	0.0	0.0	0.0	0,0,0
51	0.34	0.27	0.18	87,87,102	0.0	0.0	0.0	0,0,0
52	0.34	0.28	0.17	87,87,102	0.0	0.0	0.0	0,0,0
53	0.34	0.27	0.16	87,87,102	0.0	0.0	0.0	0,0,0
54	0.31	0.25	0.15	87,87,102	0.0	0.0	0.0	0,0,0
55	0.26	0.21	0.13	87,87,102	0.0	0.0	0.0	0,0,0
56	0.20	0.16	0.10	87,87,102	0.0	0.0	0.0	0,0,0
57	0.15	0.18	0.08	87,87,102	0.0	0.0	0.0	0,0,0
58	0.09	0.29	0.05	87,87,102	0.06	0.06	0.0	87,97,0
59	0.04	0.40	0.02	87,87,102	0.10	0.11	0.0	87,97,0
60	0.12	0.76	0.07	87,87,102	0.24	0.25	0.09	87,97,102
61	0.15	0.75	0.08	87,87,102	0.23	0.24	0.08	87,97,102
62	0.05	0.45	0.02	87,87,102	0.11	0.13	0.0	87,97,0
63	0.05	0.35	0.04	87,87,102	0.08	0.07	0.0	87,97,0
64	0.10	0.24	0.08	87,87,102	0.0	0.0	0.0	0,0,0
65	0.14	0.15	0.10	87,87,102	0.0	0.0	0.0	0,0,0
66	0.19	0.14	0.13	87,87,102	0.0	0.0	0.0	0,0,0
67	0.23	0.18	0.15	87,87,102	0.0	0.0	0.0	0,0,0
68	0.26	0.21	0.16	87,87,102	0.0	0.0	0.0	0,0,0
69	0.29	0.24	0.17	87,87,102	0.0	0.0	0.0	0,0,0
70	0.32	0.26	0.18	87,87,102	0.0	0.0	0.0	0,0,0
71	0.34	0.27	0.18	87,87,102	0.0	0.0	0.0	0,0,0
72	0.34	0.28	0.17	87,87,102	0.0	0.0	0.0	0,0,0
73	0.34	0.27	0.16	87,87,102	0.0	0.0	0.0	0,0,0
74	0.31	0.25	0.15	87,87,102	0.0	0.0	0.0	0,0,0
75	0.27	0.22	0.13	87,87,102	0.0	0.0	0.0	0,0,0
76	0.21	0.16	0.10	87,87,102	0.0	0.0	0.0	0,0,0
77	0.15	0.22	0.08	87,87,102	0.0	0.0	0.0	0,0,0
78	0.09	0.33	0.04	87,87,102	0.07	0.06	0.0	87,97,0

Guscio	rRfck	rRfyk	rPfck	Rif. cmb	wR	wF	wP	Rif. cmb
79	0.06	0.43	0.02	87,87,102	0.11	0.12	0.0	87,97,0
80	0.15	0.76	0.08	87,87,102	0.24	0.25	0.09	87,97,102
81	0.16	0.75	0.09	87,87,102	0.18	0.19	0.06	87,97,102
82	0.04	0.61	0.03	87,87,102	0.17	0.18	0.06	87,97,102
83	0.05	0.53	0.05	87,87,102	0.12	0.13	0.0	87,97,0
84	0.10	0.40	0.08	87,87,102	0.06	0.07	0.0	87,97,0
85	0.15	0.26	0.11	87,87,102	0.04	0.04	0.0	87,97,0
86	0.20	0.16	0.14	87,87,102	0.0	0.0	0.0	0,0,0
87	0.24	0.19	0.15	87,87,102	0.0	0.0	0.0	0,0,0
88	0.27	0.22	0.17	87,87,102	0.0	0.0	0.0	0,0,0
89	0.30	0.25	0.17	87,87,102	0.0	0.0	0.0	0,0,0
90	0.32	0.26	0.17	87,87,102	0.0	0.0	0.0	0,0,0
91	0.34	0.28	0.17	87,87,102	0.0	0.0	0.0	0,0,0
92	0.35	0.28	0.17	87,87,102	0.0	0.0	0.0	0,0,0
93	0.34	0.28	0.17	87,87,102	0.0	0.0	0.0	0,0,0
94	0.33	0.27	0.15	87,87,102	0.0	0.0	0.0	0,0,0
95	0.29	0.24	0.14	87,87,102	0.0	0.0	0.0	0,0,0
96	0.23	0.23	0.11	87,87,102	0.03	0.03	0.0	87,97,0
97	0.17	0.36	0.08	87,87,102	0.06	0.06	0.0	87,97,0
98	0.10	0.52	0.05	87,87,102	0.10	0.12	0.0	87,97,0
99	0.05	0.58	0.03	87,87,102	0.15	0.16	0.06	87,97,102
100	0.15	0.76	0.09	87,87,102	0.19	0.20	0.08	87,97,102
101	0.16	0.75	0.09	87,87,102	0.18	0.19	0.06	87,97,102
102	0.04	0.61	0.03	87,87,102	0.17	0.18	0.06	87,97,102
103	0.05	0.53	0.05	87,87,102	0.12	0.13	0.0	87,97,0
104	0.10	0.39	0.08	87,87,102	0.06	0.07	0.0	87,97,0
105	0.15	0.26	0.11	87,87,102	0.04	0.04	0.0	87,97,0
106	0.20	0.16	0.14	87,87,102	0.0	0.0	0.0	0,0,0
107	0.24	0.19	0.15	87,87,102	0.0	0.0	0.0	0,0,0
108	0.27	0.22	0.17	87,87,102	0.0	0.0	0.0	0,0,0
109	0.30	0.25	0.17	87,87,102	0.0	0.0	0.0	0,0,0
110	0.32	0.26	0.17	87,87,102	0.0	0.0	0.0	0,0,0
111	0.34	0.28	0.17	87,87,102	0.0	0.0	0.0	0,0,0
112	0.35	0.28	0.17	87,87,102	0.0	0.0	0.0	0,0,0
113	0.34	0.28	0.17	87,87,102	0.0	0.0	0.0	0,0,0
114	0.33	0.27	0.15	87,87,102	0.0	0.0	0.0	0,0,0
115	0.29	0.24	0.14	87,87,102	0.0	0.0	0.0	0,0,0
116	0.23	0.23	0.11	87,87,102	0.03	0.03	0.0	87,97,0
117	0.17	0.36	0.08	87,87,102	0.06	0.06	0.0	87,97,0
118	0.10	0.53	0.05	87,87,102	0.10	0.12	0.0	87,97,0
119	0.05	0.58	0.03	87,87,102	0.15	0.16	0.06	87,97,102
120	0.15	0.76	0.09	87,87,102	0.19	0.20	0.08	87,97,102
Guscio	**rRfck**	**rRfyk**	**rPfck**		**wR**	**wF**	**wP**	
	0.35	0.76	0.18		0.24	0.25	0.09	

9 RIFERIMENTI NORMATIVI E BIBLIOGRAFICI

9.1 RIFERIMENTI NORMATIVI E SPECIFICHE TECNICHE

[1] Decreto Ministeriale Infrastrutture 17 gennaio 2018 "*Nuove Norme Tecniche per le Costruzioni*", e indicato anche con N.T.C. nel presente documento.

[2] CIRCOLARE 21 gennaio 2019 , n. 7 C.S.LL.PP. - Istruzioni per l'applicazione dell'«Aggiornamento delle "Norme tecniche per le costruzioni"» di cui al decreto ministeriale 17 gennaio 2018.

[3] Decreto Ministeriale Infrastrutture 14 gennaio 2008 "*Nuove Norme Tecniche per le Costruzioni*", e indicato anche con N.T.C. nel presente documento.

[4] Indirizzi e Criteri di microzonazione Sismica del Dipartimento della Protezione Civile Nazionale (ICMS) approvati il 13 novembre 2008 dalla conferenza delle Regioni e delle Province autonome;

[5] D.Min. Infrastrutture e trasporti 14 Settembre 2005 e allegate "Norme tecniche per le costruzioni".

[6] D.M. LL.PP. 9 Gennaio 1996 "Norme tecniche per il calcolo, l'esecuzione ed il collaudo delle strutture in cemento armato, normale e precompresso e per le strutture metalliche".

[7] D.M. LL.PP. 16 Gennaio 1996 "Norme tecniche relative ai <<Criteri generali per la verifica di sicurezza delle costruzioni e dei carichi e sovraccarichi>>".

[8] D.M. LL.PP. 16 Gennaio 1996 "Norme tecniche per le costruzioni in zone sismiche".

[9] Circolare 4/07/96, n.156AA.GG./STC. istruzioni per l'applicazione delle "Norme tecniche relative ai <<Criteri generali per la verifica di sicurezza delle costruzioni e dei carichi e sovraccarichi>>" di cui al D.M. 16/01/96.

[10] Circolare 10/04/97, n.65AA.GG. istruzioni per l'applicazione delle "Norme tecniche per le costruzioni in zone sismiche" di cui al D.M. 16/01/96.

[11] D.M. LL.PP. 20 Novembre 1987 "Norme tecniche per la progettazione, esecuzione e collaudo degli edifici in muratura e per il loro consolidamento".

[12] Circolare 4 Gennaio 1989 n. 30787 "Istruzioni in merito alle norme tecniche per la progettazione, esecuzione e collaudo degli edifici in muratura e per il loro consolidamento".

[13] D.M. LL.PP. 11 Marzo 1988 "Norme tecniche riguardanti le indagini sui terreni e sulle rocce, la stabilità dei pendii naturali e delle scarpate, i criteri generali e le prescrizioni per la progettazione, l'esecuzione e il collaudo delle opere di sostegno delle terre e delle opere di fondazione".

[14] D.M. LL.PP. 3 Dicembre 1987 "Norme tecniche per la progettazione, esecuzione e collaudo delle costruzioni prefabbricate".

[15] UNI 9502 - Procedimento analitico per valutare la resistenza al fuoco degli elementi costruttivi di conglomerato cementizio armato, normale e precompresso - edizione maggio 2001

[16] Ordinanza del Presidente del Consiglio dei Ministri n. 3274 del 20 marzo 2003 "Primi elementi in materia di criteri generali per la classificazione sismica del territorio nazionale e di normative tecniche per le costruzioni in zona sismica" e successive modificazioni e integrazioni.

[17] UNI EN 1990:2006 13/04/2006 Eurocodice 0 - Criteri generali di progettazione strutturale.

[18] UNI EN 1991-1-1:2004 01/08/2004 Eurocodice 1 - Azioni sulle strutture - Parte 1-1: Azioni in generale - Pesi per unità di volume, pesi propri e sovraccarichi per gli edifici.

[19] UNI EN 1991-2:2005 01/03/2005 Eurocodice 1 - Azioni sulle strutture - Parte 2: Carichi da traffico sui ponti.

[20] UNI EN 1991-1-3:2004 01/10/2004 Eurocodice 1 - Azioni sulle strutture - Parte 1-3: Azioni in generale - Carichi da neve.

[21] UNI EN 1991-1-4:2005 01/07/2005 Eurocodice 1 - Azioni sulle strutture - Parte 1-4: Azioni in generale - Azioni del vento.

[22] UNI EN 1991-1-5:2004 01/10/2004 Eurocodice 1 - Azioni sulle strutture - Parte 1-5: Azioni in generale - Azioni termiche.

[23] UNI EN 1992-1-1:2005 24/11/2005 Eurocodice 2 - Progettazione delle strutture di calcestruzzo - Parte 1-1: Regole generali e regole per gli edifici.

[24] UNI EN 1992-1-2:2005 01/04/2005 Eurocodice 2 - Progettazione delle strutture di calcestruzzo - Parte 1-2: Regole generali - Progettazione strutturale contro l'incendio.

[25] UNI EN 1993-1-1:2005 01/08/2005 Eurocodice 3 - Progettazione delle strutture di acciaio - Parte 1-1: Regole generali e regole per gli edifici.

[26] UNI EN 1993-1-8:2005 01/08/2005 Eurocodice 3 - Progettazione delle strutture di acciaio - Parte 1-8: Progettazione dei collegamenti.

[27] UNI EN 1994-1-1:2005 01/03/2005 Eurocodice 4 - Progettazione delle strutture composte acciaio-calcestruzzo - Parte 1-1: Regole generali e regole per gli edifici.

[28] UNI EN 1994-2:2006 12/01/2006 Eurocodice 4 - Progettazione delle strutture composte acciaio-calcestruzzo - Parte 2: Regole generali e regole per i ponti.

[29] UNI EN 1995-1-1:2005 01/02/2005 Eurocodice 5 - Progettazione delle strutture di legno - Parte 1-1: Regole generali – Regole comuni e regole per gli edifici.

[30] UNI EN 1995-2:2005 01/01/2005 Eurocodice 5 - Progettazione delle strutture di legno - Parte 2: Ponti.

[31] UNI EN 1996-1-1:2006 26/01/2006 Eurocodice 6 - Progettazione delle strutture di muratura - Parte 1-1: Regole generali per strutture di muratura armata e non armata.

[32] UNI EN 1996-3:2006 09/03/2006 Eurocodice 6 - Progettazione delle strutture di muratura - Parte 3: Metodi di calcolo semplificato per strutture di muratura non armata.

[33] UNI EN 1997-1:2005 01/02/2005 Eurocodice 7 - Progettazione geotecnica - Parte 1: Regole generali.

[34] UNI EN 1998-1:2005 01/03/2005 Eurocodice 8 - Progettazione delle strutture per la resistenza sismica - Parte 1: Regole generali, azioni sismiche e regole per gli edifici.

[35] UNI EN 1998-3:2005 01/08/2005 Eurocodice 8 - Progettazione delle strutture per la resistenza sismica - Parte 3: Valutazione e adeguamento degli edifici.

[36] UNI EN 1998-5:2005 01/01/2005 Eurocodice 8 - Progettazione delle strutture per la resistenza sismica - Parte 5: Fondazioni, strutture di contenimento ed aspetti geotecnici.

9.2 RIFERIMENTI BIBLIOGRAFICI

[37] Bowles, J. E., 1988, Fondazioni progetto e analisi, McGraw-Hill 1999.
[38] Poulos, H.G., Davis, E.H., 1980, Analisi e progettazione di fondazioni su pali, Dario Flaccovio Editore 2002.
[39] Lancellotta, R., Costanzo, D., Foti, S., 2011, Progettazione Geotecnica secondo l'Eurocodice 7 (UNI EN 1997) e le Norme Tecniche per le costruzioni (NTC2008), HOEPLI Ingegneria.
[40] Viggiani, C., Mandolini, A., Russo, G., 2012, Piles and Piles Foundations, Spon Press Taylor & Francis.
[41] Tomlinson, M., Woodward, J., 2015, Pile Design and Construction Pratice, CRC Press

10 ACCETTAZIONE DEI RISULTATI

I risultati delle elaborazioni sono stati sottoposti a controlli che ne comprovano l'attendibilità.

Tale valutazione ha compreso il confronto con i risultati di semplici calcoli, eseguiti con metodi tradizionali e adottati anche in fase di primo proporzionamento della struttura, Inoltre, sulla base di considerazioni riguardanti gli stati tensionali e deformativi determinati, si è valutata la validità delle scelte operate in sede di schematizzazione e di modellazione della struttura e delle azioni.

In base a quando detto, si può asserire che l'elaborazione è corretta ed idonea al caso specifico, pertanto i risultati di calcolo sono da ritenersi validi ed accettabili.

Si riporta un TEST DI VERIFICA PLATEA NERVATA per verifica verifica controllo accettazione.

Test 38 PLATEA NERVATA

Revisione: 01
Data: 29/03/2010
Programma: PRO_SAP
Versione: 2007-03-143; 2010-05-151
File: Mod00_T039_plateaNervata_ALGOR.PSP

- **Scopo:**

Validazione del comportamento delle platee su suolo alla winkler con nervature costituite da elementi D2 e da elementi D3 (A).

- **Descrizione test:**

Si considera una platea di fondazione costituita da elementi D3 su suolo alla Winkler con nervature costituite da elementi D2 e da elementi D3.

DATI GEOMETRICI:
Lastra di 500 cm X 500 cm su suolo alla Winkler di calcestruzzo spessa 30 cm con nervature rettangolari incrociate caricate con carico distribuito lineare q=20 daN/cm alte 100 cm e spesse 30 cm. Ai bordi sono state bloccate le traslazioni in direzione ortogonale al piano medio della soletta, quelle ortogonali al lato soletta e la rotazione di asse ortogonale al piano della soletta. Si e' assunta una costante di Winkler k=1daN/cm³.

Lastra nervata e carichi con nervature modellate con elementi D2 (beam).

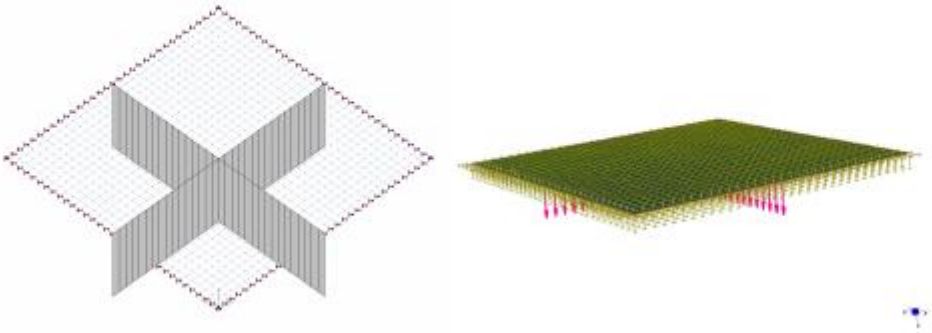

Lastra nervata e carichi con nervature modellate con elementi D3 (plate and shell).

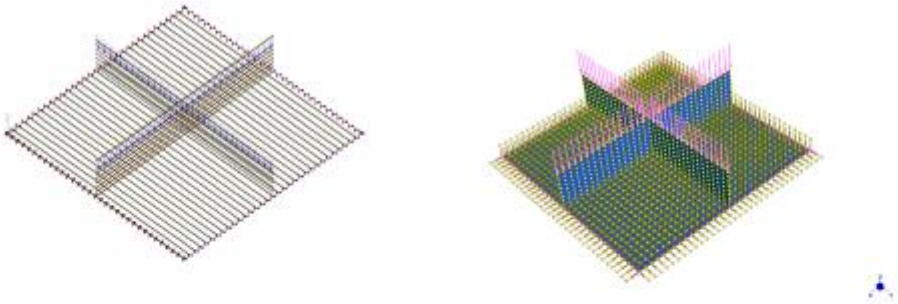

- **Tipo di confronto:**

E' stato effettuato un confronto tra i risultati ottenuti con ALGOR e quelli ottenuti con altro software.

Rev:	Data:	File:	Programma:	Tecnico:
00	16/07/08	Mod00_T039_plateaNervata_ALGOR.PSP	PRO_SAP vers. 2007-03-141	Ing. G. Milani

- **Tabella risultati:**

I momenti sono riportati in valore assoluto e valutati al centro della piastra. La massima deflessione si verifica la centro della lastra. I risultati si riferiscono al caso di carico "Variabile generico".

Caso nervature D2

Parametro	Soluzione ALGOR	Soluzione altro software	Differenza
M11 [daN cm/cm]	488.52	494.91	1.29%
M22 [daN cm/cm]	488.52	494.91	1.29%
M12 [daN cm/cm]	3.99	3.7	7.84%
Max deflessione [cm]	0.01347	0.0142	5.14%

Caso nervature D3

Parametro	Soluzione ALGOR	Soluzione altro software	Differenza
M11 [daN cm/cm]	206.79	214.67	3.67%
M22 [daN cm/cm]	203.58	214.67	5.17%
M12 [daN cm/cm]	1.30	1.25	4.00%
Max deflessione [cm]	0.00706	0.00698	1.15%

- **Commenti:**

I risultati numerici sono in ottimo accordo con quelli di riferimento.

- **Allegati:**

Rev:	Data:	File:	Programma:	Tecnico:
00	16/07/08	Mod00_T039_plateaNervata_ALGOR.PSP	PRO_SAP vers. 2007-03-141	Ing. G. Milani

Modulo base Pagina 206

Caso di nervature realizzate mediante elementi D2 (beam)

Confronto tra le mappe di M11 ottenuti con ALGOR (a sinistra) e altro software (a destra).

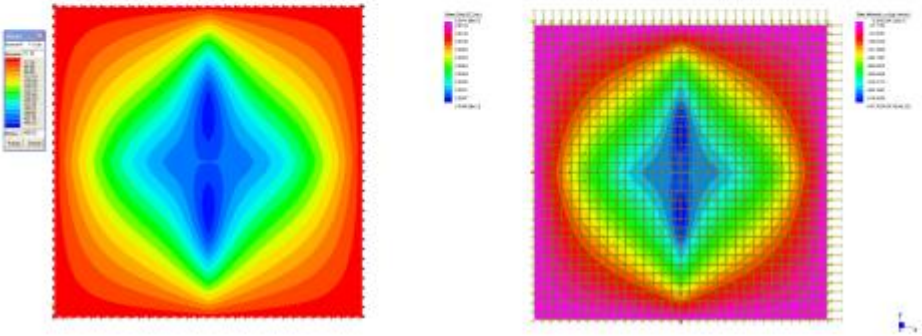

Confronto tra le mappe di M22 ottenuti con ALGOR (a sinistra) e altro software (a destra).

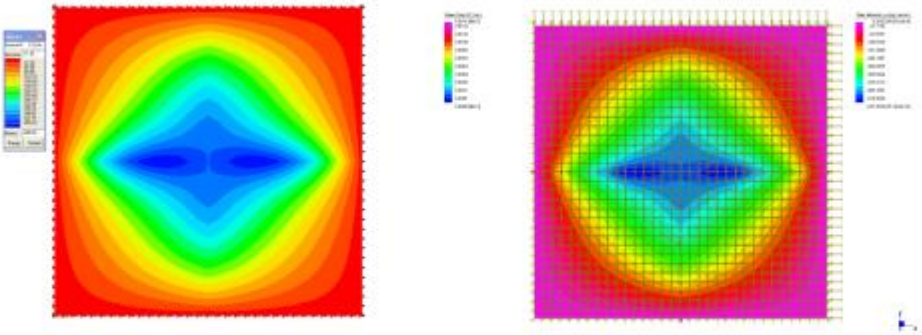

Confronto tra le mappe di M12 ottenuti con ALGOR (a sinistra) e altro software (a destra).

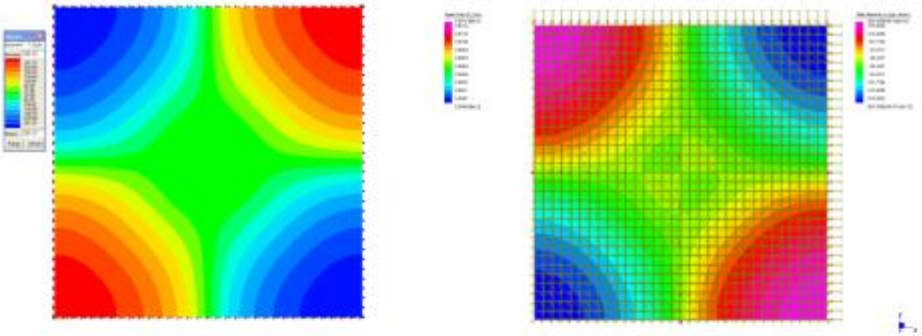

Rev:	Data:	File:	Programma:	Tecnico:
00	16/07/08	Mod00_T039_plateaNervata_ALGOR.PSP	PRO_SAP vers. 2007-03-141	Ing. G. Milani

Modulo base Pagina 207

Caso di nervature realizzate mediante elementi D3 (plate and shell)

Confronto tra le mappe di M11 ottenuti con ALGOR (a sinistra) e altro software (a destra).

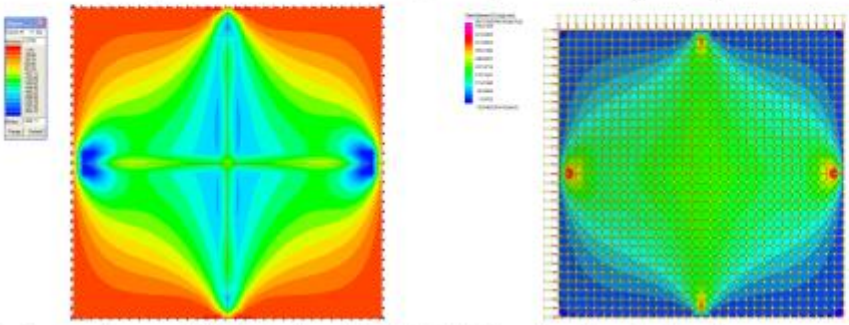

Confronto tra le mappe di M22 ottenuti con ALGOR (a sinistra) e altro software (a destra).

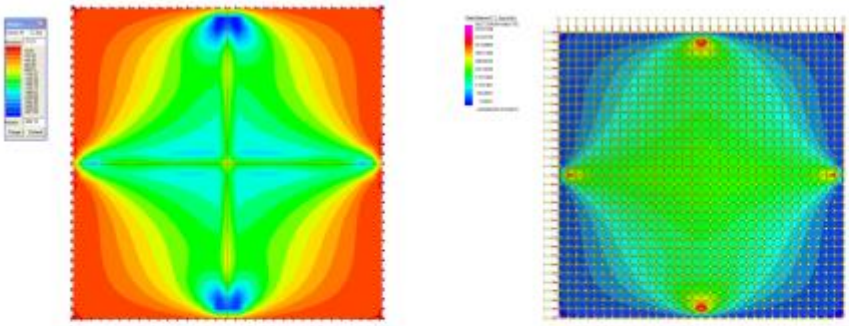

Confronto tra le mappe di M12 ottenuti con ALGOR (a sinistra) e altro software (a destra).

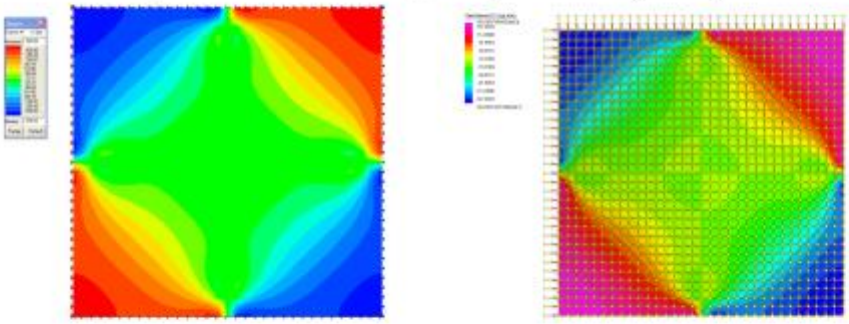

Rev:	Data:	File:	Programma:	Tecnico:
00	16/07/08	Mod00_T039_plateaNervata_ALGOR.PSP	PRO_SAP vers. 2007-03-141	Ing. G. Milani

Modulo base Pagina 208

ALLEGATO 1 TECNICO - SPECIFICHE TECNICHE SOFTWARE CALCOLO STRUTTURALE

Allegato 1. 1: PROSAP 2S.I. Sotware strutturale

Dichiarazione affidabilità

Dichiarazione del produttore-distributore di PRO_SAP PROfessional SAP riguardante l'affidabilità del codice
(D.M. 14/01/2008 - Paragrafo 10.2)

Origine e caratteristiche dei codici di calcolo
Titolo: PRO_SAP PROfessional Structural Analysis Program
Autore-Produttore: 2S.I. Software e Servizi per l'Ingegneria s.r.l., Ferrara

Affidabilità dei codici

- Inquadramento teorico della metodologia
L'analisi strutturale viene effettuata con il metodo degli elementi finiti. Il metodo si basa sulla schematizzazione della struttura in elementi connessi in corrispondenza di un numero prefissato di punti denominati nodi. I nodi sono definiti dalle tre coordinate cartesiane in un sistema di riferimento globale. L'analisi strutturale è condotta con il metodo degli spostamenti per la valutazione dello stato tensiodeformativo indotto da carichi statici.
L'analisi strutturale è condotta con il metodo dell'analisi modale e dello spettro di risposta in termini di accelerazione per la valutazione dello stato tensiodeformativo indotto da carichi dinamici (tra cui quelli di tipo sismico).
Gli elementi utilizzati per la modellazione dello schema statico della struttura sono i seguenti:

Elemento tipo TRUSS (asta)*
Elemento tipo BEAM (trave)*
Elemento tipo MEMBRANE (membrana)*
Elemento tipo PLATE (piastra-guscio)*
Elemento tipo BRICK (solido)
Elemento tipo BOUNDARY (molla)*
Elemento tipo STIFFNESS (matrice di rigidezza)

*** anche non lineare**

- Casi prova che consentano un riscontro dell'affidabilità
2S.I. ha verificato, in collaborazione con il DISTART dell'Università di Bologna e con il Dipartimento di Ingegneria dell'Università di Ferrara, l'affidabilità e la robustezza del codice di calcolo attraverso un numero significativo di casi prova in cui i risultati dell'analisi numerica sono stati confrontati con soluzioni teoriche.
E' possibile reperire la documentazione contenente alcuni dei più significativi casi trattati al seguente link:
http://www.2si.it/affidabilita.php

- Filtri di autodiagnostica
Il programma prevede una serie di controlli automatici (check) che consentono l'individuazione di errori di modellazione.
Al termine dell'analisi un controllo automatico identifica la presenza di spostamenti o rotazioni abnormi.

Garanzia di qualità

Dal 1 dicembre 1999 2S.I. ha prodotto un manuale di qualità in funzione dei requisiti della norma di riferimento UNI EN ISO 9001.
Tutte le attività dell'azienda sono regolate dalla documentazione e dalle procedure in esso contenute.
In relazione alla attività di validazione dei prodotti software si dichiara inoltre quanto segue:
- la fase di progetto degli algoritmi è preceduta dalla ricerca di risultati di confronto reperibili in bibliografia o riproducibili con calcoli manuali;
- la fase di implementazione degli algoritmi è continuamente validata con strumenti automatici (tools di sviluppo) e attraverso confronti;
- il software che implementa gli algoritmi è testato, confrontato e controllato anche da tecnici qualificati che non sono intervenuti nelle precedenti fasi.

Nella produzione del solutore fem 2S.I. implementa componenti sviluppati da CM2 - Computing Objects SARL spin-off dell'École Centrale Paris, France. E' disponibile la documentazione di affidabilità di tali componenti all'indirizzo web:
http://www.2si.it/software/download/manuali/pro_sap quaderni/Affidabilita/benchmarks_e_sap.zip

PRO_SAP
PROfessional Structural Analysis Program

Rev. del 05/06/2013

Allegato 1. 2: API ++ FULL Software Geotecnico

API ++ Full
Platee, Plinti e Graticci

Il programma **API++ Full** è dedicato all'analisi delle fondazioni. Esso consente di analizzare platee, platee nervate, platee su pali, piastre in elevazione, graticci di travi, plinti superficiali e su pali.

E' disponibile in tre versioni indipendenti fra di loro:

- API++ Platee e Graticci;
- API++ Plinti e Graticci;
- API++ Full (che comprende sia il modulo Platee che il modulo Plinti).

API ++
Plinti e Graticci

API ++ FULL
Dichiarazioni di Affidabilità secondo N.T.C. 2018 (punto 10.2)

Analisi e verifiche svolte con l'ausilio di codici di calcolo e t**ipo di analisi svolta**
L'analisi strutturale e le verifiche sono condotte con l'ausilio di un codice di calcolo automatico. La verifica della sicurezza degli elementi strutturali è stata valutata con i metodi della scienza delle costruzioni. Per il calcolo di piastre, plinti e graticci si utilizza il metodo degli elementi finiti. Il generatore di mesh permette di utilizzare elementi triangolari o quadrangolari, anche a deformabilità tagliante. Per le strutture di fondazione il terreno viene modellato con una serie di molle alla Winkler non reagenti a trazione. Il calcolo delle tensioni indotte nele terreno può essere condotto con i metodi di Boussinesq, Westergaad o Frohlich. Il calcolo dei cedimenti può essere eseguito con il metodo edometrico (con il modulo edometrico o con la curva edometrica) o elastico. Il calcolo della portanza può essere fatto con i metodi di Terzaghi, Meyerhof, Hansen o Vesic. In presenza di pali viene eseguito il calcolo di portanza verticale (di punta e laterale) e trasversale (portanza per carichi orizzontali). L'analisi strutturale sotto le azioni sismiche è condotta con il metodo dell'analisi statica equivalente secondo le disposizioni del capitolo 7 del DM 14/01/2018. La verifica delle sezioni degli elementi strutturali è eseguita con il metodo degli Stati Limite. Le combinazioni di carico adottate sono esaustive relativamente agli scenari di carico più gravosi cui l'opera sarà soggetta.

Origine e caratteristiche dei codici di calcolo

Titolo	API^{++} Full (Platee, Plinti e Graticci) - Analisi Fondazioni		
Versione	11.07d -	Produttore	Aztec Informatica srl, Casole Bruzio (CS)
Utente	- Licenza	AIU2877PC	

Affidabilità dei codici di calcolo
Un attento esame preliminare della documentazione a corredo del software ha consentito di valutarne l'affidabilità. La documentazione fornita dal produttore del software contiene un'esauriente descrizione delle basi teoriche, degli algoritmi impiegati e l'individuazione dei campi d'impiego. La società produttrice Aztec Informatica srl ha verificato l'affidabilità e la robustezza del codice di calcolo attraverso un numero significativo di casi prova in cui i risultati dell'analisi numerica sono stati confrontati con soluzioni teoriche.

Modalità di presentazione dei risultati
La relazione di calcolo strutturale presenta i dati di calcolo tale da garantirne la leggibilità, la corretta interpretazione e la riproducibilità. La relazione di calcolo illustra in modo esaustivo i dati in ingresso ed i risultati delle analisi in forma tabellare.

Informazioni generali sull'elaborazione
Il software prevede una serie di controlli automatici che consentono l'individuazione di errori di modellazione, di non rispetto di limitazioni geometriche e di armatura e di presenza di elementi non verificati. Il codice di calcolo consente di visualizzare e controllare, sia in forma grafica che tabellare, i dati del modello strutturale, in modo da avere una visione consapevole del comportamento corretto del modello strutturale.

Giudizio motivato di accettabilità dei risultati
I risultati delle elaborazioni sono stati sottoposti a controlli dal sottoscritto utente del software. Tale valutazione ha compreso il confronto con i risultati di semplici calcoli, eseguiti con metodi tradizionali. Inoltre sulla base di considerazioni riguardanti gli stati tensionali e deformativi determinati, si è valutata la validità delle scelte operate in sede di schematizzazione e di modellazione della struttura e delle zioni. In base a quanto sopra, è asseribile che l'elaborazione è corretta ed idonea al caso specifico, pertanto i risultati di calcolo sono da ritenersi validi ed accettabili.

Allegato 1. 3: CARL 12.00 Software Geotecnico

CARL
Carico Limite e Cedimenti

Il programma **CARL** è dedicato al calcolo del carico limite, dei cedimenti e delle tensioni di fondazioni superficiali e profonde.

Fondazioni superficiali

Le fondazioni superficiali per le quali è possibile eseguire l'analisi sono:
- fondazione nastriforme;
- fondazione circolare;
- fondazione rettangolare.

E' inoltre possibile analizzare il rilevato stradale.

Sulla fondazione possono agire carichi verticali, momenti flettenti e carichi orizzontali. I carichi agenti sono definiti per condizioni, in modo da permettere successivamente di definire le combinazioni di carico.

CARL 12.00

Dichiarazioni di Affidabilità secondo N.T.C. 2018 (punto 10.2)

Analisi e verifiche svolte con l'ausilio di codici di calcolo e t**ipo di analisi svolta**
L'analisi e le verifiche sono condotte con l'ausilio di un codice di calcolo automatico.
La verifica a carico limite viene eseguita secondo le seguenti fasi:
- Calcolo delle caratteristiche del terreno equivalente di progetto;
- Calcolo della fondazione di progetto;
- Calcolo del carico limite.

Il calcolo dei cedimenti viene eseguita secondo le seguenti fasi:
- Calcolo della distribuzione dei carichi al piano di posa;
- Calcolo delle pressioni indotte nel terreno dal carico applicato;
- Calcolo dei cedimenti.

Le combinazioni di carico adottate sono esaustive relativamente agli scenari di carico più gravosi cui l'opera sarà soggetta.

Origine e caratteristiche dei codici di calcolo

Titolo	CARL - Carico Limite e Cedimenti
Versione	12.0 - Produttore Aztec Informatica srl, Casole Bruzio (CS)
Utente	- Licenza AIU2877PC

Affidabilità dei codici di calcolo
Un attento esame preliminare della documentazione a corredo del software ha consentito di valutarne l'affidabilità. La documentazione fornita dal produttore del software contiene un'esauriente descrizione delle basi teoriche, degli algoritmi impiegati e l'individuazione dei campi d'impiego. La società produttrice Aztec Informatica srl ha verificato l'affidabilità e la robustezza del codice di calcolo attraverso un numero significativo di casi prova in cui i risultati dell'analisi numerica sono stati confrontati con soluzioni teoriche.

Modalità di presentazione dei risultati
La relazione di calcolo strutturale presenta i dati di calcolo tale da garantirne la leggibilità, la corretta interpretazione e la riproducibilità. La relazione di calcolo illustra in modo esaustivo i dati in ingresso ed i risultati delle analisi in forma tabellare.

Informazioni generali sull'elaborazione
Il software prevede una serie di controlli automatici che consentono l'individuazione di errori di modellazione, di non rispetto di limitazioni geometriche e di armatura e di presenza di elementi non verificati. Il codice di calcolo consente di visualizzare e controllare, sia in forma grafica che tabellare, i dati del modello strutturale, in modo da avere una visione consapevole del comportamento corretto del modello strutturale.

Giudizio motivato di accettabilità dei risultati
I risultati delle elaborazioni sono stati sottoposti a controlli dal sottoscritto utente del software. Tale valutazione ha compreso il confronto con i risultati di semplici calcoli, eseguiti con metodi tradizionali. Inoltre sulla base di considerazioni riguardanti gli stati tensionali e deformativi determinati, si è valutata la validità delle scelte operate in sede di schematizzazione e di modellazione della struttura e delle azioni.
In base a quanto sopra, io sottoscritto asserisco che l'elaborazione è corretta ed idonea al caso specifico, pertanto i risultati di calcolo sono da ritenersi validi ed accettabili.

ALLEGATO 2 - FASCICOLO DEI CALCOLI

PRO_SAP

PROfessional Structural Analysis Program

Relazione di calcolo strutturale impostata e redatta secondo le modalità previste nel D.M. 17 Gennaio 2018 cap. 10 "Redazione dei progetti strutturali esecutivi e delle relazioni di calcolo".

Origine e Caratteristiche dei Codici di Calcolo	
Codice di calcolo:	PRO_SAP PROfessional Structural Analysis Program
Versione:	PROFESSIONAL (build 2021-05-192)
Produttore- Distributore:	2S.I. Software e Servizi per l'Ingegneria s.r.l. Via Garibaldi, 90 44121 Ferrara FE (Italy) Tel. +39 0532 200091 www.2si.it
Codice Licenza:	Licenza dsi3728

Descrizione	
Progetto	
Ubicazione	Comune di TREVISO (TV) (Regione VENETO)
	Località TREVISO (TV)
	Longitudine 12.244, Latitudine 45.669
Progettista	

In merito al punto 10.2 delle Norme Tecniche per le Costruzioni (*Affidabilità dei codici utilizzati*), si fa riferimento al **Documento di Affidabilità** "Test di validazione del software di calcolo PRO_SAP e dei moduli aggiuntivi PRO_SAP Modulo Geotecnico, PRO_CAD nodi acciaio e PRO_MST" disponibile per il download sul sito: https://www.2si.it/it/prodotti/affidabilita/

11 INTESTAZIONE E CONTENUTI DELLA RELAZIONE

11.1.1 Progetto

Contenuti della relazione:
RELAZIONE DI CALCOLO STRUTTURALE
- Origine e Caratteristiche dei Codici di Calcolo
- Affidabilità dei codici utilizzati
- Validazione dei codici
- Tipo di analisi svolta
- Modalità di presentazione dei risultati
- Informazioni generali sull'elaborazione
- Giudizio motivato di accettabilità dei risultati
STAMPA DEI DATI DI INGRESSO
- Normative prese a riferimento
- Criteri adottati per le misure di sicurezza
- Criteri seguiti nella schematizzazione della struttura, dei vincoli e delle sconessioni
- Interazione tra terreno e struttura
- Legami costitutivi adottati per la modellazione dei materiali e dei terreni
- Schematizzazione delle azioni, condizioni e combinazioni di carico
- Metodologie numeriche utilizzate per l' analisi strutturale
-Metodologie numeriche utilizzate per la progettazione e la verifica degli elementi strutturali
STAMPA DEI RISULTATI

Il Progettista:

29 novembre 2021

12 RELAZIONE DI CALCOLO STRUTTURALE

12.1 Premessa

La presente relazione di calcolo strutturale, in conformità al §10.1 del DM 17/01/18, è comprensiva di una descrizione generale dell'opera e dei criteri generali di analisi e verifica. Segue inoltre le indicazioni fornite al §10.2 del DM stesso per quanto concerne analisi e verifiche svolte con l'ausilio di codici di calcolo.

Nella presente parte sono riportati i principali elementi di inquadramento del progetto esecutivo riguardante le strutture, in relazione agli strumenti urbanistici, al progetto architettonico, al progetto delle componenti tecnologiche in generale ed alle prestazioni attese dalla struttura.

Completare

12.2 Descrizione generale dell'opera

Completare

Descrizione generale dell'opera	
Fabbricato ad uso	
Ubicazione	Comune di TREVISO (TV) (Regione VENETO)
	Località TREVISO (TV)
	Longitudine 12.244, Latitudine 45.669
Numero di piani	Fuori terra
	Interrati
	le dimensioni dell'opera in pianta sono racchiuse in un rettangolo di
Numero vani scale	
Numero vani ascensore	
Tipo di fondazione	

Principali caratteristiche della struttura	
Struttura regolare in pianta	
Struttura regolare in altezza	
Classe di duttilità	
Travi: ricalate o in spessore	
Pilastri	
Pilastri in falso	
Tipo di fondazione	
Condizioni per cui è necessario considerare la componente verticale del sisma	

Parametri della struttura			
Classe d'uso	Vita Vn [anni]	Coeff. Uso	Periodo Vr [anni]

II	50.0	1.0	50.0

Fattore di struttura/comportamento
Completare

12.3 Quadro normativo di riferimento adottato

Le norme ed i documenti assunti quale riferimento per la progettazione strutturale vengono indicati di seguito.

Nel capitolo "normativa di riferimento" è comunque presente l'elenco completo delle normative disponibili.

Progetto-verifica degli elementi	
Progetto cemento armato	D.M. 17-01-2018
Progetto acciaio	D.M. 17-01-2018
Progetto legno	D.M. 17-01-2018
Progetto muratura	D.M. 17-01-2018
Azione sismica	
Norma applicata per l' azione sismica	D.M. 17-01-2018

12.4 Azioni di progetto sulla costruzione

Nei capitoli "modellazione delle azioni" e "schematizzazione dei casi di carico" sono indicate le azioni sulla costruzioni.

Nel prosieguo si indicano tipo di analisi strutturale condotta (statico,dinamico, lineare o non lineare) e il metodo adottato per la risoluzione del problema strutturale nonché le metodologie seguite per la verifica o per il progetto-verifica delle sezioni. Si riportano le combinazioni di carico adottate e, nel caso di calcoli non lineari, i percorsi di carico seguiti; le configurazioni studiate per la struttura in esame *sono risultate effettivamente esaustive per la progettazione-verifica.*

La verifica della sicurezza degli elementi strutturali avviene con i metodi della scienza delle costruzioni. L'analisi strutturale è condotta con il metodo degli spostamenti per la valutazione dello stato tensodeformativo indotto da carichi statici. L'analisi strutturale è condotta con il metodo dell'analisi modale e dello spettro di risposta in termini di accelerazione per la valutazione dello stato tensodeformativo indotto da carichi dinamici (tra cui quelli di tipo sismico).

L'analisi strutturale viene effettuata con il metodo degli elementi finiti. Il metodo sopraindicato si basa sulla schematizzazione della struttura in elementi connessi solo in corrispondenza di un numero prefissato di punti denominati nodi. I nodi sono definiti dalle tre coordinate cartesiane in un sistema di riferimento globale. Le incognite del problema (nell'ambito del metodo degli spostamenti) sono le componenti di spostamento dei nodi riferite al sistema di riferimento globale (traslazioni secondo X, Y, Z, rotazioni attorno X, Y, Z). La soluzione del problema si ottiene con un sistema di equazioni algebriche lineari i cui termini noti sono costituiti dai carichi agenti sulla struttura opportunamente concentrati ai nodi:

K * u = F dove **K** = matrice di rigidezza

u = vettore spostamenti nodali

F = vettore forze nodali

Dagli spostamenti ottenuti con la risoluzione del sistema vengono quindi dedotte le sollecitazioni e/o le tensioni di ogni elemento, riferite generalmente ad una terna locale all'elemento stesso.

Il sistema di riferimento utilizzato è costituito da una terna cartesiana destrorsa XYZ. Si assume l'asse Z verticale ed orientato verso l'alto.

Gli elementi utilizzati per la modellazione dello schema statico della struttura sono i seguenti:

Elemento tipo ***TRUSS***	(biella-D2)
Elemento tipo ***BEAM***	(trave-D2)
Elemento tipo ***MEMBRANE***	(membrana-D3)
Elemento tipo ***PLATE***	(piastra-guscio-D3)
Elemento tipo ***BOUNDARY***	(molla)
Elemento tipo ***STIFFNESS***	(matrice di rigidezza)
Elemento tipo ***BRICK***	(elemento solido)
Elemento tipo ***SOLAIO***	(macro elemento composto da più membrane)

12.5 Modello numerico

In questa parte viene descritto il modello numerico utilizzato (o i modelli numerici utilizzati) per l'analisi della struttura. La presentazione delle informazioni deve essere, coerentemente con le prescrizioni del paragrafo 10.2 e relativi sottoparagrafi delle NTC-18, tale da garantirne la leggibilità, la corretta interpretazione e la riproducibilità

Completare

Tipo di analisi strutturale	
Sismica statica lineare	NO
Sismica dinamica lineare	SI
Sismica statica non lineare (prop. masse)	NO
Sismica statica non lineare (prop. modo)	NO
Sismica statica non lineare (triangolare)	NO
Non linearità geometriche (fattore P delta)	NO
Analisi lineare	SI

Di seguito si indicano l'origine e le caratteristiche dei codici di calcolo utilizzati riportando titolo, produttore e distributore, versione, estremi della licenza d'uso:

12.5.1 Informazioni sul codice di calcolo

Titolo:	PRO_SAP PROfessional Structural Analysis Program
Versione:	PROFESSIONAL (build 2021-05-192)
Produttore-Distributore:	2S.I. Software e Servizi per l'Ingegneria s.r.l., Ferrara

Dati utente finale:	******* COMPLETARE *******
Codice Utente:	******* COMPLETARE *******
Codice Licenza:	Licenza dsi3728

Un attento esame preliminare della documentazione a corredo del software ***ha consentito di valutarne l'affidabilità e soprattutto l'idoneità al caso specifico***. La documentazione, fornita dal produttore e distributore del software, contiene una esauriente descrizione delle basi teoriche e degli algoritmi impiegati, l'individuazione dei campi d'impiego, nonché casi prova interamente risolti e commentati, corredati dei file di input necessari a riprodurre l'elaborazione:

Affidabilità dei codici utilizzati
2S.I. ha verificato l'affidabilità e la robustezza del codice di calcolo attraverso un numero significativo di casi prova in cui i risultati dell'analisi numerica sono stati confrontati con soluzioni teoriche. E' possibile reperire la documentazione contenente alcuni dei più significativi casi trattati al seguente link: https://www.2si.it/it/prodotti/affidabilita/

Modellazione della geometria e proprietà meccaniche:	
nodi	252
elementi D2 (per aste, travi, pilastri…)	205
elementi D3 (per pareti, platee, gusci…)	120
elementi solaio	0
elementi solidi	0
Dimensione del modello strutturale [cm]:	
X min =	-35.00
Xmax =	365.00
Ymin =	0.00
Ymax =	1200.00
Zmin =	100.00
Zmax =	105.00
Strutture verticali:	
Elementi di tipo asta	NO
Pilastri	SI
Pareti	NO
Setti (a comportamento membranale)	NO
Strutture non verticali:	
Elementi di tipo asta	NO
Travi	SI
Gusci	SI
Membrane	NO

Orizzontamenti:	
Solai con la proprietà piano rigido	NO
Solai senza la proprietà piano rigido	NO
Tipo di vincoli:	
Nodi vincolati rigidamente	SI
Nodi vincolati elasticamente	NO
Nodi con isolatori sismici	NO
Fondazioni puntuali (plinti/plinti su palo)	NO
Fondazioni di tipo trave	NO
Fondazioni di tipo platea	NO
Fondazioni con elementi solidi	NO

12.6 Modellazione delle azioni

Si veda il capitolo **"Schematizzazione dei casi di carico"** per le informazioni necessarie alla comprensione ed alla ricostruzione delle azioni applicate al modello numerico, coerentemente con quanto indicato nella parte "*2.6. Azioni di progetto sulla costruzione*".

12.7 Combinazioni e/o percorsi di carico

Si veda il capitolo **"Definizione delle combinazioni"** in cui sono indicate le combinazioni di carico adottate e, nel caso di calcoli non lineari, i percorsi di carico seguiti.

Combinazioni dei casi di carico	
APPROCCIO PROGETTUALE	Approccio 2
Tensioni ammissibili	NO
SLU	SI
SLV (SLU con sisma)	SI
SLC	NO
SLD	SI
SLO	NO
SLU GEO A2 (per approccio 1)	NO
SLU EQU	NO
Combinazione caratteristica (rara)	SI
Combinazione frequente	SI
Combinazione quasi permanente (SLE)	SI
SLA (accidentale quale incendio)	SI

Principali risultati

I risultati devono costituire una sintesi completa ed efficace, presentata in modo da riassumere il comportamento della struttura, per ogni tipo di analisi svolta.

Nella presente relazione di calcolo sono riportati i seguenti risultati che il progettista ritiene di interesse per la descrizione e la compresione del/i modello/i e del comportamento della struttura:

per l'analisi modale:

- periodi dei modi di vibrare della struttura
- masse eccitate dai singoli modi
- massa eccitata totale

deformate e sollecitazioni:

- spostamenti e rotazioni dei singoli nodi della struttura
- reazioni vincolari (nel caso siano presenti nodi vincolati rigidamente)
- pressioni sul terreno (nel caso siano presenti elementi di fondazione)
- sollecitazioni sugli elementi d2 nelle combinazioni di calcolo più significative
- tensioni sugli elementi d3 nelle combinazioni di calcolo più significative
- sollecitazioni sui macroelementi da elementi d3 nelle combinazioni di calcolo più significative

altri risultati significativi:

- *Completare*

La presente relazione, oltre ad illustrare in modo esaustivo i dati in ingresso ed i risultati delle analisi in forma tabellare, riporta una serie di immagini:

per i dati in ingresso:

- modello solido della struttura
- numerazione di nodi e ed elementi
- configurazioni di carico statiche
- configurazioni di carico sismiche con baricentri delle masse e eccentricità

per le combinazioni più significative (statisticamente più gravose per la struttura):

- configurazioni deformate
- diagrammi e inviluppi delle azioni interne
- mappe delle tensioni
- reazioni vincolari
- mappe delle pressioni sul terreno

per il progetto-verifica degli elementi:

- diagrammi di armatura
- percentuali di sfruttamento

- mappe delle verifiche più significative per i vari stati limite

Informazioni generali sull'elaborazione e giudizio motivato di accettabilità dei risultati.

Il programma prevede una serie di controlli automatici (check) che consentono l'individuazione di errori di modellazione. Al termine dell'analisi un controllo automatico identifica la presenza di spostamenti o rotazioni abnormi. Si può pertanto asserire che l' elaborazione sia corretta e completa. I risultati delle elaborazioni sono stati sottoposti a controlli che ne comprovano l'attendibilità. Tale valutazione ha compreso il confronto con i risultati di semplici calcoli, eseguiti con metodi tradizionali e adottati, anche in fase di primo proporzionamento della struttura. Inoltre, sulla base di considerazioni riguardanti gli stati tensionali e deformativi determinati, si è valutata la validità delle scelte operate in sede di schematizzazione e di modellazione della struttura e delle azioni. Si allega al termine della presente relazione elenco sintetico dei controlli svolti (verifiche di equilibrio tra reazioni vincolari e carichi applicati, comparazioni tra i risultati delle analisi e quelli di valutazioni semplificate, etc.) .

Completare

12.8 Verifiche agli stati limite ultimi

Nel capitolo relativo alla progettazione degli elementi strutturali agli SLU vengono indicate, con riferimento alla normativa adottata, le modalità ed i criteri seguiti per valutare la sicurezza della struttura nei confronti delle possibili situazioni di crisi ed i risultati delle valutazioni svolte. In via generale, oltre alle verifiche di resistenza e di spostamento, devono essere prese in considerazione verifiche nei confronti dei fenomeni di instabilità, locale e globale, di fatica, di duttilità, di degrado.

12.9 Verifiche agli stati limite di esercizio

Nel capitolo relativo alla progettazione degli elementi strutturali agli SLE vengono indicate, con riferimento alla normativa adottata, le modalità seguite per valutare l'affidabilità della struttura nei confronti delle possibili situazioni di perdita di funzionalità (per eccessive deformazioni, fessurazioni, vibrazioni, etc.) ed i risultati delle valutazioni svolte.

12.10 RELAZIONE SUI MATERIALI

Il capitolo Materiali riportata informazioni esaustive relative all'elenco dei materiali impiegati e loro modalità di posa in opera e ai valori di calcolo.

13 NORMATIVA DI RIFERIMENTO

1. D.Min. Infrastrutture Min. Interni e Prot. Civile 17 Gennaio 2018 e allegate "Norme tecniche per le costruzioni".
2. Circolare 21/01/19, n. 7 C.S.LL.PP "Istruzioni per l'applicazione dell'aggiornamento delle Norme Tecniche delle Costruzioni di cui al decreto ministeriale 17 gennaio 2018"
3. D.Min. Infrastrutture e trasporti 14 Settembre 2005 e allegate "Norme tecniche per le costruzioni".
4. D.M. LL.PP. 9 Gennaio 1996 "Norme tecniche per il calcolo, l'esecuzione ed il collaudo delle strutture in cemento armato, normale e precompresso e per le strutture metalliche".
5. D.M. LL.PP. 16 Gennaio 1996 "Norme tecniche relative ai <<Criteri generali per la verifica di sicurezza delle costruzioni e dei carichi e sovraccarichi>>".
6. D.M. LL.PP. 16 Gennaio 1996 "Norme tecniche per le costruzioni in zone sismiche".
7. Circolare 4/07/96, n.156AA.GG./STC. istruzioni per l'applicazione delle "Norme tecniche relative ai <<Criteri generali per la verifica di sicurezza delle costruzioni e dei carichi e sovraccarichi>>" di cui al D.M. 16/01/96.
8. Circolare 10/04/97, n.65AA.GG. istruzioni per l'applicazione delle "Norme tecniche per le costruzioni in zone sismiche" di cui al D.M. 16/01/96.
9. D.M. LL.PP. 20 Novembre 1987 "Norme tecniche per la progettazione, esecuzione e collaudo degli edifici in muratura e per il loro consolidamento".
10. Circolare 4 Gennaio 1989 n. 30787 "Istruzioni in merito alle norme tecniche per la progettazione, esecuzione e collaudo degli edifici in muratura e per il loro consolidamento".
11. D.M. LL.PP. 11 Marzo 1988 "Norme tecniche riguardanti le indagini sui terreni e sulle rocce, la stabilità dei pendii naturali e delle scarpate, i criteri generali e le prescrizioni per la progettazione, l'esecuzione e il collaudo delle opere di sostegno delle terre e delle opere di fondazione".
12. D.M. LL.PP. 3 Dicembre 1987 "Norme tecniche per la progettazione, esecuzione e collaudo delle costruzioni prefabbricate".
13. UNI 9502 - Procedimento analitico per valutare la resistenza al fuoco degli elementi costruttivi di conglomerato cementizio armato, normale e precompresso - edizione maggio 2001
14. Ordinanza del Presidente del Consiglio dei Ministri n. 3274 del 20 marzo 2003 "Primi elementi in materia di criteri generali per la classificazione sismica del territorio nazionale e di normative tecniche per le costruzioni in zona sismica" e successive modificazioni e integrazioni.
15. UNI EN 1990:2006 13/04/2006 Eurocodice 0 - Criteri generali di progettazione strutturale.
16. UNI EN 1991-1-1:2004 01/08/2004 Eurocodice 1 - Azioni sulle strutture - Parte 1-1: Azioni in generale - Pesi per unità di volume, pesi propri e sovraccarichi per gli edifici.
17. UNI EN 1991-2:2005 01/03/2005 Eurocodice 1 - Azioni sulle strutture - Parte 2: Carichi da traffico sui ponti.
18. UNI EN 1991-1-3:2004 01/10/2004 Eurocodice 1 - Azioni sulle strutture - Parte 1-3: Azioni in generale - Carichi da neve.
19. UNI EN 1991-1-4:2005 01/07/2005 Eurocodice 1 - Azioni sulle strutture - Parte 1-4: Azioni in generale - Azioni del vento.
20. UNI EN 1991-1-5:2004 01/10/2004 Eurocodice 1 - Azioni sulle strutture - Parte 1-5: Azioni in generale - Azioni termiche.
21. UNI EN 1992-1-1:2005 24/11/2005 Eurocodice 2 - Progettazione delle strutture di calcestruzzo - Parte 1-1: Regole generali e regole per gli edifici.
22. UNI EN 1992-1-2:2005 01/04/2005 Eurocodice 2 - Progettazione delle strutture di calcestruzzo - Parte 1-2: Regole generali - Progettazione strutturale contro l'incendio.
23. UNI EN 1993-1-1:2005 01/08/2005 Eurocodice 3 - Progettazione delle strutture di acciaio - Parte 1-1: Regole generali e regole per gli edifici.
24. UNI EN 1993-1-8:2005 01/08/2005 Eurocodice 3 - Progettazione delle strutture di acciaio - Parte 1-8: Progettazione dei collegamenti.
25. UNI EN 1994-1-1:2005 01/03/2005 Eurocodice 4 - Progettazione delle strutture composte acciaio-calcestruzzo - Parte 1-1: Regole generali e regole per gli edifici.
26. UNI EN 1994-2:2006 12/01/2006 Eurocodice 4 - Progettazione delle strutture composte acciaio-calcestruzzo - Parte 2: Regole generali e regole per i ponti.
27. UNI EN 1995-1-1:2005 01/02/2005 Eurocodice 5 - Progettazione delle strutture di legno - Parte 1-1: Regole generali – Regole comuni e regole per gli edifici.
28. UNI EN 1995-2:2005 01/01/2005 Eurocodice 5 - Progettazione delle strutture di legno - Parte 2: Ponti.
29. UNI EN 1996-1-1:2006 26/01/2006 Eurocodice 6 - Progettazione delle strutture di muratura - Parte 1-1: Regole generali per strutture di muratura armata e non armata.
30. UNI EN 1996-3:2006 09/03/2006 Eurocodice 6 - Progettazione delle strutture di muratura - Parte 3: Metodi di calcolo semplificato per strutture di muratura non armata.
31. UNI EN 1997-1:2005 01/02/2005 Eurocodice 7 - Progettazione geotecnica - Parte 1: Regole generali.
32. UNI EN 1998-1:2005 01/03/2005 Eurocodice 8 - Progettazione delle strutture per la resistenza sismica - Parte 1: Regole generali, azioni sismiche e regole per gli edifici.
33. UNI EN 1998-3:2005 01/08/2005 Eurocodice 8 - Progettazione delle strutture per la resistenza sismica - Parte 3: Valutazione e adeguamento degli edifici.
34. UNI EN 1998-5:2005 01/01/2005 Eurocodice 8 - Progettazione delle strutture per la resistenza sismica - Parte 5: Fondazioni, strutture di contenimento ed aspetti geotecnici.

NOTA il capitolo "normativa di riferimento": riporta l' elenco delle normative implementate nel software. Le norme utilizzate per la struttura oggetto della presente relazione sono indicate nel precedente capitolo "RELAZIONE DI CALCOLO STRUTTURALE" "ANALISI E VERIFICHE SVOLTE CON L'AUSILIO DI CODICI DI CALCOLO". Laddove nei capitoli successivi vengano richiamate norme antecedenti al DM 17.01.18 è dovuto o a progettazione simulata di edifico esistente.

14 CARATTERISTICHE MATERIALI UTILIZZATI

14.1 LEGENDA TABELLA DATI MATERIALI

Il programma consente l'uso di materiali diversi. Sono previsti i seguenti tipi di materiale:

1	materiale tipo cemento armato
2	materiale tipo acciaio
3	materiale tipo muratura
4	materiale tipo legno
5	materiale tipo generico

I materiali utilizzati nella modellazione sono individuati da una sigla identificativa ed un codice numerico (gli elementi strutturali richiamano quest'ultimo nella propria descrizione). Per ogni materiale vengono riportati in tabella i seguenti dati:

Young	modulo di elasticità normale E
Poisson	coefficiente di contrazione trasversale ni
G	modulo di elasticità tangenziale
Gamma	peso specifico
Alfa	coefficiente di dilatazione termica
Fattore di confidenza FC m	Fattore di confidenza specifico per materiale; (è riportato solo se diverso da quello globale della struttura)
Fattore di confidenza FC a	Fattore di confidenza specifico per l'armatura (è riportato solo se diverso da quello globale della struttura)
Elasto-plastico	Materiale elastico perfettamente plastico per aste non lineari
Massima compressione	Massima tensione di compressione per aste non lineari
Massima trazione	Massima tensione di trazione per aste non lineari
Fattore attrito	Coefficinete di attrito per aste non lineari
Rapporto HRDb	Rapporto di hardening a flessione
Rapporto HRDv	Rapporto di hardening a taglio

I dati sopraripportati vengono utilizzati per la modellazione dello schema statico e per la determinazione dei carichi inerziali e termici. In relazione al tipo di materiale vengono riportati inoltre:

1	c.a.		
		Resistenza Rc	resistenza a cmpressione cubica
		Resistenza fctm	resistenza media a trazione semplice
		Coefficiente ksb	Coefficiente di riduzione della resistenza a compressione da utilizzare nello stress block
2	acciaio		
		Tensione ft	Valore della tensione di rottura
		Tensione fy	Valore della tensione di snervamento
		Resistenza fd	Resistenza di calcolo per SL CNR-UNI 10011
		Resistenza fd (>40)	Resistenza di calcolo per SL CNR-UNI 10011 per spessori > 40mm
		Tensione ammissibile	Tensione ammissibile CNR-UNI 10011
		Tensione ammissibile(>40)	Tensione ammissibile CNR-UNI 10011 per spessori > 40mm
3	muratura		
		Muratura consolidata	Muratura per la quale si prevedono interventi di rinforzo"
		Incremento resistenza	Incremento conseguito in termini di resistenza
		Incremento rigidezza	Incremento conseguito in termini di rigidezza
		Resistenza f	Valore della resistenza a compressione
		Resistenza fv0	Valore della resistenza a taglio in assenza di tensioni normali
		Resistenza fh	Valore della resistenza a compressione orizzontale
		Resistenza fb	Valore della resistenza a compressione dei blocchi
		Resistenza fbh	Valore della resistenza a compressione dei blocchi in direzione orizzontale
		Resistenza fv0h	Valore della resistenza a taglio in assenza di tensioni normali per le travi
		Resistenza ft	Valore della resistenza a trazione per fessurazione diagonale
		Resistenza fvlim	Valore della massima resistenza a taglio
		Resistenza fbt	Valore della resistenza a trazione dei blocchi
		Coefficiente mu	Coefficiente d'attrito utilizzato per la resistenza a taglio (tipicamente 0.4)
		Coefficiente fi	Coefficiente d'ingranamento utilizzato per la resistenza a taglio
		Coefficiente ksb	Coefficiente di riduzione della resistenza a compressione da utilizzare nello stress block
4	legno		
		E0,05	Modulo di elasticità corrispondente ad un frattile del 5%
		Resistenza fc0	Valore della resistenza a compressione parallela
		Resistenza ft0	Valore della resistenza a trazione parallela
		Resistenza fm	Valore della resistenza a flessione
		Resistenza fv	Valore della resistenza a taglio
		Resist. ft0k	Resistenza caratteristica (tensione amm. per REGLES) per trazione
		Resist. fmk	Resistenza caratteristica (tensione amm. per REGLES) per flessione
		Resist. fvk	Resistenza caratteristica (tensione amm. per REGLES) per taglio
		Modulo E0,05	Modulo elastico parallelo caratteristico

Lamellare	lamellare o massiccio

Nel tabulato si riportano sia i valori caratteristici che medi utilizzando gli uni e/o gli altri in relazione alle richieste di normativa ed alla tipologia di verifica. (Cap.7 NTC18 per materiali nuovi, Cap.8 NTC18 e relativa circolare 21/01/2019 per materiali esistenti, Linee Guida Reluis per incamiciatura CAM, CNR-DT 200 per interventi con FRP)

Vengono inoltre riportate le tabelle contenenti il riassunto delle informazioni assegnate nei criteri di progetto in uso.

Id	Tipo / Note	V. caratt.	V. medio	Young	Poisson	G	Gamma	Alfa	Altri
		daN/cm2	daN/cm2	daN/cm2		daN/cm2	daN/cm3		
6	Calcestruzzo Classe C35/45			3.463e+05	0.20	1.443e+05	2.50e-03	1.00e-05	
	Resistenza Rc	450.0							
	Resistenza fctm		33.5						
	Rapporto Rfessurata								1.00
	Coefficiente ksb								0.85
	Rapporto HRDb								1.00e-05
	Rapporto HRDv								1.00e-05
157	Materiale inf. rigido no peso E = 1.000e+09			1.000e+09	0.0	5.000e+08	0.0	1.20e-05	
	Rapporto HRDb								1.00e-05
	Rapporto HRDv								1.00e-05

Gusci c.a.	1/7/..	2/8/..	3/9/..	4/10/..	5/11/..	6/12/..
Armatura						
Inclinazione Ax [gradi]	0.0					
Angolo Ax-Ay [gradi]	90.00					
Minima tesa	0.31					
Massima tesa	0.78					
Maglia unica centrale	NO					
Copriferro [cm]	2.00					
Maglia x						
diametro	16					
passo	10					
diametro aggiuntivi	16					
Maglia y						
diametro	16					
passo	10					
diametro aggiuntivi	16					
Stati limite ultimi						
Tensione fy [daN/cm2]	4500.00					
Tipo acciaio	tipo C					
Coefficiente gamma s	1.15					
Coefficiente gamma c	1.50					
Verifiche con N costante	SI					
Applica SLU da DIN	NO					
Tensioni ammissibili						
Tensione amm. cls [daN/cm2]	97.50					
Tensione amm. acciaio [daN/cm2]	2600.00					
Rapporto omogeneizzazione N	15.00					
Massimo rapporto area compressa/tesa	1.00					
Resistenza al fuoco						
3- intradosso	NO					
3+ estradosso	NO					
Tempo di esposizione R	15					

Travi c.a.	1/7/..	2/8/..	3/9/..	4/10/..	5/11/..	6/12/..
Generalità						
Progetta a filo	NO					
Af inf: da q*L*L /	0.0					
Armatura						
Minima tesa	0.31					
Minima compressa	0.31					
Massima tesa	4.00					
Da sezione	SI					
Usa armatura teorica	NO					
Stati limite ultimi						
Tensione fy [daN/cm2]	4500.00					
Tensione fy staffe [daN/cm2]	4500.00					
Tipo acciaio	tipo C					

Travi c.a.	**1/7/..**	**2/8/..**	**3/9/..**	**4/10/..**	**5/11/..**	**6/12/..**
Coefficiente gamma s	1.15					
Coefficiente gamma c	1.50					
Verifiche con N costante	SI					
Fattore di ridistribuzione	0.0					
Modello per il confinamento						
Relazione tensio-deformativa	Mander					
Incrudimento acciaio	5.000e-03					
Fattore lambda	1.00					
epsilon max,s	4.000e-02					
epsilon cu2	4.500e-03					
epsilon c2	0.0					
epsilon cy	0.0					
Tensioni ammissibili						
Tensione amm. cls [daN/cm2]	97.50					
Tensione amm. acciaio [daN/cm2]	2600.00					
Rapporto omogeneizzazione N	15.00					
Massimo rapporto area compressa/tesa	1.00					
Staffe						
Diametro staffe	0.0					
Passo minimo [cm]	4.00					
Passo massimo [cm]	30.00					
Passo raffittito [cm]	15.00					
Lunghezza zona raffittita [cm]	50.00					
Ctg(Teta) Max	2.50					
Percentuale sagomati	0.0					
Luce di taglio per GR [cm]	1.00					
Adotta scorrimento medio	NO					
Torsione non essenziale inclusa	SI					

15 MODELLAZIONE DELLE SEZIONI

15.1 LEGENDA TABELLA DATI SEZIONI

Il programma consente l'uso di sezioni diverse. Sono previsti i seguenti tipi di sezione:

4. sezione di tipo generico
5. profilati semplici
6. profilati accoppiati e speciali

Le sezioni utilizzate nella modellazione sono individuate da una sigla identificativa ed un codice numerico (gli elementi strutturali richiamano quest'ultimo nella propria descrizione). Per ogni sezione vengono riportati in tabella i seguenti dati:

Area	area della sezione
A V2	area della sezione/fattore di taglio (per il taglio in direzione 2)
A V3	area della sezione/fattore di taglio (per il taglio in direzione 3)
Jt	fattore torsionale di rigidezza
J2-2	momento d'inerzia della sezione riferito all'asse 2
J3-3	momento d'inerzia della sezione riferito all'asse 3
W2-2	modulo di resistenza della sezione riferito all'asse 2
W3-3	modulo di resistenza della sezione riferito all'asse 3
Wp2-2	modulo di resistenza plastico della sezione riferito all'asse 2
Wp3-3	modulo di resistenza plastico della sezione riferito all'asse 3

I dati sopra riportati vengono utilizzati per la determinazione dei carichi inerziali e per la definizione delle rigidezze degli elementi strutturali; qualora il valore di Area V2 (e/o Area V3) sia nullo la deformabilità per taglio V2 (e/o V3) è trascurata. La valutazione delle caratteristiche inerziali delle sezioni è condotta nel riferimento 2-3 dell'elemento.

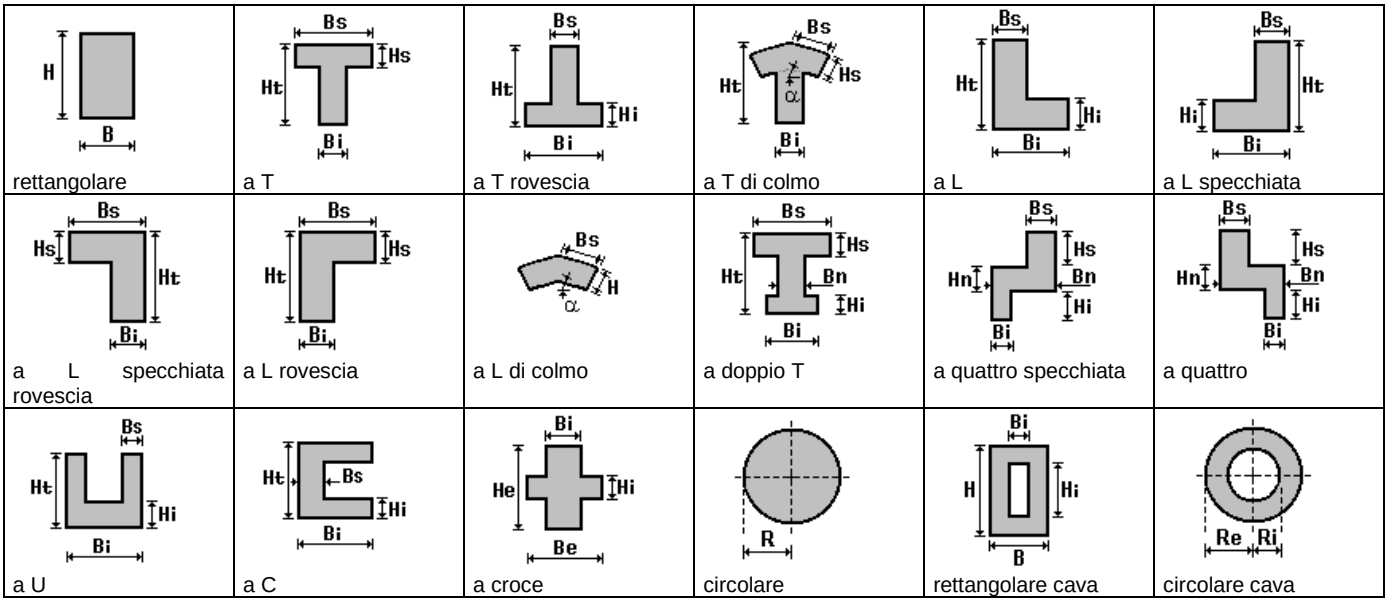

Per quanto concerne i profilati semplici ed accoppiati l'asse 2 del riferimento coincide con l'asse x riportato nei più diffusi profilatari.

Per quanto concerne le sezioni di tipo generico (tipo 1.):
i valori dimensionali con prefisso B sono riferiti all'asse 2
i valori dimensionali con prefisso H sono riferiti all'asse 3

Id	Tipo	Area	A V2	A V3	Jt	J 2-2	J 3-3	W 2-2	W 3-3	Wp 2-2	Wp 3-3
		cm2	cm2	cm2	cm4	cm4	cm4	cm3	cm3	cm3	cm3
1	Rettangolare: b=70 h=40	2800.00	2333.33	2333.33	9.557e+05	1.143e+06	3.733e+05	3.267e+04	1.867e+04	4.900e+04	2.800e+04
2	Circolare: r=2	12.57	10.60	10.60	25.13	12.57	12.57	6.28	6.28	10.67	10.67

16 MODELLAZIONE STRUTTURA: ELEMENTI TRAVE

16.1 TABELLA DATI TRAVI

Il programma utilizza per la modellazione elementi a due nodi denominati in generale travi.
Ogni elemento trave è individuato dal nodo iniziale e dal nodo finale.
Ogni elemento è caratterizzato da un insieme di proprietà riportate in tabella che ne completano la modellazione.

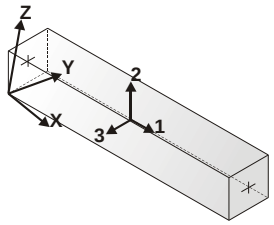

orientamento elementi 2D non verticali

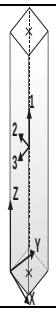

orientamento elementi 2D verticali

In particolare per ogni elemento viene indicato in tabella:

Elem.	numero dell'elemento
Note	codice di comportamento: trave, trave di fondazione, pilastro, asta, asta tesa, asta compressa,
Nodo I (J)	numero del nodo iniziale (finale)
Mat.	codice del materiale assegnato all'elemento
Sez.	codice della sezione assegnata all'elemento
Rotaz.	valore della rotazione dell'elemento, attorno al proprio asse, nel caso in cui l'orientamento di default non sia adottabile; l'orientamento di default prevede per gli elementi non verticali l'asse 2 contenuto nel piano verticale e l'asse 3 orizzontale, per gli elementi verticali l'asse 2 diretto secondo X negativo e l'asse 3 diretto secondo Y negativo
Svincolo I (J)	codici di svincolo per le azioni interne; i primi sei codici si riferiscono al nodo iniziale, i restanti sei al nodo finale (il valore 1 indica che la relativa azione interna non è attiva)
Wink V	costante di sottofondo (coefficiente di Winkler) per la modellazione della trave su suolo elastico
Wink O	costante di sottofondo (coefficiente di Winkler) per la modellazione del suolo elastico orizzontale

Elem.	Note	Nodo I	Nodo J	Mat.	Sez.	Crit.	Rotaz.	Svincolo I	Svincolo J	Wink V	Wink O
							gradi			daN/cm3	daN/cm3
1	Trave	1	3	6	1	1					
2	Trave	3	4	6	1	1					
3	Trave	4	5	6	1	1					
4	Trave	5	6	6	1	1					
5	Trave	6	7	6	1	1					
6	Trave	7	8	6	1	1					
7	Trave	8	9	6	1	1					
8	Trave	9	10	6	1	1					
9	Trave	10	11	6	1	1					
10	Trave	11	12	6	1	1					
11	Trave	12	13	6	1	1					
12	Trave	13	14	6	1	1					
13	Trave	14	15	6	1	1					
14	Trave	15	16	6	1	1					
15	Trave	16	17	6	1	1					
16	Trave	17	18	6	1	1					
17	Trave	18	19	6	1	1					
18	Trave	19	20	6	1	1					
19	Trave	20	21	6	1	1					
20	Trave	21	2	6	1	1					
21	Trave	22	24	6	1	1					
22	Trave	24	25	6	1	1					
23	Trave	25	26	6	1	1					
24	Trave	26	27	6	1	1					
25	Trave	27	28	6	1	1					
26	Trave	28	29	6	1	1					
27	Trave	29	30	6	1	1					
28	Trave	30	31	6	1	1					
29	Trave	31	32	6	1	1					
30	Trave	32	33	6	1	1					
31	Trave	33	34	6	1	1					
32	Trave	34	35	6	1	1					
33	Trave	35	36	6	1	1					
34	Trave	36	37	6	1	1					
35	Trave	37	38	6	1	1					
36	Trave	38	39	6	1	1					
37	Trave	39	40	6	1	1					
38	Trave	40	41	6	1	1					
39	Trave	41	42	6	1	1					
40	Trave	42	23	6	1	1					
83	Trave	85	87	6	1	1					
84	Trave	87	88	6	1	1					
85	Trave	88	89	6	1	1					
86	Trave	89	90	6	1	1					
87	Trave	90	91	6	1	1					
88	Trave	91	92	6	1	1					
89	Trave	92	93	6	1	1					
90	Trave	93	94	6	1	1					
91	Trave	94	95	6	1	1					
92	Trave	95	96	6	1	1					
93	Trave	96	97	6	1	1					
94	Trave	97	98	6	1	1					
95	Trave	98	99	6	1	1					
96	Trave	99	100	6	1	1					
97	Trave	100	101	6	1	1					
98	Trave	101	102	6	1	1					
99	Trave	102	103	6	1	1					
100	Trave	103	104	6	1	1					
101	Trave	104	105	6	1	1					
102	Trave	105	86	6	1	1					
124	Trave	127	129	6	1	1					
125	Trave	129	130	6	1	1					
126	Trave	130	131	6	1	1					
127	Trave	131	132	6	1	1					
128	Trave	132	133	6	1	1					
129	Trave	133	134	6	1	1					
130	Trave	134	135	6	1	1					
131	Trave	135	136	6	1	1					
132	Trave	136	137	6	1	1					
133	Trave	137	138	6	1	1					
134	Trave	138	139	6	1	1					
135	Trave	139	140	6	1	1					

Elem.	Note	Nodo I	Nodo J	Mat.	Sez.	Crit.	Rotaz.	Svincolo I	Svincolo J	Wink V	Wink O
136	Trave	140	141	6	1	1					
137	Trave	141	142	6	1	1					
138	Trave	142	143	6	1	1					
139	Trave	143	144	6	1	1					
140	Trave	144	145	6	1	1					
141	Trave	145	146	6	1	1					
142	Trave	146	147	6	1	1					
143	Trave	147	128	6	1	1					
165	Trave	169	171	6	1	1					
166	Trave	171	172	6	1	1					
167	Trave	172	173	6	1	1					
168	Trave	173	174	6	1	1					
169	Trave	174	175	6	1	1					
170	Trave	175	176	6	1	1					
171	Trave	176	177	6	1	1					
172	Trave	177	178	6	1	1					
173	Trave	178	179	6	1	1					
174	Trave	179	180	6	1	1					
175	Trave	180	181	6	1	1					
176	Trave	181	182	6	1	1					
177	Trave	182	183	6	1	1					
178	Trave	183	184	6	1	1					
179	Trave	184	185	6	1	1					
180	Trave	185	186	6	1	1					
181	Trave	186	187	6	1	1					
182	Trave	187	188	6	1	1					
183	Trave	188	189	6	1	1					
184	Trave	189	170	6	1	1					

17 MODELLAZIONE STRUTTURA: ELEMENTI SHELL

17.1 LEGENDA TABELLA DATI SHELL

Il programma utilizza per la modellazione elementi a tre o quattro nodi denominati in generale shell.
Ogni elemento shell è individuato dai nodi I, J, K, L (L=I per gli elementi a tre nodi).
Ogni elemento è caratterizzato da un insieme di proprietà riportate in tabella che ne completano la modellazione.

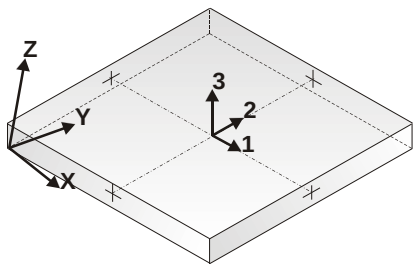

orientamento elementi 3D non verticali

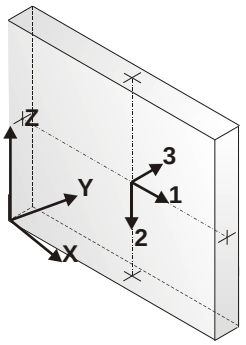

orientamento elementi 3D verticali

In particolare per ogni elemento viene indicato in tabella:

Elem.	numero dell'elemento
Note	codice di comportamento: *Guscio* (elemento guscio in elevazione non verticale) *Guscio fond.* (elemento guscio su suolo elastico) *Setto* (elemento guscio in elevazione verticale) *Membrana* (elemento guscio con comportamento membranale)
Nodo I (J, K, L)	numero del nodo I (J, K, L)
Mat.	codice del materiale assegnato all'elemento
Spessore	spessore dell'elemento (costante)
Wink V	costante di sottofondo (coefficiente di Winkler) per la modellazione del suolo elastico verticale
Wink O	costante di sottofondo (coefficiente di Winkler) per la modellazione del suolo elastico orizzontale

Elem.	Note	Nodo I	Nodo J	Nodo K	Nodo L	Mat.	Crit.	Spessore	Svincolo	Wink V	Wink O
								cm		daN/cm3	daN/cm3
1	Guscio	45	46	44	43	6	1	20.0			
2	Guscio	47	48	46	45	6	1	20.0			
3	Guscio	55	56	48	47	6	1	20.0			
4	Guscio	63	64	56	55	6	1	20.0			
5	Guscio	71	72	64	63	6	1	20.0			
6	Guscio	79	80	72	71	6	1	20.0			
7	Guscio	51	52	80	79	6	1	20.0			
8	Guscio	61	62	52	51	6	1	20.0			
9	Guscio	73	74	62	61	6	1	20.0			
10	Guscio	83	84	74	73	6	1	20.0			
11	Guscio	59	60	84	83	6	1	20.0			
12	Guscio	75	76	60	59	6	1	20.0			
13	Guscio	53	54	76	75	6	1	20.0			
14	Guscio	69	70	54	53	6	1	20.0			
15	Guscio	57	58	70	69	6	1	20.0			
16	Guscio	81	82	58	57	6	1	20.0			
17	Guscio	77	78	82	81	6	1	20.0			
18	Guscio	49	50	78	77	6	1	20.0			
19	Guscio	67	68	50	49	6	1	20.0			
20	Guscio	66	65	68	67	6	1	20.0			
21	Guscio	46	107	106	44	6	1	20.0			
22	Guscio	48	108	107	46	6	1	20.0			
23	Guscio	56	112	108	48	6	1	20.0			
24	Guscio	64	116	112	56	6	1	20.0			
25	Guscio	72	120	116	64	6	1	20.0			
26	Guscio	80	124	120	72	6	1	20.0			
27	Guscio	52	110	124	80	6	1	20.0			
28	Guscio	62	115	110	52	6	1	20.0			
29	Guscio	74	121	115	62	6	1	20.0			
30	Guscio	84	126	121	74	6	1	20.0			
31	Guscio	60	114	126	84	6	1	20.0			
32	Guscio	76	122	114	60	6	1	20.0			
33	Guscio	54	111	122	76	6	1	20.0			
34	Guscio	70	119	111	54	6	1	20.0			
35	Guscio	58	113	119	70	6	1	20.0			
36	Guscio	82	125	113	58	6	1	20.0			
37	Guscio	78	123	125	82	6	1	20.0			
38	Guscio	50	109	123	78	6	1	20.0			
39	Guscio	68	118	109	50	6	1	20.0			
40	Guscio	65	117	118	68	6	1	20.0			
41	Guscio	107	149	148	106	6	1	20.0			
42	Guscio	108	150	149	107	6	1	20.0			
43	Guscio	112	154	150	108	6	1	20.0			
44	Guscio	116	158	154	112	6	1	20.0			
45	Guscio	120	162	158	116	6	1	20.0			
46	Guscio	124	166	162	120	6	1	20.0			
47	Guscio	110	152	166	124	6	1	20.0			
48	Guscio	115	157	152	110	6	1	20.0			
49	Guscio	121	163	157	115	6	1	20.0			
50	Guscio	126	168	163	121	6	1	20.0			
51	Guscio	114	156	168	126	6	1	20.0			
52	Guscio	122	164	156	114	6	1	20.0			
53	Guscio	111	153	164	122	6	1	20.0			
54	Guscio	119	161	153	111	6	1	20.0			
55	Guscio	113	155	161	119	6	1	20.0			
56	Guscio	125	167	155	113	6	1	20.0			
57	Guscio	123	165	167	125	6	1	20.0			
58	Guscio	109	151	165	123	6	1	20.0			
59	Guscio	118	160	151	109	6	1	20.0			
60	Guscio	117	159	160	118	6	1	20.0			
61	Guscio	149	191	190	148	6	1	20.0			
62	Guscio	150	192	191	149	6	1	20.0			
63	Guscio	154	196	192	150	6	1	20.0			
64	Guscio	158	200	196	154	6	1	20.0			
65	Guscio	162	204	200	158	6	1	20.0			
66	Guscio	166	208	204	162	6	1	20.0			
67	Guscio	152	194	208	166	6	1	20.0			
68	Guscio	157	199	194	152	6	1	20.0			
69	Guscio	163	205	199	157	6	1	20.0			
70	Guscio	168	210	205	163	6	1	20.0			
71	Guscio	156	198	210	168	6	1	20.0			
72	Guscio	164	206	198	156	6	1	20.0			

Elem.	Note	Nodo I	Nodo J	Nodo K	Nodo L	Mat.	Crit.	Spessore	Svincolo	Wink V	Wink O
73	Guscio	153	195	206	164	6	1	20.0			
74	Guscio	161	203	195	153	6	1	20.0			
75	Guscio	155	197	203	161	6	1	20.0			
76	Guscio	167	209	197	155	6	1	20.0			
77	Guscio	165	207	209	167	6	1	20.0			
78	Guscio	151	193	207	165	6	1	20.0			
79	Guscio	160	202	193	151	6	1	20.0			
80	Guscio	159	201	202	160	6	1	20.0			
81	Guscio	212	45	43	211	6	1	20.0			
82	Guscio	214	47	45	212	6	1	20.0			
83	Guscio	216	55	47	214	6	1	20.0			
84	Guscio	218	63	55	216	6	1	20.0			
85	Guscio	220	71	63	218	6	1	20.0			
86	Guscio	222	79	71	220	6	1	20.0			
87	Guscio	224	51	79	222	6	1	20.0			
88	Guscio	226	61	51	224	6	1	20.0			
89	Guscio	228	73	61	226	6	1	20.0			
90	Guscio	230	83	73	228	6	1	20.0			
91	Guscio	213	59	83	230	6	1	20.0			
92	Guscio	217	75	59	213	6	1	20.0			
93	Guscio	219	53	75	217	6	1	20.0			
94	Guscio	221	69	53	219	6	1	20.0			
95	Guscio	225	57	69	221	6	1	20.0			
96	Guscio	227	81	57	225	6	1	20.0			
97	Guscio	229	77	81	227	6	1	20.0			
98	Guscio	215	49	77	229	6	1	20.0			
99	Guscio	223	67	49	215	6	1	20.0			
100	Guscio	231	66	67	223	6	1	20.0			
101	Guscio	191	232	233	190	6	1	20.0			
102	Guscio	192	234	232	191	6	1	20.0			
103	Guscio	196	235	234	192	6	1	20.0			
104	Guscio	200	236	235	196	6	1	20.0			
105	Guscio	204	237	236	200	6	1	20.0			
106	Guscio	208	238	237	204	6	1	20.0			
107	Guscio	194	239	238	208	6	1	20.0			
108	Guscio	199	240	239	194	6	1	20.0			
109	Guscio	205	241	240	199	6	1	20.0			
110	Guscio	210	242	241	205	6	1	20.0			
111	Guscio	198	243	242	210	6	1	20.0			
112	Guscio	206	244	243	198	6	1	20.0			
113	Guscio	195	245	244	206	6	1	20.0			
114	Guscio	203	246	245	195	6	1	20.0			
115	Guscio	197	247	246	203	6	1	20.0			
116	Guscio	209	248	247	197	6	1	20.0			
117	Guscio	207	249	248	209	6	1	20.0			
118	Guscio	193	250	249	207	6	1	20.0			
119	Guscio	202	251	250	193	6	1	20.0			
120	Guscio	201	252	251	202	6	1	20.0			

18 MODELLAZIONE DELLE AZIONI

18.1 LEGENDA TABELLA DATI AZIONI

Il programma consente l'uso di diverse tipologie di carico (azioni). Le azioni utilizzate nella modellazione sono individuate da una sigla identificativa ed un codice numerico (gli elementi strutturali richiamano quest'ultimo nella propria descrizione). Per ogni azione applicata alla struttura viene di riportato il codice, il tipo e la sigla identificativa. Le tabelle successive dettagliano i valori caratteristici di ogni azione in relazione al tipo. Le tabelle riportano infatti i seguenti dati in relazione al tipo:

1	**carico concentrato nodale** 6 dati (forza Fx, Fy, Fz, momento Mx, My, Mz)
2	**spostamento nodale impresso** 6 dati (spostamento Tx,Ty,Tz, rotazione Rx,Ry,Rz)
3	**carico distribuito globale su elemento tipo trave** 7 dati (fx,fy,fz,mx,my,mz,ascissa di inizio carico) 7 dati (fx,fy,fz,mx,my,mz,ascissa di fine carico)
4	**carico distribuito locale su elemento tipo trave** 7 dati (f1,f2,f3,m1,m2,m3,ascissa di inizio carico) 7 dati (f1,f2,f3,m1,m2,m3,ascissa di fine carico)
5	**carico concentrato globale su elemento tipo trave** 7 dati (Fx,Fy,Fz,Mx,My,Mz,ascissa di carico)
6	**carico concentrato locale su elemento tipo trave** 7 dati (F1, F2, F3, M1, M2, M3, ascissa di carico)
7	**variazione termica applicata ad elemento tipo trave** 7 dati (variazioni termiche: uniforme, media e differenza in altezza e larghezza al nodo iniziale e finale)
8	**carico di pressione uniforme su elemento tipo piastra** 1 dato (pressione)
9	**carico di pressione variabile su elemento tipo piastra** 4 dati (pressione, quota, pressione, quota)
10	**variazione termica applicata ad elemento tipo piastra** 2 dati (variazioni termiche: media e differenza nello spessore)
11	**carico variabile generale su elementi tipo trave e piastra** 1 dato descrizione della tipologia 4 dati per segmento (posizione, valore, posizione, valore) la tipologia precisa l'ascissa di definizione, la direzione del carico, la modalità di carico e la larghezza d'influenza per gli elementi tipo trave
12	**gruppo di carichi con impronta su piastra** 9 dati (numero di ripetizioni in direzione X e Y, valore di ciascun carico, posizione centrale del primo, dimensioni dell' impronta, interasse tra i carichi

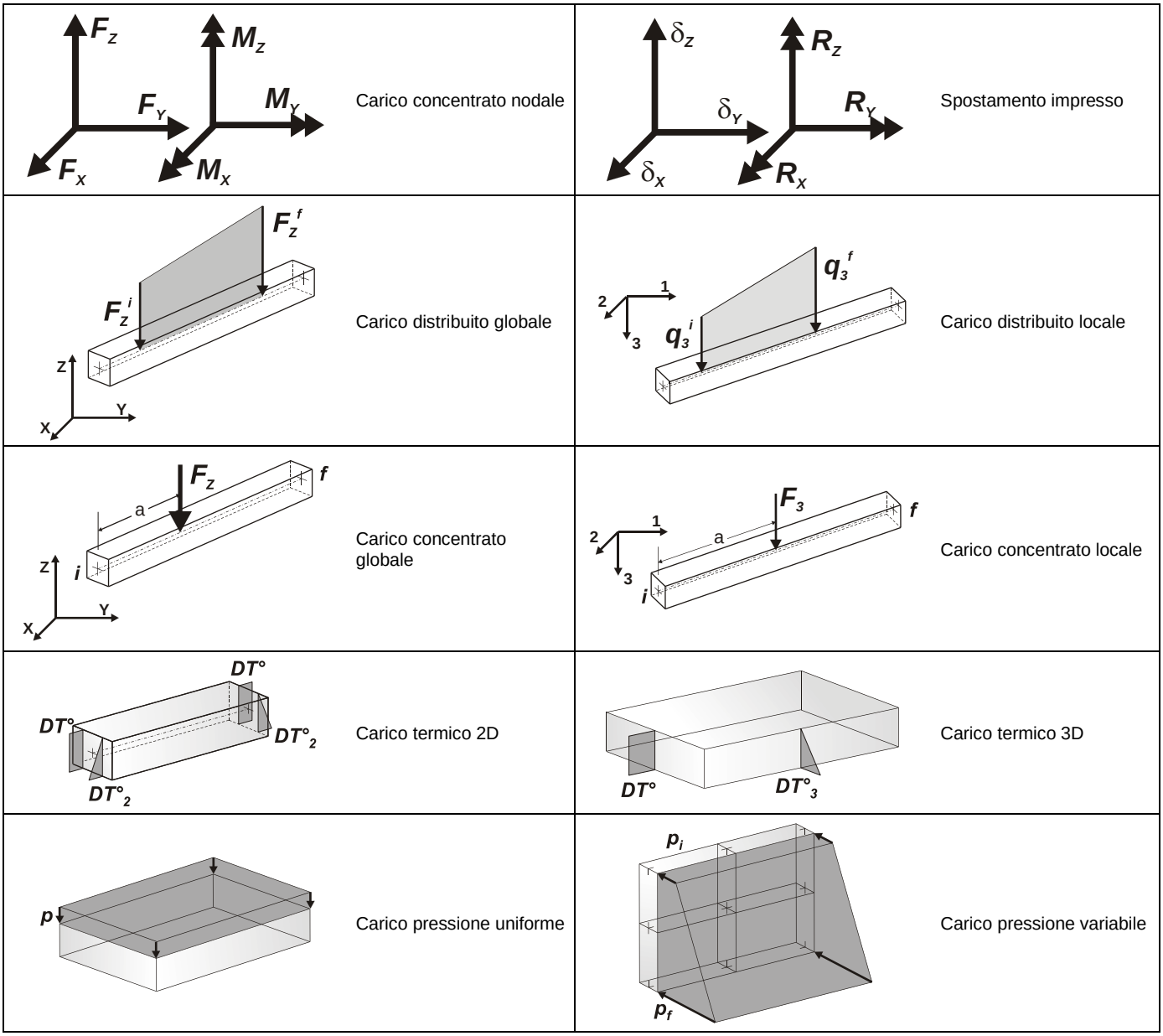

Tipo	carico di pressione uniforme su piastra

Id	Tipo	pressione
		daN/cm2
7	QVK PAN ++ vento*0.4 (da personalizzare)-P3:p=3.200e-03	3.20e-03
8	QVK PAN -- vento*0.4 (da personalizzare)-P3:p=3.200e-03	3.20e-03

Tipo	carico variabile generale

Id	Tipo	ascissa	valore	ascissa	valore
		cm	daN/cm2	cm	daN/cm2
1	CARICO FRENATURA Q3k -QV:var x - Qy - Area				
	X - X Qy Area L2=0.0	-1.000e+05	-0.08	1.000e+05	-0.08
2	CARICO TRAFFICO Q1k 9 kN/MQ-QV:var x - Qz - Area				
	X - X Qz Area L2=0.0	-1.000e+05	-0.09	1.000e+05	-0.09
3	CARICO TRAFFICO Q1k 150 kN-QV:var x - Qz - Area				

Id	Tipo	ascissa	valore	ascissa	valore
	X - X Qz Area L2=0.0	-1.000e+05	-2.94	1.000e+05	-2.94
4	G2 PERMANTE 1 kN/MQ-QV:var x - Qz - Area				
	X - X Qz Area L2=0.0	-1.000e+05	-0.01	1.000e+05	-0.09

19 SCHEMATIZZAZIONE DEI CASI DI CARICO

19.1 LEGENDA TABELLA CASI DI CARICO

Il programma consente l'applicazione di diverse tipologie di casi di carico.
Sono previsti i seguenti 11 tipi di casi di carico:

	Sigla	*Tipo*	*Descrizione*
1	**Ggk**	A	caso di carico comprensivo del peso proprio struttura
2	**Gk**	NA	caso di carico con azioni permanenti
3	**Qk**	NA	caso di carico con azioni variabili
4	**Gsk**	A	caso di carico comprensivo dei carichi permanenti sui solai e sulle coperture
5	**Qsk**	A	caso di carico comprensivo dei carichi variabili sui solai
6	**Qnk**	A	caso di carico comprensivo dei carichi di neve sulle coperture
7	**Qtk**	SA	caso di carico comprensivo di una variazione termica agente sulla struttura
8	**Qvk**	NA	caso di carico comprensivo di azioni da vento sulla struttura
9	**Esk**	SA	caso di carico sismico con analisi statica equivalente
10	**Edk**	SA	caso di carico sismico con analisi dinamica
11	**Etk**	NA	caso di carico comprensivo di azioni derivanti dall' incremento di spinta delle terre in condizione sismica
12	**Pk**	NA	caso di carico comprensivo di azioni derivanti da coazioni, cedimenti e precompressioni

Sono di tipo automatico A (ossia non prevedono introduzione dati da parte dell'utente) i seguenti casi di carico: 1-Ggk; 4-Gsk; 5-Qsk; 6-Qnk.

Sono di tipo semi-automatico SA (ossia prevedono una minima introduzione dati da parte dell'utente) i seguenti casi di carico:
7-Qtk, in quanto richiede solo il valore della variazione termica;
9-Esk e 10-Edk, in quanto richiedono il valore dell'angolo di ingresso del sisma e l'individuazione dei casi di carico partecipanti alla definizione delle masse.

Sono di tipo non automatico NA ossia prevedono la diretta applicazione di carichi generici agli elementi strutturali (si veda il precedente punto Modellazione delle Azioni) i restanti casi di carico.

Nella tabella successiva vengono riportati i casi di carico agenti sulla struttura, con l'indicazione dei dati relativi al caso di carico stesso:
Numero Tipo e *Sigla identificativa*, *Valore di riferimento* del caso di carico (se previsto).

In successione, per i casi di carico non automatici, viene riportato l'elenco di nodi ed elementi direttamente caricati con la sigla identificativa del carico.

Per i casi di carico di tipo sismico (9-Esk e 10-Edk), viene riportata la tabella di definizione delle masse: per ogni caso di carico partecipante alla definizione delle masse viene indicata la relativa aliquota (partecipazione) considerata. Si precisa che per i caso di carico 5-Qsk e 6-Qnk la partecipazione è prevista localmente per ogni elemento solaio o copertura presente nel modello (si confronti il valore Sksol nel capitolo relativo agli elementi solaio) e pertanto la loro partecipazione è di norma pari a uno.

CDC	Tipo	Sigla Id	Note
1	Ggk	CDC=Ggk (peso proprio della struttura)	
2	Edk	CDC=Ed (dinamico SLU) alfa=0.0 (ecc. +)	partecipazione:1.00 per 1 CDC=Ggk (peso proprio della struttura)
3	Edk	CDC=Ed (dinamico SLU) alfa=0.0 (ecc. -)	come precedente CDC sismico
4	Edk	CDC=Ed (dinamico SLU) alfa=90.00 (ecc. +)	come precedente CDC sismico
5	Edk	CDC=Ed (dinamico SLU) alfa=90.00 (ecc. -)	come precedente CDC sismico
6	Edk	CDC=Ed (dinamico SLD) alfa=0.0 (ecc. +)	come precedente CDC sismico
7	Edk	CDC=Ed (dinamico SLD) alfa=0.0 (ecc. -)	come precedente CDC sismico
8	Edk	CDC=Ed (dinamico SLD) alfa=90.00 (ecc. +)	come precedente CDC sismico
9	Edk	CDC=Ed (dinamico SLD) alfa=90.00 (ecc. -)	come precedente CDC sismico
10	Qk	CDC=Qk TRAFFICO	Azioni applicate:
			D3 :da 1 a 120 Azione : CARICO TRAFFICO Q1k 9 kN/MQ-QV:var x - Qz - Area
			D3 :da 1 a 120 Azione : CARICO FRENATURA Q3k -QV:var x - Qy - Area
11	Qvk	CDC=Qvk (carico da vento) dir X +	Azioni applicate:
			D3 :da 1 a 120 Azione : QVK PAN ++ vento*0.4 (da personalizzare)-P3:p=3.200e-03
12	Qvk	CDC=Qvk (carico da vento) dir X -	Azioni applicate:
			D3 :da 1 a 120 Azione : QVK PAN -- vento*0.4 (da personalizzare)-P3:p=3.200e-03
13	Qvk	CDC=Qvk (carico da vento) dir Y +	Azioni applicate:
			D3 :da 1 a 120 Azione : QVK PAN -- vento*0.4 (da personalizzare)-P3:p=3.200e-03
14	Qvk	CDC=Qvk (carico da vento) dir Y -	Azioni applicate:
			D3 :da 1 a 120 Azione : QVK PAN -- vento*0.4 (da personalizzare)-P3:p=3.200e-03
15	Gk	CDC=G2k (permanente generico)	Azioni applicate:
			D3 :da 1 a 120 Azione : G2 PERMANTE 1 kN/MQ-QV:var x - Qz - Area

20 DEFINIZIONE DELLE COMBINAZIONI

20.1 LEGENDA TABELLA COMBINAZIONI DI CARICO

Il programma combina i diversi tipi di casi di carico (CDC) secondo le regole previste dalla normativa vigente.
Le combinazioni previste sono destinate al controllo di sicurezza della struttura ed alla verifica degli spostamenti e delle sollecitazioni.

La prima tabella delle combinazioni riportata di seguito comprende le seguenti informazioni: Numero, Tipo, Sigla identificativa. Una seconda tabella riporta il peso nella combinazione assunto per ogni caso di carico.

Ai fini delle verifiche degli stati limite si definiscono le seguenti combinazioni delle azioni:
***Combinazione fondamentale** SLU*
$\gamma_{G1} \cdot G_1 + \gamma_{G2} \cdot G_2 + \gamma_P \cdot P + \gamma_{Q1} \cdot Q_{k1} + \gamma_{Q2} \cdot \psi_{02} \cdot Q_{k2} + \gamma_{Q3} \cdot \psi_{03} \cdot Q_{k3} + \ldots$
***Combinazione caratteristica** (rara) SLE*
$G_1 + G_2 + P + Q_{k1} + \psi_{02} \cdot Q_{k2} + \psi_{03} \cdot Q_{k3} + \ldots$
***Combinazione frequente** SLE*
$G_1 + G_2 + P + \psi_{11} \cdot Q_{k1} + \psi_{22} \cdot Q_{k2} + \psi_{23} \cdot Q_{k3} + \ldots$
***Combinazione quasi permanente** SLE*
$G1 + G2 + P + \psi_{21} \cdot Q_{k1} + \psi_{22} \cdot Q_{k2} + \psi_{23} \cdot Q_{k3} + \ldots$
***Combinazione sismica**, impiegata per gli stati limite ultimi e di esercizio connessi all'azione sismica E*
$E + G_1 + G_2 + P + \psi_{21} \cdot Q_{k1} + \psi_{22} \cdot Q_{k2} + \ldots$
***Combinazione eccezionale**, impiegata per gli stati limite connessi alle azioni eccezionali*
$G_1 + G_2 + A_d + P + \psi_{21} \cdot Q_{k1} + \psi_{22} \cdot Q_{k2} + \ldots$

Dove:

NTC 2018 Tabella 2.5.I

Destinazione d'uso/azione	**ψ0**	**ψ1**	**ψ2**
Categoria A residenziali	0,70	0,50	0,30
Categoria B uffici	0,70	0,50	0,30
Categoria C ambienti suscettibili di affollamento	0,70	0,70	0,60
Categoria D ambienti ad uso commerciale	0,70	0,70	0,60
Categoria E biblioteche, archivi, magazzini,…	1,00	0,90	0,80
Categoria F Rimesse e parcheggi (autoveicoli <= 30kN)	0,70	0,70	0,60
Categoria G Rimesse e parcheggi (autoveicoli > 30kN)	0,70	0,50	0,30
Categoria H Coperture	0,00	0,00	0,00
Vento	0,60	0,20	0,00
Neve a quota <= 1000 m	0,50	0,20	0,00
Neve a quota > 1000 m	0,70	0,50	0,20
Variazioni Termiche	0,60	0,50	0,00

Nelle verifiche possono essere adottati in alternativa due diversi approcci progettuali:
- per l'approccio 1 si considerano due diverse combinazioni di gruppi di coefficienti di sicurezza parziali per le azioni, per i materiali e per la resistenza globale (combinazione 1 con coefficienti A1 e combinazione 2 con coefficienti A2),
- per l'approccio 2 si definisce un'unica combinazione per le azioni, per la resistenza dei materiali e per la resistenza globale (con coefficienti A1).

NTC 2018 Tabella 2.6.I

		Coefficiente γf	**EQU**	**A1**	**A2**
Carichi permanenti	Favorevoli Sfavorevoli	γG1	0,9 1,1	1,0 1,3	1,0 1,0
Carichi permanenti non strutturali (Non compiutamente definiti)	Favorevoli Sfavorevoli	γG2	0,8 1,5	0,8 1,5	0,8 1,3
Carichi variabili	Favorevoli Sfavorevoli	γQi	0,0 1,5	0,0 1,5	0,0 1,3

Cmb	Tipo	Sigla Id	effetto P-delta
1	SLU	Comb. SLU A1 1	
2	SLU	Comb. SLU A1 2	
3	SLU	Comb. SLU A1 3	
4	SLU	Comb. SLU A1 4	
5	SLU	Comb. SLU A1 5	
6	SLU	Comb. SLU A1 6	
7	SLU	Comb. SLU A1 7	
8	SLU	Comb. SLU A1 8	
9	SLU	Comb. SLU A1 9	

Cmb	Tipo	Sigla Id	effetto P-delta
10	SLU	Comb. SLU A1 10	
11	SLU	Comb. SLU A1 11	
12	SLU	Comb. SLU A1 12	
13	SLU	Comb. SLU A1 13	
14	SLU	Comb. SLU A1 14	
15	SLU	Comb. SLU A1 15	
16	SLU	Comb. SLU A1 16	
17	SLU	Comb. SLU A1 17	
18	SLU	Comb. SLU A1 18	
19	SLU	Comb. SLU A1 19	
20	SLU	Comb. SLU A1 20	
21	SLU	Comb. SLU A1 (SLV sism.) 21	
22	SLU	Comb. SLU A1 (SLV sism.) 22	
23	SLU	Comb. SLU A1 (SLV sism.) 23	
24	SLU	Comb. SLU A1 (SLV sism.) 24	
25	SLU	Comb. SLU A1 (SLV sism.) 25	
26	SLU	Comb. SLU A1 (SLV sism.) 26	
27	SLU	Comb. SLU A1 (SLV sism.) 27	
28	SLU	Comb. SLU A1 (SLV sism.) 28	
29	SLU	Comb. SLU A1 (SLV sism.) 29	
30	SLU	Comb. SLU A1 (SLV sism.) 30	
31	SLU	Comb. SLU A1 (SLV sism.) 31	
32	SLU	Comb. SLU A1 (SLV sism.) 32	
33	SLU	Comb. SLU A1 (SLV sism.) 33	
34	SLU	Comb. SLU A1 (SLV sism.) 34	
35	SLU	Comb. SLU A1 (SLV sism.) 35	
36	SLU	Comb. SLU A1 (SLV sism.) 36	
37	SLU	Comb. SLU A1 (SLV sism.) 37	
38	SLU	Comb. SLU A1 (SLV sism.) 38	
39	SLU	Comb. SLU A1 (SLV sism.) 39	
40	SLU	Comb. SLU A1 (SLV sism.) 40	
41	SLU	Comb. SLU A1 (SLV sism.) 41	
42	SLU	Comb. SLU A1 (SLV sism.) 42	
43	SLU	Comb. SLU A1 (SLV sism.) 43	
44	SLU	Comb. SLU A1 (SLV sism.) 44	
45	SLU	Comb. SLU A1 (SLV sism.) 45	
46	SLU	Comb. SLU A1 (SLV sism.) 46	
47	SLU	Comb. SLU A1 (SLV sism.) 47	
48	SLU	Comb. SLU A1 (SLV sism.) 48	
49	SLU	Comb. SLU A1 (SLV sism.) 49	
50	SLU	Comb. SLU A1 (SLV sism.) 50	
51	SLU	Comb. SLU A1 (SLV sism.) 51	
52	SLU	Comb. SLU A1 (SLV sism.) 52	
53	SLD(sis)	Comb. SLE (SLD Danno sism.) 53	
54	SLD(sis)	Comb. SLE (SLD Danno sism.) 54	
55	SLD(sis)	Comb. SLE (SLD Danno sism.) 55	
56	SLD(sis)	Comb. SLE (SLD Danno sism.) 56	
57	SLD(sis)	Comb. SLE (SLD Danno sism.) 57	
58	SLD(sis)	Comb. SLE (SLD Danno sism.) 58	
59	SLD(sis)	Comb. SLE (SLD Danno sism.) 59	
60	SLD(sis)	Comb. SLE (SLD Danno sism.) 60	
61	SLD(sis)	Comb. SLE (SLD Danno sism.) 61	
62	SLD(sis)	Comb. SLE (SLD Danno sism.) 62	
63	SLD(sis)	Comb. SLE (SLD Danno sism.) 63	
64	SLD(sis)	Comb. SLE (SLD Danno sism.) 64	
65	SLD(sis)	Comb. SLE (SLD Danno sism.) 65	
66	SLD(sis)	Comb. SLE (SLD Danno sism.) 66	
67	SLD(sis)	Comb. SLE (SLD Danno sism.) 67	
68	SLD(sis)	Comb. SLE (SLD Danno sism.) 68	
69	SLD(sis)	Comb. SLE (SLD Danno sism.) 69	
70	SLD(sis)	Comb. SLE (SLD Danno sism.) 70	
71	SLD(sis)	Comb. SLE (SLD Danno sism.) 71	
72	SLD(sis)	Comb. SLE (SLD Danno sism.) 72	
73	SLD(sis)	Comb. SLE (SLD Danno sism.) 73	
74	SLD(sis)	Comb. SLE (SLD Danno sism.) 74	
75	SLD(sis)	Comb. SLE (SLD Danno sism.) 75	
76	SLD(sis)	Comb. SLE (SLD Danno sism.) 76	
77	SLD(sis)	Comb. SLE (SLD Danno sism.) 77	
78	SLD(sis)	Comb. SLE (SLD Danno sism.) 78	
79	SLD(sis)	Comb. SLE (SLD Danno sism.) 79	
80	SLD(sis)	Comb. SLE (SLD Danno sism.) 80	
81	SLD(sis)	Comb. SLE (SLD Danno sism.) 81	
82	SLD(sis)	Comb. SLE (SLD Danno sism.) 82	
83	SLD(sis)	Comb. SLE (SLD Danno sism.) 83	
84	SLD(sis)	Comb. SLE (SLD Danno sism.) 84	

Cmb	Tipo	Sigla Id	effetto P-delta
85	SLU(acc.)	Comb. SLU (Accid.) 85	
86	SLE(r)	Comb. SLE(rara) 86	
87	SLE(r)	Comb. SLE(rara) 87	
88	SLE(r)	Comb. SLE(rara) 88	
89	SLE(r)	Comb. SLE(rara) 89	
90	SLE(r)	Comb. SLE(rara) 90	
91	SLE(r)	Comb. SLE(rara) 91	
92	SLE(r)	Comb. SLE(rara) 92	
93	SLE(r)	Comb. SLE(rara) 93	
94	SLE(r)	Comb. SLE(rara) 94	
95	SLE(r)	Comb. SLE(rara) 95	
96	SLE(f)	Comb. SLE(freq.) 96	
97	SLE(f)	Comb. SLE(freq.) 97	
98	SLE(f)	Comb. SLE(freq.) 98	
99	SLE(f)	Comb. SLE(freq.) 99	
100	SLE(f)	Comb. SLE(freq.) 100	
101	SLE(f)	Comb. SLE(freq.) 101	
102	SLE(p)	Comb. SLE(perm.) 102	

Cmb	CDC 1/15...	CDC 2/16...	CDC 3/17...	CDC 4/18...	CDC 5/19...	CDC 6/20...	CDC 7/21...	CDC 8/22...	CDC 9/23...	CDC 10/24...	CDC 11/25...	CDC 12/26...	CDC 13/27...	CDC 14/28...
1	1.30	0.0	0.0	0.0	0.0	0.0	0.0	0.0	0.0	0.0	0.90	0.90	0.90	0.90
	1.30													
2	1.30	0.0	0.0	0.0	0.0	0.0	0.0	0.0	0.0	1.50	0.90	0.90	0.90	0.90
	1.30													
3	1.00	0.0	0.0	0.0	0.0	0.0	0.0	0.0	0.0	0.0	0.90	0.90	0.90	0.90
	1.00													
4	1.00	0.0	0.0	0.0	0.0	0.0	0.0	0.0	0.0	1.50	0.90	0.90	0.90	0.90
	1.00													
5	1.30	0.0	0.0	0.0	0.0	0.0	0.0	0.0	0.0	0.0	1.50	0.90	0.90	0.90
	1.30													
6	1.30	0.0	0.0	0.0	0.0	0.0	0.0	0.0	0.0	1.50	1.50	0.90	0.90	0.90
	1.30													
7	1.00	0.0	0.0	0.0	0.0	0.0	0.0	0.0	0.0	0.0	1.50	0.90	0.90	0.90
	1.00													
8	1.00	0.0	0.0	0.0	0.0	0.0	0.0	0.0	0.0	1.50	1.50	0.90	0.90	0.90
	1.00													
9	1.30	0.0	0.0	0.0	0.0	0.0	0.0	0.0	0.0	0.0	0.90	1.50	0.90	0.90
	1.30													
10	1.30	0.0	0.0	0.0	0.0	0.0	0.0	0.0	0.0	1.50	0.90	1.50	0.90	0.90
	1.30													
11	1.00	0.0	0.0	0.0	0.0	0.0	0.0	0.0	0.0	0.0	0.90	1.50	0.90	0.90
	1.00													
12	1.00	0.0	0.0	0.0	0.0	0.0	0.0	0.0	0.0	1.50	0.90	1.50	0.90	0.90
	1.00													
13	1.30	0.0	0.0	0.0	0.0	0.0	0.0	0.0	0.0	0.0	0.90	0.90	1.50	0.90
	1.30													
14	1.30	0.0	0.0	0.0	0.0	0.0	0.0	0.0	0.0	1.50	0.90	0.90	1.50	0.90
	1.30													
15	1.00	0.0	0.0	0.0	0.0	0.0	0.0	0.0	0.0	0.0	0.90	0.90	1.50	0.90
	1.00													
16	1.00	0.0	0.0	0.0	0.0	0.0	0.0	0.0	0.0	1.50	0.90	0.90	1.50	0.90
	1.00													
17	1.30	0.0	0.0	0.0	0.0	0.0	0.0	0.0	0.0	0.0	0.90	0.90	0.90	1.50
	1.30													
18	1.30	0.0	0.0	0.0	0.0	0.0	0.0	0.0	0.0	1.50	0.90	0.90	0.90	1.50
	1.30													
19	1.00	0.0	0.0	0.0	0.0	0.0	0.0	0.0	0.0	0.0	0.90	0.90	0.90	1.50
	1.00													
20	1.00	0.0	0.0	0.0	0.0	0.0	0.0	0.0	0.0	1.50	0.90	0.90	0.90	1.50
	1.00													
21	1.00	-1.00	0.0	-0.30	0.0	0.0	0.0	0.0	0.0	0.0	0.0	0.0	0.0	0.0
	1.00													
22	1.00	-1.00	0.0	0.30	0.0	0.0	0.0	0.0	0.0	0.0	0.0	0.0	0.0	0.0
	1.00													
23	1.00	1.00	0.0	-0.30	0.0	0.0	0.0	0.0	0.0	0.0	0.0	0.0	0.0	0.0
	1.00													
24	1.00	1.00	0.0	0.30	0.0	0.0	0.0	0.0	0.0	0.0	0.0	0.0	0.0	0.0
	1.00													
25	1.00	-1.00	0.0	0.0	-0.30	0.0	0.0	0.0	0.0	0.0	0.0	0.0	0.0	0.0
	1.00													
26	1.00	-1.00	0.0	0.0	0.30	0.0	0.0	0.0	0.0	0.0	0.0	0.0	0.0	0.0

Cmb	CDC 1/15...	CDC 2/16...	CDC 3/17...	CDC 4/18...	CDC 5/19...	CDC 6/20...	CDC 7/21...	CDC 8/22...	CDC 9/23...	CDC 10/24...	CDC 11/25...	CDC 12/26...	CDC 13/27...	CDC 14/28...
	1.00													
27	1.00	1.00	0.0	0.0	-0.30	0.0	0.0	0.0	0.0	0.0	0.0	0.0	0.0	0.0
	1.00													
28	1.00	1.00	0.0	0.0	0.30	0.0	0.0	0.0	0.0	0.0	0.0	0.0	0.0	0.0
	1.00													
29	1.00	0.0	-1.00	-0.30	0.0	0.0	0.0	0.0	0.0	0.0	0.0	0.0	0.0	0.0
	1.00													
30	1.00	0.0	-1.00	0.30	0.0	0.0	0.0	0.0	0.0	0.0	0.0	0.0	0.0	0.0
	1.00													
31	1.00	0.0	1.00	-0.30	0.0	0.0	0.0	0.0	0.0	0.0	0.0	0.0	0.0	0.0
	1.00													
32	1.00	0.0	1.00	0.30	0.0	0.0	0.0	0.0	0.0	0.0	0.0	0.0	0.0	0.0
	1.00													
33	1.00	0.0	-1.00	0.0	-0.30	0.0	0.0	0.0	0.0	0.0	0.0	0.0	0.0	0.0
	1.00													
34	1.00	0.0	-1.00	0.0	0.30	0.0	0.0	0.0	0.0	0.0	0.0	0.0	0.0	0.0
	1.00													
35	1.00	0.0	1.00	0.0	-0.30	0.0	0.0	0.0	0.0	0.0	0.0	0.0	0.0	0.0
	1.00													
36	1.00	0.0	1.00	0.0	0.30	0.0	0.0	0.0	0.0	0.0	0.0	0.0	0.0	0.0
	1.00													
37	1.00	-0.30	0.0	-1.00	0.0	0.0	0.0	0.0	0.0	0.0	0.0	0.0	0.0	0.0
	1.00													
38	1.00	-0.30	0.0	1.00	0.0	0.0	0.0	0.0	0.0	0.0	0.0	0.0	0.0	0.0
	1.00													
39	1.00	0.30	0.0	-1.00	0.0	0.0	0.0	0.0	0.0	0.0	0.0	0.0	0.0	0.0
	1.00													
40	1.00	0.30	0.0	1.00	0.0	0.0	0.0	0.0	0.0	0.0	0.0	0.0	0.0	0.0
	1.00													
41	1.00	0.0	-0.30	-1.00	0.0	0.0	0.0	0.0	0.0	0.0	0.0	0.0	0.0	0.0
	1.00													
42	1.00	0.0	-0.30	1.00	0.0	0.0	0.0	0.0	0.0	0.0	0.0	0.0	0.0	0.0
	1.00													
43	1.00	0.0	0.30	-1.00	0.0	0.0	0.0	0.0	0.0	0.0	0.0	0.0	0.0	0.0
	1.00													
44	1.00	0.0	0.30	1.00	0.0	0.0	0.0	0.0	0.0	0.0	0.0	0.0	0.0	0.0
	1.00													
45	1.00	-0.30	0.0	0.0	-1.00	0.0	0.0	0.0	0.0	0.0	0.0	0.0	0.0	0.0
	1.00													
46	1.00	-0.30	0.0	0.0	1.00	0.0	0.0	0.0	0.0	0.0	0.0	0.0	0.0	0.0
	1.00													
47	1.00	0.30	0.0	0.0	-1.00	0.0	0.0	0.0	0.0	0.0	0.0	0.0	0.0	0.0
	1.00													
48	1.00	0.30	0.0	0.0	1.00	0.0	0.0	0.0	0.0	0.0	0.0	0.0	0.0	0.0
	1.00													
49	1.00	0.0	-0.30	0.0	-1.00	0.0	0.0	0.0	0.0	0.0	0.0	0.0	0.0	0.0
	1.00													
50	1.00	0.0	-0.30	0.0	1.00	0.0	0.0	0.0	0.0	0.0	0.0	0.0	0.0	0.0
	1.00													
51	1.00	0.0	0.30	0.0	-1.00	0.0	0.0	0.0	0.0	0.0	0.0	0.0	0.0	0.0
	1.00													
52	1.00	0.0	0.30	0.0	1.00	0.0	0.0	0.0	0.0	0.0	0.0	0.0	0.0	0.0
	1.00													
53	1.00	0.0	0.0	0.0	0.0	-1.00	0.0	-0.30	0.0	0.0	0.0	0.0	0.0	0.0
	1.00													
54	1.00	0.0	0.0	0.0	0.0	-1.00	0.0	0.30	0.0	0.0	0.0	0.0	0.0	0.0
	1.00													
55	1.00	0.0	0.0	0.0	0.0	1.00	0.0	-0.30	0.0	0.0	0.0	0.0	0.0	0.0
	1.00													
56	1.00	0.0	0.0	0.0	0.0	1.00	0.0	0.30	0.0	0.0	0.0	0.0	0.0	0.0
	1.00													
57	1.00	0.0	0.0	0.0	0.0	-1.00	0.0	0.0	-0.30	0.0	0.0	0.0	0.0	0.0
	1.00													
58	1.00	0.0	0.0	0.0	0.0	-1.00	0.0	0.0	0.30	0.0	0.0	0.0	0.0	0.0
	1.00													
59	1.00	0.0	0.0	0.0	0.0	1.00	0.0	0.0	-0.30	0.0	0.0	0.0	0.0	0.0
	1.00													
60	1.00	0.0	0.0	0.0	0.0	1.00	0.0	0.0	0.30	0.0	0.0	0.0	0.0	0.0
	1.00													
61	1.00	0.0	0.0	0.0	0.0	0.0	-1.00	-0.30	0.0	0.0	0.0	0.0	0.0	0.0
	1.00													
62	1.00	0.0	0.0	0.0	0.0	0.0	-1.00	0.30	0.0	0.0	0.0	0.0	0.0	0.0
	1.00													
63	1.00	0.0	0.0	0.0	0.0	0.0	1.00	-0.30	0.0	0.0	0.0	0.0	0.0	0.0

Cmb	CDC 1/15...	CDC 2/16...	CDC 3/17...	CDC 4/18...	CDC 5/19...	CDC 6/20...	CDC 7/21...	CDC 8/22...	CDC 9/23...	CDC 10/24...	CDC 11/25...	CDC 12/26...	CDC 13/27...	CDC 14/28...
	1.00													
64	1.00	0.0	0.0	0.0	0.0	0.0	1.00	0.30	0.0	0.0	0.0	0.0	0.0	0.0
	1.00													
65	1.00	0.0	0.0	0.0	0.0	0.0	-1.00	0.0	-0.30	0.0	0.0	0.0	0.0	0.0
	1.00													
66	1.00	0.0	0.0	0.0	0.0	0.0	-1.00	0.0	0.30	0.0	0.0	0.0	0.0	0.0
	1.00													
67	1.00	0.0	0.0	0.0	0.0	0.0	1.00	0.0	-0.30	0.0	0.0	0.0	0.0	0.0
	1.00													
68	1.00	0.0	0.0	0.0	0.0	0.0	1.00	0.0	0.30	0.0	0.0	0.0	0.0	0.0
	1.00													
69	1.00	0.0	0.0	0.0	0.0	-0.30	0.0	-1.00	0.0	0.0	0.0	0.0	0.0	0.0
	1.00													
70	1.00	0.0	0.0	0.0	0.0	-0.30	0.0	1.00	0.0	0.0	0.0	0.0	0.0	0.0
	1.00													
71	1.00	0.0	0.0	0.0	0.0	0.30	0.0	-1.00	0.0	0.0	0.0	0.0	0.0	0.0
	1.00													
72	1.00	0.0	0.0	0.0	0.0	0.30	0.0	1.00	0.0	0.0	0.0	0.0	0.0	0.0
	1.00													
73	1.00	0.0	0.0	0.0	0.0	0.0	-0.30	-1.00	0.0	0.0	0.0	0.0	0.0	0.0
	1.00													
74	1.00	0.0	0.0	0.0	0.0	0.0	-0.30	1.00	0.0	0.0	0.0	0.0	0.0	0.0
	1.00													
75	1.00	0.0	0.0	0.0	0.0	0.0	0.30	-1.00	0.0	0.0	0.0	0.0	0.0	0.0
	1.00													
76	1.00	0.0	0.0	0.0	0.0	0.0	0.30	1.00	0.0	0.0	0.0	0.0	0.0	0.0
	1.00													
77	1.00	0.0	0.0	0.0	0.0	-0.30	0.0	0.0	-1.00	0.0	0.0	0.0	0.0	0.0
	1.00													
78	1.00	0.0	0.0	0.0	0.0	-0.30	0.0	0.0	1.00	0.0	0.0	0.0	0.0	0.0
	1.00													
79	1.00	0.0	0.0	0.0	0.0	0.30	0.0	0.0	-1.00	0.0	0.0	0.0	0.0	0.0
	1.00													
80	1.00	0.0	0.0	0.0	0.0	0.30	0.0	0.0	1.00	0.0	0.0	0.0	0.0	0.0
	1.00													
81	1.00	0.0	0.0	0.0	0.0	0.0	-0.30	0.0	-1.00	0.0	0.0	0.0	0.0	0.0
	1.00													
82	1.00	0.0	0.0	0.0	0.0	0.0	-0.30	0.0	1.00	0.0	0.0	0.0	0.0	0.0
	1.00													
83	1.00	0.0	0.0	0.0	0.0	0.0	0.30	0.0	-1.00	0.0	0.0	0.0	0.0	0.0
	1.00													
84	1.00	0.0	0.0	0.0	0.0	0.0	0.30	0.0	1.00	0.0	0.0	0.0	0.0	0.0
	1.00													
85	1.00	0.0	0.0	0.0	0.0	0.0	0.0	0.0	0.0	0.0	0.0	0.0	0.0	0.0
	1.00													
86	1.00	0.0	0.0	0.0	0.0	0.0	0.0	0.0	0.0	0.0	0.60	0.60	0.60	0.60
	1.00													
87	1.00	0.0	0.0	0.0	0.0	0.0	0.0	0.0	0.0	1.00	0.60	0.60	0.60	0.60
	1.00													
88	1.00	0.0	0.0	0.0	0.0	0.0	0.0	0.0	0.0	0.0	1.00	0.60	0.60	0.60
	1.00													
89	1.00	0.0	0.0	0.0	0.0	0.0	0.0	0.0	0.0	1.00	1.00	0.60	0.60	0.60
	1.00													
90	1.00	0.0	0.0	0.0	0.0	0.0	0.0	0.0	0.0	0.0	0.60	1.00	0.60	0.60
	1.00													
91	1.00	0.0	0.0	0.0	0.0	0.0	0.0	0.0	0.0	1.00	0.60	1.00	0.60	0.60
	1.00													
92	1.00	0.0	0.0	0.0	0.0	0.0	0.0	0.0	0.0	0.0	0.60	0.60	1.00	0.60
	1.00													
93	1.00	0.0	0.0	0.0	0.0	0.0	0.0	0.0	0.0	1.00	0.60	0.60	1.00	0.60
	1.00													
94	1.00	0.0	0.0	0.0	0.0	0.0	0.0	0.0	0.0	0.0	0.60	0.60	0.60	1.00
	1.00													
95	1.00	0.0	0.0	0.0	0.0	0.0	0.0	0.0	0.0	1.00	0.60	0.60	0.60	1.00
	1.00													
96	1.00	0.0	0.0	0.0	0.0	0.0	0.0	0.0	0.0	0.0	0.0	0.0	0.0	0.0
	1.00													
97	1.00	0.0	0.0	0.0	0.0	0.0	0.0	0.0	0.0	0.90	0.0	0.0	0.0	0.0
	1.00													
98	1.00	0.0	0.0	0.0	0.0	0.0	0.0	0.0	0.0	0.0	0.20	0.0	0.0	0.0
	1.00													
99	1.00	0.0	0.0	0.0	0.0	0.0	0.0	0.0	0.0	0.0	0.0	0.20	0.0	0.0
	1.00													
100	1.00	0.0	0.0	0.0	0.0	0.0	0.0	0.0	0.0	0.0	0.0	0.0	0.20	0.0

Cmb	CDC 1/15...	CDC 2/16...	CDC 3/17...	CDC 4/18...	CDC 5/19...	CDC 6/20...	CDC 7/21...	CDC 8/22...	CDC 9/23...	CDC 10/24...	CDC 11/25...	CDC 12/26...	CDC 13/27...	CDC 14/28...
	1.00													
101	1.00	0.0	0.0	0.0	0.0	0.0	0.0	0.0	0.0	0.0	0.0	0.0	0.0	0.20
	1.00													
102	1.00	0.0	0.0	0.0	0.0	0.0	0.0	0.0	0.0	0.0	0.0	0.0	0.0	0.0
	1.00													

21 AZIONE SISMICA

21.1 VALUTAZIONE DELL' AZIONE SISMICA

L'azione sismica sulle costruzioni è valutata a partire dalla "pericolosità sismica di base", in condizioni ideali di sito di riferimento rigido con superficie topografica orizzontale.
Allo stato attuale, la pericolosità sismica su reticolo di riferimento nell'intervallo di riferimento è fornita dai dati pubblicati sul sito http://esse1.mi.ingv.it/.
Per punti non coincidenti con il reticolo di riferimento e periodi di ritorno non contemplati direttamente si opera come indicato nell' allegato alle NTC (rispettivamente media pesata e interpolazione).

L' azione sismica viene definita in relazione ad un periodo di riferimento Vr che si ricava, per ciascun tipo di costruzione, moltiplicandone la vita nominale per il coefficiente d'uso (vedi tabella Parametri della struttura). Fissato il periodo di riferimento Vr e la probabilità di superamento Pver associata a ciascuno degli stati limite considerati, si ottiene il periodo di ritorno Tr e i relativi parametri di pericolosità sismica (vedi tabella successiva):
ag: accelerazione orizzontale massima del terreno;
Fo: valore massimo del fattore di amplificazione dello spettro in accelerazione orizzontale;
T*c: periodo di inizio del tratto a velocità costante dello spettro in accelerazione orizzontale;

21.1.1 Parametri della struttura

Classe d'uso	Vita Vn [anni]	Coeff. Uso	Periodo Vr [anni]	Tipo di suolo	Categoria topografica
II	50.0	1.0	50.0	C	T1

Individuati su reticolo di riferimento i parametri di pericolosità sismica si valutano i parametri spettrali riportati in tabella:
S è il coefficiente che tiene conto della categoria di sottosuolo e delle condizioni topografiche mediante la relazione seguente S = Ss*St (3.2.3)
Fo è il fattore che quantifica l'amplificazione spettrale massima, su sito di riferimento rigido orizzontale
Fv è il fattore che quantifica l'amplificazione spettrale massima verticale, in termini di accelerazione orizzontale massima del terreno ag su sito di riferimento rigido orizzontale
Tb è il periodo corrispondente all'inizio del tratto dello spettro ad accelerazione costante.
Tc è il periodo corrispondente all'inizio del tratto dello spettro a velocità costante.
Td è il periodo corrispondente all'inizio del tratto dello spettro a spostamento costante.

Lo spettro di risposta elastico in accelerazione della componente orizzontale del moto sismico, Se, è definito dalle seguenti espressioni:

$$0 \le T < T_B \qquad S_e(T) = a_g \cdot S \cdot \eta \cdot F_o \cdot \left[\frac{T}{T_B} + \frac{1}{\eta \cdot F_o}\left(1 - \frac{T}{T_B}\right)\right]$$

$$T_B \le T < T_C \qquad S_e(T) = a_g \cdot S \cdot \eta \cdot F_o$$

$$T_C \le T < T_D \qquad S_e(T) = a_g \cdot S \cdot \eta \cdot F_o \cdot \left(\frac{T_C}{T}\right)$$

$$T_D \le T \qquad S_e(T) = a_g \cdot S \cdot \eta \cdot F_o \cdot \left(\frac{T_C \cdot T_D}{T^2}\right)$$

Dove per sottosuolo di categoria **A** i coefficienti S_S e C_C valgono 1; mentre per le categorie di sottosuolo B, C, D, E i coefficienti S_S e C_C vengono calcolati mediante le espressioni riportane nella seguente Tabella

Categoria sottosuolo	S_S	C_C
A	1,00	1,00
B	$1{,}00 \le 1{,}40 - 0{,}40 \cdot F_o \cdot \frac{a_g}{g} \le 1{,}20$	$1{,}10 \cdot (T_C^*)^{-0{,}20}$
C	$1{,}00 \le 1{,}70 - 0{,}60 \cdot F_o \cdot \frac{a_g}{g} \le 1{,}50$	$1{,}05 \cdot (T_C^*)^{-0{,}33}$
D	$0{,}90 \le 2{,}40 - 1{,}50 \cdot F_o \cdot \frac{a_g}{g} \le 1{,}80$	$1{,}25 \cdot (T_C^*)^{-0{,}50}$
E	$1{,}00 \le 2{,}00 - 1{,}10 \cdot F_o \cdot \frac{a_g}{g} \le 1{,}60$	$1{,}15 \cdot (T_C^*)^{-0{,}40}$

Per tenere conto delle condizioni topografiche e in assenza di specifiche analisi di risposta sismica locale, si utilizzano i valori del coefficiente topografico S_T riportati nella seguente Tabella

Categoria topografica	Ubicazione dell'opera o dell'intervento	S_T
T1	-	1,0
T2	In corrispondenza della sommità del pendio	1,2
T3	In corrispondenza della cresta di un rilievo con pendenza media minore o uguale a 30°	1,2
T4	In corrispondenza della cresta di un rilievo con pendenza media maggiore di 30°	1,4

Lo spettro di risposta elastico in accelerazione della componente verticale del moto sismico, Sve, è definito dalle espressioni:

$$0 \le T < T_B \qquad S_{ve}(T) = a_g \cdot S \cdot \eta \cdot F_v \cdot \left[\frac{T}{T_B} + \frac{1}{\eta \cdot F_o}\left(1 - \frac{T}{T_B}\right)\right]$$

$$T_B \le T < T_C \qquad S_{ve}(T) = a_g \cdot S \cdot \eta \cdot F_v$$

$$T_C \le T < T_D \qquad S_{ve}(T) = a_g \cdot S \cdot \eta \cdot F_v \cdot \left(\frac{T_C}{T}\right)$$

$$T_D \le T \qquad S_{ve}(T) = a_g \cdot S \cdot \eta \cdot F_v \cdot \left(\frac{T_C \cdot T_D}{T^2}\right)$$

I valori di S_S, T_B, T_C e T_D, sono riportati nella seguenteTabella

Categoria di sottosuolo	S_S	T_B	T_C	T_D
A, B, C, D, E	1,0	0,05 s	0,15 s	1,0 s

Id nodo	Longitudine	Latitudine	Distanza
			Km
Loc.	12.244	45.669	
11859	12.205	45.628	5.457
11860	12.276	45.629	5.079
11638	12.275	45.679	2.644
11637	12.204	45.678	3.254

SL	Pver	Tr	ag	Fo	T*c
		Anni	g		sec
SLO	81.0	30.1	0.038	2.563	0.236
SLD	63.0	50.3	0.051	2.483	0.260
SLV	10.0	474.6	0.137	2.473	0.339
SLC	5.0	974.8	0.183	2.511	0.349

SL	ag	S	Fo	Fv	Tb	Tc	Td
	g				sec	sec	sec
SLO	0.038	1.500	2.563	0.672	0.133	0.399	1.751
SLD	0.051	1.500	2.483	0.755	0.142	0.426	1.803
SLV	0.137	1.496	2.473	1.237	0.170	0.509	2.149
SLC	0.183	1.425	2.511	1.449	0.173	0.519	2.330

22 RISULTATI ANALISI SISMICHE

22.1 LEGENDA TABELLA ANALISI SISMICHE

Il programma consente l'analisi di diverse configurazioni sismiche.

Sono previsti, infatti, i seguenti casi di carico:
9. Esk caso di carico sismico con analisi statica equivalente
10. Edk caso di carico sismico con analisi dinamica

Ciascun caso di carico è caratterizzato da un angolo di ingresso e da una configurazione di masse determinante la forza sismica complessiva (si rimanda al capitolo relativo ai casi di carico per chiarimenti inerenti questo aspetto).

Nella colonna Note, in funzione della norma in uso sono riportati i parametri fondamentali che caratterizzano l' azione sismica: in particolare possono essere presenti i seguenti valori:

Angolo di ingresso	Angolo di ingresso dell'azione sismica orizzontale
Fattore di importanza	Fattore di importanza dell'edificio, in base alla categoria di appartenenza
Zona sismica	Zona sismica
Accelerazione ag	Accelerazione orizzontale massima sul suolo
Categoria suolo	Categoria di profilo stratigrafico del suolo di fondazione
Fattore q	Fattore di struttura/di comportamento. Dipendente dalla tipologia strutturale
Amplificazione ND	Coefficiente di amplificazione q/qND delle azioni sismiche (solo per elementi progettati in campo non dissipativo)
Fattore di sito S	Fattore dipendente dalla stratigrafia e dal profilo topografico
Classe di duttilità CD	Classe di duttilità della struttura – "A" duttilità alta, "B" duttilità bassa
Fattore riduz. SLD	Fattore di riduzione dello spettro elastico per lo stato limite di danno
Periodo proprio T1	Periodo proprio di vibrazione della struttura
Coefficiente Lambda	Coefficiente dipendente dal periodo proprio T1 e dal numero di piani della struttura
Ordinata spettro Sd(T1)	Valore delle ordinate dello spettro di progetto per lo stato limite ultimo, componente orizzontale (verticale Svd)
Ordinata spettro Se(T1)	Valore delle ordinate dello spettro elastico ridotta del fattore SLD per lo stato limite di danno, componente orizzontale (verticale Sve)
Ordinata spettro S (Tb-Tc)	Valore dell'ordinata dello spettro in uso nel tratto costante
numero di modi considerati	Numero di modi di vibrare della struttura considerati nell'analisi dinamica

Nel caso di elementi progettati in campo non dissipativo vengono adottate le sollecitazioni calcolate con un fattore qND ricavato come da 7.3.2 in funzione del fattore di comportamento q utilizzato per la struttura: 1<qND=2/3*q < 1.5
Il coefficiente di amplificazione delle azioni sismiche rispetto alle azioni calcolate con il fattore di comportamento globale viene indicato nelle relative tabelle.

Per ciascun caso di carico sismico viene riportato l'insieme di dati sotto riportati (le masse sono espresse in unità di forza):

c) analisi sismica statica equivalente:
   - quota, posizione del centro di applicazione e azione orizzontale risultante, posizione del baricentro delle rigidezze, rapporto r/Ls (per strutture a nucleo), indici di regolarità e/r secondo EC8 4.2.3.2
   - azione sismica complessiva

d) analisi sismica dinamica con spettro di risposta:
   - quota, posizione del centro di massa e massa risultante, posizione del baricentro delle rigidezze, rapporto r/Ls (per strutture a nucleo) **,** indici di regolarità e/r secondo EC8 4.2.3.2
   - frequenza, periodo, accelerazione spettrale, massa eccitata nelle tre direzioni globali per tutti i modi
   - massa complessiva ed aliquota di massa complessiva eccitata.

Per ciascuna combinazione sismica definita SLD o SLO viene riportato il livello di deformazione etaT (dr) degli elementi strutturali verticali. Per semplicità di consultazione il livello è espresso anche in unità 1000*etaT/h da confrontare direttamente con i valori forniti nella norma (es. 5 per edifici con tamponamenti collegati rigidamente alla struttura, 10.0 per edifici con tamponamenti collegati elasticamente, 3 per edifici in muratura ordinaria, 4 per edifici in muratura armata).

Qualora si applichi il D.M. 96 (vedi NOTA sul capitolo "normativa di riferimento") l'analisi sismica dinamica può essere comprensiva di sollecitazione verticale contemporanea a quella orizzontale, nel qual caso è effettuata una sovrapposizione degli effetti in ragione della radice dei quadrati degli effetti stessi. Per ciascuna combinazione sismica - analisi effettuate con il D.M. 96 (vedi NOTA sul capitolo "normativa di riferimento") - viene riportato il livello di deformazione etaT, etaP e etaD degli elementi strutturali verticali. Per semplicità di consultazione il livello è espresso in unità 1000*etaT/h da confrontare direttamente con il valore 2 o 4 per la verifica.

Per gli edifici sismicamente isolati si riportano di seguito le verifiche condotte sui dispositivi di isolamento. Le verifiche sono effettuate secondo la circolare n.7/2019 del C.S.LL.PP nelle combinazioni in SLC come previsto dal DM 17-01-2018. Per ogni combinazione è riportato il codice di verifica ed i valori utilizzati per la verifica: spostamento dE, area ridotta e dimensione A2, azione verticale, deformazioni di taglio dell'elastomero e tensioni nell'acciaio.
Qualora si applichi l'Ordinanza 3274 e s.m.i. le verifiche sono eseguite in accordo con l'allegato 10.A.
In particolare la tabella, per ogni combinazione di calcolo, riporta:

Nodo	Nodo di appoggio dell' isolatore

Cmb	Combinazione oggetto della verifica
Verif.	Codice di verifica ok – verifica positiva , NV – verifica negativa, ND – verifica non completata
dE	Spostamento relativo tra le due facce (amplificato del 20% per Ordinanza 3274 e smi) combinato con la regola del 30%
Ang fi	Angolo utilizzato per il calcolo dell' area ridotta Ar (per dispositivi circolari)
V	Azione verticale agente
Ar	Area ridotta efficace
Dim A2	Dimensione utile per il calcolo della deformazione per rotazione
Sig s	Tensione nell' inserto in acciaio
Gam c(a,s,t)	Deformazioni di taglio dell' elestomero
Vcr	Carico critico per instabilità

Affinché la verifica sia positiva deve essere:

7) V > 0
8) Sig s < fyk
9) Gam t < 5
10) Gam s < Gam * (caratteristica dell' elastomero)
11) Gam s < 2
12) V < 0.5 Vcr

CDC	Tipo	Sigla Id	Note
2	Edk	CDC=Ed (dinamico SLU) alfa=0.0 (ecc. +)	
			categoria suolo: C
			fattore di sito S = 1.496
			ordinata spettro (tratto Tb-Tc) = 0.508 g
			angolo di ingresso:0.0
			eccentricità aggiuntiva: positiva
			periodo proprio T1: 0.013 sec.
			fattore q: 1.000
			amplificazione ND (non dissipativi): 1.000
			fattore per spost. mu d: 1.000
			classe di duttilità CD: ND
			numero di modi considerati: 9
			combinaz. modale: CQC

Quota	M Sismica x g	Pos. GX	Pos. GY	E agg. X-X	E agg. Y-Y	Pos. KX	Pos. KY	(r/Ls)^2	rapp. ex/rx	rapp. ey/ry
cm	daN	cm	cm	cm	cm	cm	cm			
105.00	2.400e+04	165.00	600.00	0.0	-60.00	165.00	600.00	1.093	0.0	0.0
Risulta	2.400e+04									

Modo	Frequenza	Periodo	Acc. Spettrale	M efficace X x g	%	M efficace Y x g	%	M efficace Z x g	%	Energia	Energia x v
	Hz	sec	g	daN		daN		daN			
1	12.024	0.083	0.353	0.0	0.0	0.0	0.0	1.916e+04	79.8	0.0	0.0
2	23.454	0.043	0.281	55.04	0.2	0.0	0.0	0.0	0.0	0.0	0.0
3	40.518	0.025	0.249	0.0	0.0	156.12	0.7	0.0	0.0	0.0	0.0
4	58.352	0.017	0.236	11.89	4.95e-02	0.0	0.0	0.0	0.0	0.0	0.0
5	62.164	0.016	0.234	0.0	0.0	0.0	0.0	0.02	9.54e-05	0.0	0.0
6	75.848	0.013	0.229	1.773e+04	73.9	0.0	0.0	0.0	0.0	0.0	0.0
7	90.871	0.011	0.225	2.31e-05	0.0	7.25e-05	0.0	2213.27	9.2	0.0	0.0
8	102.167	0.010	0.223	3.01e-04	1.26e-06	0.17	7.22e-04	3.19e-05	0.0	0.0	0.0
9	108.998	0.009	0.222	1089.52	4.5	5.12e-05	0.0	2.17e-05	0.0	0.0	0.0
Risulta				1.889e+04		156.29		2.137e+04			
In percentuale				78.69		0.65		89.06			

CDC	Tipo	Sigla Id	Note
3	Edk	CDC=Ed (dinamico SLU) alfa=0.0 (ecc. -)	
			categoria suolo: C
			fattore di sito S = 1.496
			ordinata spettro (tratto Tb-Tc) = 0.508 g
			angolo di ingresso:0.0
			eccentricità aggiuntiva: negativa
			periodo proprio T1: 0.013 sec.
			fattore q: 1.000

CDC	Tipo	Sigla Id	Note
			amplificazione ND (non dissipativi): 1.000
			fattore per spost. mu d: 1.000
			classe di duttilità CD: ND
			numero di modi considerati: 9
			combinaz. modale: CQC

Quota	M Sismica x g	Pos. GX	Pos. GY	E agg. X-X	E agg. Y-Y	Pos. KX	Pos. KY	(r/Ls)^2	rapp. ex/rx	rapp. ey/ry
cm	daN	cm	cm	cm	cm	cm	cm			
105.00	2.400e+04	165.00	600.00	0.0	60.00	165.00	600.00	1.093	0.0	0.0
Risulta	2.400e+04									

Modo	Frequenza	Periodo	Acc. Spettrale	M efficace X x g	%	M efficace Y x g	%	M efficace Z x g	%	Energia	Energia x v
	Hz	sec	g	daN		daN		daN			
1	12.024	0.083	0.353	0.0	0.0	0.0	0.0	1.916e+04	79.8	0.0	0.0
2	23.454	0.043	0.281	55.04	0.2	0.0	0.0	0.0	0.0	0.0	0.0
3	40.518	0.025	0.249	0.0	0.0	156.12	0.7	0.0	0.0	0.0	0.0
4	58.352	0.017	0.236	11.88	4.95e-02	0.0	0.0	0.0	0.0	0.0	0.0
5	62.164	0.016	0.234	0.0	0.0	0.0	0.0	0.02	9.53e-05	0.0	0.0
6	75.848	0.013	0.229	1.773e+04	73.9	0.0	0.0	0.0	0.0	0.0	0.0
7	90.871	0.011	0.225	0.0	0.0	6.04e-06	0.0	2213.44	9.2	0.0	0.0
8	102.167	0.010	0.223	1.48e-05	0.0	0.18	7.70e-04	2.23e-05	0.0	0.0	0.0
9	108.998	0.009	0.222	1088.42	4.5	7.32e-04	3.05e-06	1.63e-04	0.0	0.0	0.0
Risulta				1.888e+04		156.30		2.137e+04			
In percentuale				78.68		0.65		89.06			

CDC	Tipo	Sigla Id	Note
4	Edk	CDC=Ed (dinamico SLU) alfa=90.00 (ecc. +)	
			categoria suolo: C
			fattore di sito S = 1.496
			ordinata spettro (tratto Tb-Tc) = 0.508 g
			angolo di ingresso:90.00
			eccentricità aggiuntiva: positiva
			periodo proprio T1: 0.300 sec.
			fattore q: 1.000
			amplificazione ND (non dissipativi): 1.000
			fattore per spost. mu d: 1.000
			classe di duttilità CD: ND
			numero di modi considerati: 9
			combinaz. modale: CQC

Quota	M Sismica x g	Pos. GX	Pos. GY	E agg. X-X	E agg. Y-Y	Pos. KX	Pos. KY	(r/Ls)^2	rapp. ex/rx	rapp. ey/ry
cm	daN	cm	cm	cm	cm	cm	cm			
105.00	2.400e+04	165.00	600.00	20.00	0.0	165.00	600.00	1.093	0.0	0.0
Risulta	2.400e+04									

Modo	Frequenza	Periodo	Acc. Spettrale	M efficace X x g	%	M efficace Y x g	%	M efficace Z x g	%	Energia	Energia x v
	Hz	sec	g	daN		daN		daN			
1	12.024	0.083	0.353	1.63e-06	0.0	0.0	0.0	1.916e+04	79.8	0.0	0.0
2	23.454	0.043	0.281	55.00	0.2	0.0	0.0	1.77e-04	0.0	0.0	0.0
3	40.518	0.025	0.249	0.0	0.0	156.28	0.7	0.0	0.0	0.0	0.0
4	58.356	0.017	0.236	0.0	0.0	0.84	3.52e-03	0.0	0.0	0.0	0.0
5	62.164	0.016	0.234	2.71e-04	1.13e-06	0.0	0.0	0.02	9.54e-05	0.0	0.0
6	75.938	0.013	0.229	1.769e+04	73.7	0.0	0.0	0.06	2.70e-04	0.0	0.0
7	90.871	0.011	0.225	0.95	3.94e-03	3.06e-05	0.0	2213.20	9.2	0.0	0.0
8	102.167	0.010	0.223	1.42e-04	0.0	0.17	6.95e-04	3.44e-05	0.0	0.0	0.0
9	109.037	0.009	0.222	1096.38	4.6	2.83e-04	1.18e-06	0.08	3.27e-04	0.0	0.0
Risulta				1.884e+04		157.29		2.137e+04			
In				78.51		0.66		89.06			

Modo	Frequenza	Periodo	Acc. Spettrale	M efficace X x g	%	M efficace Y x g	%	M efficace Z x g	%	Energia	Energia x v
percentuale											

CDC	Tipo	Sigla Id	Note
5	Edk	CDC=Ed (dinamico SLU) alfa=90.00 (ecc. -)	
			categoria suolo: C
			fattore di sito S = 1.496
			ordinata spettro (tratto Tb-Tc) = 0.508 g
			angolo di ingresso:90.00
			eccentricità aggiuntiva: negativa
			periodo proprio T1: 0.300 sec.
			fattore q: 1.000
			amplificazione ND (non dissipativi): 1.000
			fattore per spost. mu d: 1.000
			classe di duttilità CD: ND
			numero di modi considerati: 9
			combinaz. modale: CQC

Quota	M Sismica x g	Pos. GX	Pos. GY	E agg. X-X	E agg. Y-Y	Pos. KX	Pos. KY	(r/Ls)^2	rapp. ex/rx	rapp. ey/ry
cm	daN	cm	cm	cm	cm	cm	cm			
105.00	2.400e+04	165.00	600.00	-20.00	0.0	165.00	600.00	1.093	0.0	0.0
Risulta	2.400e+04									

Modo	Frequenza	Periodo	Acc. Spettrale	M efficace X x g	%	M efficace Y x g	%	M efficace Z x g	%	Energia	Energia x v
	Hz	sec	g	daN		daN		daN			
1	12.024	0.083	0.353	1.63e-06	0.0	0.0	0.0	1.916e+04	79.8	0.0	0.0
2	23.454	0.043	0.281	55.00	0.2	0.0	0.0	1.77e-04	0.0	0.0	0.0
3	40.518	0.025	0.249	0.0	0.0	156.28	0.7	0.0	0.0	0.0	0.0
4	58.356	0.017	0.236	0.0	0.0	0.85	3.52e-03	0.0	0.0	0.0	0.0
5	62.164	0.016	0.234	2.71e-04	1.13e-06	0.0	0.0	0.02	9.54e-05	0.0	0.0
6	75.938	0.013	0.229	1.769e+04	73.7	0.0	0.0	0.06	2.71e-04	0.0	0.0
7	90.871	0.011	0.225	0.96	3.98e-03	2.03e-05	0.0	2213.23	9.2	0.0	0.0
8	102.167	0.010	0.223	9.23e-05	0.0	0.17	7.19e-04	3.88e-05	0.0	0.0	0.0
9	109.037	0.009	0.222	1096.35	4.6	2.69e-04	1.12e-06	0.08	3.46e-04	0.0	0.0
Risulta				1.884e+04		157.30		2.137e+04			
In percentuale				78.51		0.66		89.06			

CDC	Tipo	Sigla Id	Note
6	Edk	CDC=Ed (dinamico SLD) alfa=0.0 (ecc. +)	
			categoria suolo: C
			fattore di sito S = 1.500
			ordinata spettro (tratto Tb-Tc) = 0.189 g
			angolo di ingresso:0.0
			eccentricità aggiuntiva: positiva
			periodo proprio T1: 0.013 sec.
			numero di modi considerati: 9
			combinaz. modale: CQC

Quota	M Sismica x g	Pos. GX	Pos. GY	E agg. X-X	E agg. Y-Y	Pos. KX	Pos. KY	(r/Ls)^2	rapp. ex/rx	rapp. ey/ry
cm	daN	cm	cm	cm	cm	cm	cm			
105.00	2.400e+04	165.00	600.00	0.0	-60.00	165.00	600.00	1.093	0.0	0.0
Risulta	2.400e+04									

Modo	Frequenza	Periodo	Acc. Spettrale	M efficace X x g	%	M efficace Y x g	%	M efficace Z x g	%	Energia	Energia x v
	Hz	sec	g	daN		daN		daN			

Modo	Frequenza	Periodo	Acc. Spettrale	M efficace X x g	%	M efficace Y x g	%	M efficace Z x g	%	Energia	Energia x v
1	12.024	0.083	0.142	0.0	0.0	0.0	0.0	1.916e+04	79.8	0.0	0.0
2	23.454	0.043	0.110	55.04	0.2	0.0	0.0	0.0	0.0	0.0	0.0
3	40.518	0.025	0.096	0.0	0.0	156.12	0.7	0.0	0.0	0.0	0.0
4	58.352	0.017	0.090	11.89	4.95e-02	0.0	0.0	0.0	0.0	0.0	0.0
5	62.164	0.016	0.089	0.0	0.0	0.0	0.0	0.02	9.54e-05	0.0	0.0
6	75.848	0.013	0.087	1.773e+04	73.9	0.0	0.0	0.0	0.0	0.0	0.0
7	90.871	0.011	0.085	2.31e-05	0.0	7.25e-05	0.0	2213.27	9.2	0.0	0.0
8	102.167	0.010	0.084	3.01e-04	1.26e-06	0.17	7.22e-04	3.19e-05	0.0	0.0	0.0
9	108.998	0.009	0.083	1089.52	4.5	5.12e-05	0.0	2.17e-05	0.0	0.0	0.0
Risulta				1.889e+04		156.29		2.137e+04			
In percentuale				78.69		0.65		89.06			

CDC	Tipo	Sigla Id	Note
7	Edk	CDC=Ed (dinamico SLD) alfa=0.0 (ecc. -)	
			categoria suolo: C
			fattore di sito S = 1.500
			ordinata spettro (tratto Tb-Tc) = 0.189 g
			angolo di ingresso:0.0
			eccentricità aggiuntiva: negativa
			periodo proprio T1: 0.013 sec.
			numero di modi considerati: 9
			combinaz. modale: CQC

Quota	M Sismica x g	Pos. GX	Pos. GY	E agg. X-X	E agg. Y-Y	Pos. KX	Pos. KY	(r/Ls)^2	rapp. ex/rx	rapp. ey/ry
cm	daN	cm	cm	cm	cm	cm	cm			
105.00	2.400e+04	165.00	600.00	0.0	60.00	165.00	600.00	1.093	0.0	0.0
Risulta	2.400e+04									

Modo	Frequenza	Periodo	Acc. Spettrale	M efficace X x g	%	M efficace Y x g	%	M efficace Z x g	%	Energia	Energia x v
	Hz	sec	g	daN		daN		daN			
1	12.024	0.083	0.142	0.0	0.0	0.0	0.0	1.916e+04	79.8	0.0	0.0
2	23.454	0.043	0.110	55.04	0.2	0.0	0.0	0.0	0.0	0.0	0.0
3	40.518	0.025	0.096	0.0	0.0	156.12	0.7	0.0	0.0	0.0	0.0
4	58.352	0.017	0.090	11.88	4.95e-02	0.0	0.0	0.0	0.0	0.0	0.0
5	62.164	0.016	0.089	0.0	0.0	0.0	0.0	0.02	9.53e-05	0.0	0.0
6	75.848	0.013	0.087	1.773e+04	73.9	0.0	0.0	0.0	0.0	0.0	0.0
7	90.871	0.011	0.085	0.0	0.0	6.04e-06	0.0	2213.44	9.2	0.0	0.0
8	102.167	0.010	0.084	1.48e-05	0.0	0.18	7.70e-04	2.23e-05	0.0	0.0	0.0
9	108.998	0.009	0.083	1088.42	4.5	7.32e-04	3.05e-06	1.63e-04	0.0	0.0	0.0
Risulta				1.888e+04		156.30		2.137e+04			
In percentuale				78.68		0.65		89.06			

CDC	Tipo	Sigla Id	Note
8	Edk	CDC=Ed (dinamico SLD) alfa=90.00 (ecc. +)	
			categoria suolo: C
			fattore di sito S = 1.500
			ordinata spettro (tratto Tb-Tc) = 0.189 g
			angolo di ingresso:90.00
			eccentricità aggiuntiva: positiva
			periodo proprio T1: 0.300 sec.
			numero di modi considerati: 9
			combinaz. modale: CQC

Quota	M Sismica x g	Pos. GX	Pos. GY	E agg. X-X	E agg. Y-Y	Pos. KX	Pos. KY	(r/Ls)^2	rapp. ex/rx	rapp. ey/ry
cm	daN	cm	cm	cm	cm	cm	cm			
105.00	2.400e+04	165.00	600.00	20.00	0.0	165.00	600.00	1.093	0.0	0.0
Risulta	2.400e+04									

Modo	Frequenza	Periodo	Acc. Spettrale	M efficace X x g	%	M efficace Y x g	%	M efficace Z x g	%	Energia	Energia x v
	Hz	sec	g	daN		daN		daN			
1	12.024	0.083	0.142	1.63e-06	0.0	0.0	0.0	1.916e+04	79.8	0.0	0.0
2	23.454	0.043	0.110	55.00	0.2	0.0	0.0	1.77e-04	0.0	0.0	0.0
3	40.518	0.025	0.096	0.0	0.0	156.28	0.7	0.0	0.0	0.0	0.0
4	58.356	0.017	0.090	0.0	0.0	0.84	3.52e-03	0.0	0.0	0.0	0.0
5	62.164	0.016	0.089	2.71e-04	1.13e-06	0.0	0.0	0.02	9.54e-05	0.0	0.0
6	75.938	0.013	0.087	1.769e+04	73.7	0.0	0.0	0.06	2.70e-04	0.0	0.0
7	90.871	0.011	0.085	0.95	3.94e-03	3.06e-05	0.0	2213.20	9.2	0.0	0.0
8	102.167	0.010	0.084	1.42e-04	0.0	0.17	6.95e-04	3.44e-05	0.0	0.0	0.0
9	109.037	0.009	0.083	1096.38	4.6	2.83e-04	1.18e-06	0.08	3.27e-04	0.0	0.0
Risulta				1.884e+04		157.29		2.137e+04			
In percentuale				78.51		0.66		89.06			

CDC	Tipo	Sigla Id	Note
9	Edk	CDC=Ed (dinamico SLD) alfa=90.00 (ecc. -)	
			categoria suolo: C
			fattore di sito S = 1.500
			ordinata spettro (tratto Tb-Tc) = 0.189 g
			angolo di ingresso:90.00
			eccentricità aggiuntiva: negativa
			periodo proprio T1: 0.300 sec.
			numero di modi considerati: 9
			combinaz. modale: CQC

Quota	M Sismica x g	Pos. GX	Pos. GY	E agg. X-X	E agg. Y-Y	Pos. KX	Pos. KY	(r/Ls)^2	rapp. ex/rx	rapp. ey/ry
cm	daN	cm	cm	cm	cm	cm	cm			
105.00	2.400e+04	165.00	600.00	-20.00	0.0	165.00	600.00	1.093	0.0	0.0
Risulta	2.400e+04									

Modo	Frequenza	Periodo	Acc. Spettrale	M efficace X x g	%	M efficace Y x g	%	M efficace Z x g	%	Energia	Energia x v
	Hz	sec	g	daN		daN		daN			
1	12.024	0.083	0.142	1.63e-06	0.0	0.0	0.0	1.916e+04	79.8	0.0	0.0
2	23.454	0.043	0.110	55.00	0.2	0.0	0.0	1.77e-04	0.0	0.0	0.0
3	40.518	0.025	0.096	0.0	0.0	156.28	0.7	0.0	0.0	0.0	0.0
4	58.356	0.017	0.090	0.0	0.0	0.85	3.52e-03	0.0	0.0	0.0	0.0
5	62.164	0.016	0.089	2.71e-04	1.13e-06	0.0	0.0	0.02	9.54e-05	0.0	0.0
6	75.938	0.013	0.087	1.769e+04	73.7	0.0	0.0	0.06	2.71e-04	0.0	0.0
7	90.871	0.011	0.085	0.96	3.98e-03	2.03e-05	0.0	2213.23	9.2	0.0	0.0
8	102.167	0.010	0.084	9.23e-05	0.0	0.17	7.19e-04	3.88e-05	0.0	0.0	0.0
9	109.037	0.009	0.083	1096.35	4.6	2.69e-04	1.12e-06	0.08	3.46e-04	0.0	0.0
Risulta				1.884e+04		157.30		2.137e+04			
In percentuale				78.51		0.66		89.06			

23 RISULTATI ELEMENTI TIPO TRAVE

23.1 LEGENDA RISULTATI ELEMENTI TIPO TRAVE

Il controllo dei risultati delle analisi condotte, per quanto concerne gli elementi tipo trave, è possibile in relazione alle tabelle sotto riportate.

Gli elementi vengono suddivisi in relazione alle proprietà in elementi:

- tipo **pilastro**
- tipo **trave in elevazione**
- tipo **trave in fondazione**

Per ogni elemento e per ogni combinazione (o caso di carico) vengono riportati i risultati più significativi.

Per gli elementi tipo *pilastro* sono riportati in tabella i seguenti valori:

Pilas.	numero dell'elemento pilastro
Cmb	combinazione in cui si verificano i valori riportati
M3 mx/mn	momento flettente in campata M3 max (prima riga) / min (seconda riga)
M2 mx/mn	momento flettente in campata M2 max (prima riga) / min (seconda riga)
D2/D3	freccia massima in direzione 2 (prima riga) / direzione 3 (seconda riga)
Q2/Q3	carico totale in direzione 2 (prima riga) / direzione 3 (seconda riga)
Pos.	ascissa del punto iniziale e finale dell'elemento
N, V2, ecc..	sei componenti di sollecitazione al piede ed in sommità dell'elemento

Per gli elementi tipo *trave in elevazione* sono riportati, oltre al numero dell'elemento, i medesimi risultati visti per i pilastri.

Per gli elementi tipo *trave in fondazione* (trave f.) sono riportati, oltre al numero dell'elemento, i medesimi risultati visti per i pilastri e la massima pressione sul terreno.

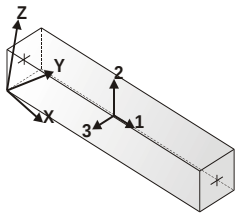

orientamento elementi 2D non verticali

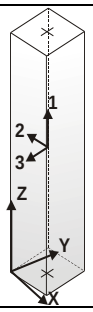

orientamento elementi 2D verticali

Trave	Cmb	M3 mx/mn	M2 mx/mn	D 2 / D 3	Q 2 / Q 3	Pos.	N	V 2	V 3	T	M 2	M 3
		daN cm	daN cm	cm	daN	cm	daN	daN	daN	daN cm	daN cm	daN cm
1	2	-2.347e+04	0.06	-0.43	-546.00	0.0	1.035e+05	2.842e+04	-2032.76	-2.136e+04	0.06	-1.712e+06
		-1.712e+06	-1.220e+05	2.34e-03	0.0	60.0	1.035e+05	2.787e+04	-2032.76	-2.136e+04	-1.220e+05	-2.347e+04
1	7	-1.820e+04	0.01	-0.12	-420.00	0.0	3.012e+04	8204.77	-575.75	-215.81	0.01	-4.979e+05
		-4.979e+05	-3.455e+04	5.71e-04	0.0	60.0	3.012e+04	7784.77	-575.75	-215.81	-3.455e+04	-1.820e+04
1	8	-1.747e+04	0.05	-0.39	-420.00	0.0	9.340e+04	2.568e+04	-1839.69	-2.127e+04	0.05	-1.546e+06
		-1.546e+06	-1.104e+05	2.15e-03	0.0	60.0	9.340e+04	2.526e+04	-1839.69	-2.127e+04	-1.104e+05	-1.747e+04
1	21	-2.681e+04	0.02	-0.12	-420.00	0.0	3.286e+04	8882.15	-627.23	-1395.07	0.02	-5.413e+05
		-5.413e+05	-3.763e+04	7.87e-04	0.0	60.0	3.286e+04	8462.15	-627.23	-1395.07	-3.763e+04	-2.681e+04
1	25	-2.681e+04	0.02	-0.12	-420.00	0.0	3.286e+04	8882.20	-627.22	-1393.76	0.02	-5.413e+05
		-5.413e+05	-3.763e+04	7.87e-04	0.0	60.0	3.286e+04	8462.20	-627.22	-1393.76	-3.763e+04	-2.681e+04
1	28	-1.204e+04	0.01	-0.12	-420.00	0.0	3.203e+04	8765.09	-616.17	886.24	0.01	-5.312e+05
		-5.312e+05	-3.697e+04	4.49e-04	0.0	60.0	3.203e+04	8345.09	-616.17	886.24	-3.697e+04	-1.204e+04
1	33	-2.626e+04	0.02	-0.12	-420.00	0.0	3.286e+04	8876.29	-625.90	-1369.16	0.02	-5.413e+05
		-5.413e+05	-3.755e+04	7.70e-04	0.0	60.0	3.286e+04	8456.29	-625.90	-1369.16	-3.755e+04	-2.626e+04
1	53	-2.222e+04	0.01	-0.12	-420.00	0.0	3.261e+04	8845.88	-623.79	-697.10	0.01	-5.381e+05
		-5.381e+05	-3.743e+04	6.82e-04	0.0	60.0	3.261e+04	8425.88	-623.79	-697.10	-3.743e+04	-2.222e+04
1	57	-2.222e+04	0.01	-0.12	-420.00	0.0	3.261e+04	8845.91	-623.79	-696.60	0.01	-5.381e+05
		-5.381e+05	-3.743e+04	6.82e-04	0.0	60.0	3.261e+04	8425.91	-623.79	-696.60	-3.743e+04	-2.222e+04
1	60	-1.663e+04	0.01	-0.12	-420.00	0.0	3.229e+04	8801.39	-619.60	189.07	0.01	-5.343e+05
		-5.343e+05	-3.718e+04	5.54e-04	0.0	60.0	3.229e+04	8381.39	-619.60	189.07	-3.718e+04	-1.663e+04
1	65	-2.201e+04	0.01	-0.12	-420.00	0.0	3.260e+04	8843.68	-623.29	-687.53	0.01	-5.382e+05
		-5.382e+05	-3.740e+04	6.75e-04	0.0	60.0	3.260e+04	8423.68	-623.29	-687.53	-3.740e+04	-2.201e+04
1	85	-1.942e+04	0.01	-0.12	-420.00	0.0	3.245e+04	8823.65	-621.69	-253.76	0.01	-5.362e+05
		-5.362e+05	-3.730e+04	6.18e-04	0.0	60.0	3.245e+04	8403.65	-621.69	-253.76	-3.730e+04	-1.942e+04
1	87	-1.824e+04	0.04	-0.30	-420.00	0.0	7.331e+04	2.012e+04	-1438.07	-1.427e+04	0.04	-1.213e+06
		-1.213e+06	-8.628e+04	1.64e-03	0.0	60.0	7.331e+04	1.970e+04	-1438.07	-1.427e+04	-8.628e+04	-1.824e+04
1	88	-1.861e+04	0.01	-0.12	-420.00	0.0	3.090e+04	8411.06	-591.07	-228.46	0.01	-5.107e+05
		-5.107e+05	-3.546e+04	5.87e-04	0.0	60.0	3.090e+04	7991.06	-591.07	-228.46	-3.546e+04	-1.861e+04
1	89	-1.812e+04	0.04	-0.30	-420.00	0.0	7.309e+04	2.006e+04	-1433.69	-1.427e+04	0.04	-1.209e+06
		-1.209e+06	-8.602e+04	1.64e-03	0.0	60.0	7.309e+04	1.964e+04	-1433.69	-1.427e+04	-8.602e+04	-1.812e+04
1	97	-1.898e+04	0.04	-0.29	-420.00	0.0	7.042e+04	1.931e+04	-1380.05	-1.289e+04	0.04	-1.165e+06
		-1.165e+06	-8.280e+04	1.57e-03	0.0	60.0	7.042e+04	1.889e+04	-1380.05	-1.289e+04	-8.280e+04	-1.898e+04
1	98	-1.937e+04	0.01	-0.12	-420.00	0.0	3.234e+04	8794.18	-619.50	-252.02	0.01	-5.344e+05
		-5.344e+05	-3.717e+04	6.16e-04	0.0	60.0	3.234e+04	8374.18	-619.50	-252.02	-3.717e+04	-1.937e+04
1	102	-1.942e+04	0.01	-0.12	-420.00	0.0	3.245e+04	8823.65	-621.69	-253.76	0.01	-5.362e+05
		-5.362e+05	-3.730e+04	6.18e-04	0.0	60.0	3.245e+04	8403.65	-621.69	-253.76	-3.730e+04	-1.942e+04
2	2	8.626e+05	-8.546e+04	-0.44	-546.00	0.0	1.242e+05	2.339e+04	608.35	-1.283e+05	-1.220e+05	-5.242e+05
		-5.242e+05	-1.220e+05	1.56e-04	0.0	60.0	1.242e+05	2.284e+04	608.35	-1.283e+05	-8.546e+04	8.626e+05
2	7	2.322e+05	-2.303e+04	-0.12	-420.00	0.0	3.559e+04	6578.06	191.84	-2.487e+04	-3.455e+04	-1.499e+05
		-1.499e+05	-3.455e+04	-2.46e-05	0.0	60.0	3.559e+04	6158.06	191.84	-2.487e+04	-2.303e+04	2.322e+05
2	21	2.446e+05	-2.551e+04	-0.13	-420.00	0.0	3.856e+04	7014.43	217.92	-2.861e+04	-3.763e+04	-1.637e+05
		-1.637e+05	-3.763e+04	1.40e-04	0.0	60.0	3.856e+04	6594.43	217.92	-2.861e+04	-2.551e+04	2.446e+05
2	28	2.560e+05	-2.426e+04	-0.13	-420.00	0.0	3.812e+04	7125.10	196.04	-2.516e+04	-3.697e+04	-1.588e+05
		-1.588e+05	-3.697e+04	-1.90e-04	0.0	60.0	3.812e+04	6705.10	196.04	-2.516e+04	-2.426e+04	2.560e+05
2	32	2.556e+05	-2.403e+04	-0.13	-420.00	0.0	3.810e+04	7117.81	194.13	-2.518e+04	-3.705e+04	-1.588e+05
		-1.588e+05	-3.705e+04	-1.74e-04	0.0	60.0	3.810e+04	6697.81	194.13	-2.518e+04	-2.403e+04	2.556e+05
2	33	2.451e+05	-2.574e+04	-0.13	-420.00	0.0	3.858e+04	7021.66	219.81	-2.859e+04	-3.755e+04	-1.637e+05
		-1.637e+05	-3.755e+04	1.24e-04	0.0	60.0	3.858e+04	6601.66	219.81	-2.859e+04	-2.574e+04	2.451e+05
2	36	2.556e+05	-2.403e+04	-0.13	-420.00	0.0	3.810e+04	7117.83	194.14	-2.518e+04	-3.705e+04	-1.588e+05
		-1.588e+05	-3.705e+04	-1.74e-04	0.0	60.0	3.810e+04	6697.83	194.14	-2.518e+04	-2.403e+04	2.556e+05
2	53	2.482e+05	-2.512e+04	-0.13	-420.00	0.0	3.842e+04	7048.81	211.12	-2.755e+04	-3.743e+04	-1.622e+05
		-1.622e+05	-3.743e+04	5.59e-05	0.0	60.0	3.842e+04	6628.81	211.12	-2.755e+04	-2.512e+04	2.482e+05
2	60	2.525e+05	-2.465e+04	-0.13	-420.00	0.0	3.826e+04	7090.69	202.84	-2.621e+04	-3.718e+04	-1.603e+05
		-1.603e+05	-3.718e+04	-8.76e-05	0.0	60.0	3.826e+04	6670.69	202.84	-2.621e+04	-2.465e+04	2.525e+05
2	64	2.523e+05	-2.456e+04	-0.13	-420.00	0.0	3.825e+04	7087.94	202.12	-2.622e+04	-3.721e+04	-1.603e+05
		-1.603e+05	-3.721e+04	-8.16e-05	0.0	60.0	3.825e+04	6667.94	202.12	-2.622e+04	-2.456e+04	2.523e+05
2	65	2.483e+05	-2.521e+04	-0.13	-420.00	0.0	3.843e+04	7051.55	211.83	-2.755e+04	-3.740e+04	-1.622e+05
		-1.622e+05	-3.740e+04	5.21e-05	0.0	60.0	3.843e+04	6631.55	211.83	-2.755e+04	-2.521e+04	2.483e+05
2	68	2.523e+05	-2.456e+04	-0.13	-420.00	0.0	3.825e+04	7087.95	202.12	-2.622e+04	-3.721e+04	-1.603e+05
		-1.603e+05	-3.721e+04	-8.16e-05	0.0	60.0	3.825e+04	6667.95	202.12	-2.622e+04	-2.456e+04	2.523e+05
2	85	2.503e+05	-2.488e+04	-0.13	-420.00	0.0	3.834e+04	7069.75	206.98	-2.688e+04	-3.730e+04	-1.613e+05
		-1.613e+05	-3.730e+04	-2.53e-05	0.0	60.0	3.834e+04	6649.75	206.98	-2.688e+04	-2.488e+04	2.503e+05
2	87	6.085e+05	-6.029e+04	-0.31	-420.00	0.0	8.790e+04	1.653e+04	433.16	-8.914e+04	-8.628e+04	-3.710e+05
		-3.710e+05	-8.628e+04	1.06e-04	0.0	60.0	8.790e+04	1.611e+04	433.16	-8.914e+04	-6.029e+04	6.085e+05
2	88	2.383e+05	-2.365e+04	-0.12	-420.00	0.0	3.651e+04	6741.95	196.89	-2.554e+04	-3.546e+04	-1.537e+05
		-1.537e+05	-3.546e+04	-2.49e-05	0.0	60.0	3.651e+04	6321.95	196.89	-2.554e+04	-2.365e+04	2.383e+05
2	97	5.820e+05	-5.770e+04	-0.30	-420.00	0.0	8.435e+04	1.584e+04	418.33	-8.395e+04	-8.280e+04	-3.559e+05
		-3.559e+05	-8.280e+04	9.89e-05	0.0	60.0	8.435e+04	1.542e+04	418.33	-8.395e+04	-5.770e+04	5.820e+05
2	98	2.495e+05	-2.479e+04	-0.13	-420.00	0.0	3.821e+04	7046.33	206.26	-2.679e+04	-3.717e+04	-1.607e+05
		-1.607e+05	-3.717e+04	-2.53e-05	0.0	60.0	3.821e+04	6626.33	206.26	-2.679e+04	-2.479e+04	2.495e+05
2	102	2.503e+05	-2.488e+04	-0.13	-420.00	0.0	3.834e+04	7069.75	206.98	-2.688e+04	-3.730e+04	-1.613e+05
		-1.613e+05	-3.730e+04	-2.53e-05	0.0	60.0	3.834e+04	6649.75	206.98	-2.688e+04	-2.488e+04	2.503e+05

Trave	Cmb	M3 mx/mn	M2 mx/mn	D 2 / D 3	Q 2 / Q 3	Pos.	N	V 2	V 3	T	M 2	M 3
3	2	1.413e+06	-4.684e+04	-0.42	-546.00	0.0	1.567e+05	2.213e+04	643.75	-1.468e+05	-8.546e+04	1.013e+05
		1.013e+05	-8.546e+04	-8.70e-04	0.0	60.0	1.567e+05	2.159e+04	643.75	-1.468e+05	-4.684e+04	1.413e+06
3	7	3.752e+05	-1.113e+04	-0.11	-420.00	0.0	4.417e+04	5930.40	198.46	-2.705e+04	-2.303e+04	3.200e+04
		3.200e+04	-2.303e+04	-2.54e-04	0.0	60.0	4.417e+04	5510.40	198.46	-2.705e+04	-1.113e+04	3.752e+05
3	19	3.752e+05	-1.113e+04	-0.11	-420.00	0.0	4.417e+04	5930.40	198.46	-2.705e+04	-2.304e+04	3.200e+04
		3.200e+04	-2.304e+04	-2.54e-04	0.0	60.0	4.417e+04	5510.40	198.46	-2.705e+04	-1.113e+04	3.752e+05
3	28	4.091e+05	-1.141e+04	-0.12	-420.00	0.0	4.742e+04	6415.82	220.98	-2.746e+04	-2.426e+04	3.683e+04
		3.683e+04	-2.426e+04	-4.41e-04	0.0	60.0	4.742e+04	5995.82	220.98	-2.746e+04	-1.141e+04	4.091e+05
3	29	3.999e+05	-1.279e+04	-0.12	-420.00	0.0	4.776e+04	6333.68	209.27	-3.100e+04	-2.574e+04	3.246e+04
		3.246e+04	-2.574e+04	-1.18e-04	0.0	60.0	4.776e+04	5913.68	209.27	-3.100e+04	-1.279e+04	3.999e+05
3	32	4.088e+05	-1.127e+04	-0.12	-420.00	0.0	4.741e+04	6409.67	219.10	-2.747e+04	-2.403e+04	3.683e+04
		3.683e+04	-2.403e+04	-4.28e-04	0.0	60.0	4.741e+04	5989.67	219.10	-2.747e+04	-1.127e+04	4.088e+05
3	33	3.999e+05	-1.279e+04	-0.12	-420.00	0.0	4.776e+04	6333.66	209.27	-3.100e+04	-2.574e+04	3.246e+04
		3.246e+04	-2.574e+04	-1.18e-04	0.0	60.0	4.776e+04	5913.66	209.27	-3.100e+04	-1.279e+04	3.999e+05
3	36	4.088e+05	-1.127e+04	-0.12	-420.00	0.0	4.741e+04	6409.69	219.10	-2.747e+04	-2.403e+04	3.683e+04
		3.683e+04	-2.403e+04	-4.28e-04	0.0	60.0	4.741e+04	5989.69	219.10	-2.747e+04	-1.127e+04	4.088e+05
3	60	4.061e+05	-1.180e+04	-0.12	-420.00	0.0	4.752e+04	6388.39	216.76	-2.854e+04	-2.465e+04	3.547e+04
		3.547e+04	-2.465e+04	-3.36e-04	0.0	60.0	4.752e+04	5968.39	216.76	-2.854e+04	-1.180e+04	4.061e+05
3	61	4.027e+05	-1.232e+04	-0.12	-420.00	0.0	4.765e+04	6357.29	212.32	-2.992e+04	-2.521e+04	3.382e+04
		3.382e+04	-2.521e+04	-2.14e-04	0.0	60.0	4.765e+04	5937.29	212.32	-2.992e+04	-1.232e+04	4.027e+05
3	64	4.060e+05	-1.174e+04	-0.12	-420.00	0.0	4.752e+04	6386.06	216.05	-2.854e+04	-2.456e+04	3.547e+04
		3.547e+04	-2.456e+04	-3.31e-04	0.0	60.0	4.752e+04	5966.06	216.05	-2.854e+04	-1.174e+04	4.060e+05
3	65	4.027e+05	-1.232e+04	-0.12	-420.00	0.0	4.765e+04	6357.28	212.32	-2.992e+04	-2.521e+04	3.382e+04
		3.382e+04	-2.521e+04	-2.14e-04	0.0	60.0	4.765e+04	5937.28	212.32	-2.992e+04	-1.232e+04	4.027e+05
3	68	4.060e+05	-1.175e+04	-0.12	-420.00	0.0	4.752e+04	6386.07	216.05	-2.854e+04	-2.456e+04	3.547e+04
		3.547e+04	-2.456e+04	-3.31e-04	0.0	60.0	4.752e+04	5966.07	216.05	-2.854e+04	-1.175e+04	4.060e+05
3	85	4.043e+05	-1.203e+04	-0.12	-420.00	0.0	4.758e+04	6371.68	214.19	-2.923e+04	-2.488e+04	3.465e+04
		3.465e+04	-2.488e+04	-2.73e-04	0.0	60.0	4.758e+04	5951.68	214.19	-2.923e+04	-1.203e+04	4.043e+05
3	87	9.959e+05	-3.283e+04	-0.30	-420.00	0.0	1.108e+05	1.561e+04	457.73	-1.018e+05	-6.029e+04	7.214e+04
		7.214e+04	-6.029e+04	-6.16e-04	0.0	60.0	1.108e+05	1.519e+04	457.73	-1.018e+05	-3.283e+04	9.959e+05
3	88	3.849e+05	-1.143e+04	-0.12	-420.00	0.0	4.531e+04	6077.49	203.70	-2.778e+04	-2.365e+04	3.288e+04
		3.288e+04	-2.365e+04	-2.60e-04	0.0	60.0	4.531e+04	5657.49	203.70	-2.778e+04	-1.143e+04	3.849e+05
3	94	3.849e+05	-1.143e+04	-0.12	-420.00	0.0	4.531e+04	6077.50	203.70	-2.778e+04	-2.365e+04	3.288e+04
		3.288e+04	-2.365e+04	-2.60e-04	0.0	60.0	4.531e+04	5657.50	203.70	-2.778e+04	-1.143e+04	3.849e+05
3	97	9.517e+05	-3.122e+04	-0.29	-420.00	0.0	1.063e+05	1.491e+04	441.46	-9.566e+04	-5.770e+04	6.975e+04
		6.975e+04	-5.770e+04	-5.92e-04	0.0	60.0	1.063e+05	1.449e+04	441.46	-9.566e+04	-3.122e+04	9.517e+05
3	98	4.030e+05	-1.199e+04	-0.12	-420.00	0.0	4.742e+04	6350.66	213.44	-2.913e+04	-2.479e+04	3.452e+04
		3.452e+04	-2.479e+04	-2.72e-04	0.0	60.0	4.742e+04	5930.66	213.44	-2.913e+04	-1.199e+04	4.030e+05
3	101	4.030e+05	-1.199e+04	-0.12	-420.00	0.0	4.742e+04	6350.66	213.44	-2.913e+04	-2.480e+04	3.452e+04
		3.452e+04	-2.480e+04	-2.72e-04	0.0	60.0	4.742e+04	5930.66	213.44	-2.913e+04	-1.199e+04	4.030e+05
3	102	4.043e+05	-1.203e+04	-0.12	-420.00	0.0	4.758e+04	6371.68	214.19	-2.923e+04	-2.488e+04	3.465e+04
		3.465e+04	-2.488e+04	-2.73e-04	0.0	60.0	4.758e+04	5951.68	214.19	-2.923e+04	-1.203e+04	4.043e+05
4	2	1.863e+06	-2.184e+04	-0.40	-546.00	0.0	1.899e+05	2.074e+04	416.69	-1.426e+05	-4.684e+04	6.352e+05
		6.352e+05	-4.684e+04	-1.24e-03	0.0	60.0	1.899e+05	2.019e+04	416.69	-1.426e+05	-2.184e+04	1.863e+06
4	7	4.798e+05	-3348.75	-0.11	-420.00	0.0	5.246e+04	5185.47	129.64	-2.534e+04	-1.113e+04	1.813e+05
		1.813e+05	-1.113e+04	-3.34e-04	0.0	60.0	5.246e+04	4765.47	129.64	-2.534e+04	-3348.75	4.798e+05
4	19	4.798e+05	-3349.01	-0.11	-420.00	0.0	5.246e+04	5185.48	129.64	-2.534e+04	-1.113e+04	1.813e+05
		1.813e+05	-1.113e+04	-3.34e-04	0.0	60.0	5.246e+04	4765.48	129.64	-2.534e+04	-3349.01	4.798e+05
4	24	5.208e+05	-2592.54	-0.11	-420.00	0.0	5.627e+04	5603.23	154.30	-2.565e+04	-1.141e+04	1.938e+05
		1.938e+05	-1.141e+04	-5.25e-04	0.0	60.0	5.627e+04	5183.23	154.30	-2.565e+04	-2592.54	5.208e+05
4	25	5.131e+05	-4659.41	-0.11	-420.00	0.0	5.674e+04	5535.06	125.47	-2.909e+04	-1.265e+04	1.971e+05
		1.971e+05	-1.265e+04	-1.94e-04	0.0	60.0	5.674e+04	5115.06	125.47	-2.909e+04	-4659.41	5.131e+05
4	27	5.199e+05	-2594.18	-0.11	-420.00	0.0	5.633e+04	5598.53	154.38	-2.567e+04	-1.143e+04	1.931e+05
		1.931e+05	-1.143e+04	-5.25e-04	0.0	60.0	5.633e+04	5178.53	154.38	-2.567e+04	-2594.18	5.199e+05
4	28	5.208e+05	-2617.73	-0.11	-420.00	0.0	5.627e+04	5603.24	154.30	-2.565e+04	-1.141e+04	1.938e+05
		1.938e+05	-1.141e+04	-5.25e-04	0.0	60.0	5.627e+04	5183.24	154.30	-2.565e+04	-2617.73	5.208e+05
4	29	5.134e+05	-4302.13	-0.11	-420.00	0.0	5.670e+04	5539.16	126.96	-2.910e+04	-1.279e+04	1.971e+05
		1.971e+05	-1.279e+04	-2.02e-04	0.0	60.0	5.670e+04	5119.16	126.96	-2.910e+04	-4302.13	5.134e+05
4	56	5.185e+05	-3243.42	-0.11	-420.00	0.0	5.642e+04	5582.05	145.34	-2.670e+04	-1.180e+04	1.948e+05
		1.948e+05	-1.180e+04	-4.22e-04	0.0	60.0	5.642e+04	5162.05	145.34	-2.670e+04	-3243.42	5.185e+05
4	57	5.155e+05	-4024.11	-0.11	-420.00	0.0	5.659e+04	5556.25	134.43	-2.804e+04	-1.226e+04	1.961e+05
		1.961e+05	-1.226e+04	-2.97e-04	0.0	60.0	5.659e+04	5136.25	134.43	-2.804e+04	-4024.11	5.155e+05
4	59	5.181e+05	-3244.05	-0.11	-420.00	0.0	5.644e+04	5580.25	145.37	-2.671e+04	-1.181e+04	1.946e+05
		1.946e+05	-1.181e+04	-4.22e-04	0.0	60.0	5.644e+04	5160.25	145.37	-2.671e+04	-3244.05	5.181e+05
4	60	5.185e+05	-3253.02	-0.11	-420.00	0.0	5.642e+04	5582.05	145.34	-2.670e+04	-1.180e+04	1.948e+05
		1.948e+05	-1.180e+04	-4.22e-04	0.0	60.0	5.642e+04	5162.05	145.34	-2.670e+04	-3253.02	5.185e+05
4	61	5.156e+05	-3889.26	-0.11	-420.00	0.0	5.658e+04	5557.80	135.00	-2.804e+04	-1.232e+04	1.960e+05
		1.960e+05	-1.232e+04	-3.00e-04	0.0	60.0	5.658e+04	5137.80	135.00	-2.804e+04	-3889.26	5.156e+05
4	85	5.170e+05	-3638.57	-0.11	-420.00	0.0	5.650e+04	5569.15	139.89	-2.737e+04	-1.203e+04	1.954e+05
		1.954e+05	-1.203e+04	-3.59e-04	0.0	60.0	5.650e+04	5149.15	139.89	-2.737e+04	-3638.57	5.170e+05
4	87	1.311e+06	-1.504e+04	-0.28	-420.00	0.0	1.341e+05	1.457e+04	296.44	-9.869e+04	-3.283e+04	4.496e+05
		4.496e+05	-3.283e+04	-8.74e-04	0.0	60.0	1.341e+05	1.415e+04	296.44	-9.869e+04	-1.504e+04	1.311e+06
4	88	4.922e+05	-3445.35	-0.11	-420.00	0.0	5.381e+04	5313.36	133.05	-2.602e+04	-1.143e+04	1.860e+05
		1.860e+05	-1.143e+04	-3.42e-04	0.0	60.0	5.381e+04	4893.36	133.05	-2.602e+04	-3445.35	4.922e+05
4	94	4.922e+05	-3445.53	-0.11	-420.00	0.0	5.381e+04	5313.37	133.06	-2.601e+04	-1.143e+04	1.860e+05

Trave	Cmb	M3 mx/mn	M2 mx/mn	D 2 / D 3	Q 2 / Q 3	Pos.	N	V 2	V 3	T	M 2	M 3
		1.860e+05	-1.143e+04	-3.42e-04	0.0	60.0	5.381e+04	4893.37	133.06	-2.601e+04	-3445.53	4.922e+05
4	97	1.251e+06	-1.405e+04	-0.27	-420.00	0.0	1.284e+05	1.386e+04	286.06	-9.260e+04	-3.122e+04	4.314e+05
		4.314e+05	-3.122e+04	-8.35e-04	0.0	60.0	1.284e+05	1.344e+04	286.06	-9.260e+04	-1.405e+04	1.251e+06
4	98	5.152e+05	-3624.75	-0.11	-420.00	0.0	5.631e+04	5550.88	139.40	-2.727e+04	-1.199e+04	1.948e+05
		1.948e+05	-1.199e+04	-3.58e-04	0.0	60.0	5.631e+04	5130.88	139.40	-2.727e+04	-3624.75	5.152e+05
4	101	5.152e+05	-3624.84	-0.11	-420.00	0.0	5.631e+04	5550.88	139.40	-2.727e+04	-1.199e+04	1.948e+05
		1.948e+05	-1.199e+04	-3.58e-04	0.0	60.0	5.631e+04	5130.88	139.40	-2.727e+04	-3624.84	5.152e+05
4	102	5.170e+05	-3638.57	-0.11	-420.00	0.0	5.650e+04	5569.15	139.89	-2.737e+04	-1.203e+04	1.954e+05
		1.954e+05	-1.203e+04	-3.59e-04	0.0	60.0	5.650e+04	5149.15	139.89	-2.737e+04	-3638.57	5.170e+05
5	1	7.508e+05	1083.09	-0.13	-546.00	0.0	7.968e+04	5903.73	92.75	-2.975e+04	-4481.78	4.129e+05
		4.129e+05	-4481.78	-4.44e-04	0.0	60.0	7.968e+04	5357.73	92.75	-2.975e+04	1083.09	7.508e+05
5	2	2.274e+06	-7683.52	-0.35	-546.00	0.0	2.214e+05	1.943e+04	235.91	-1.264e+05	-2.184e+04	1.124e+06
		1.124e+06	-2.184e+04	-1.28e-03	0.0	60.0	2.214e+05	1.888e+04	235.91	-1.264e+05	-7683.52	2.274e+06
5	7	5.627e+05	819.72	-0.10	-420.00	0.0	5.973e+04	4430.47	69.47	-2.228e+04	-3348.75	3.095e+05
		3.095e+05	-3348.75	-3.33e-04	0.0	60.0	5.973e+04	4010.47	69.47	-2.228e+04	819.72	5.627e+05
5	19	5.627e+05	819.63	-0.10	-420.00	0.0	5.973e+04	4430.48	69.48	-2.227e+04	-3349.02	3.095e+05
		3.095e+05	-3349.02	-3.33e-04	0.0	60.0	5.973e+04	4010.48	69.48	-2.227e+04	819.63	5.627e+05
5	21	6.035e+05	-1010.59	-0.10	-420.00	0.0	6.408e+04	4729.04	58.72	-2.579e+04	-4684.60	3.350e+05
		3.350e+05	-4684.60	-2.03e-04	0.0	60.0	6.408e+04	4309.04	58.72	-2.579e+04	-1010.59	6.035e+05
5	24	6.090e+05	2728.94	-0.10	-420.00	0.0	6.459e+04	4782.77	91.20	-2.232e+04	-2592.55	3.320e+05
		3.320e+05	-2592.55	-5.13e-04	0.0	60.0	6.459e+04	4362.77	91.20	-2.232e+04	2728.94	6.090e+05
5	26	6.044e+05	-1008.88	-0.10	-420.00	0.0	6.402e+04	4730.66	58.69	-2.579e+04	-4682.96	3.358e+05
		3.358e+05	-4682.96	-2.03e-04	0.0	60.0	6.402e+04	4310.66	58.69	-2.579e+04	-1008.88	6.044e+05
5	27	6.081e+05	2727.23	-0.10	-420.00	0.0	6.465e+04	4781.16	91.24	-2.233e+04	-2594.19	3.312e+05
		3.312e+05	-2594.19	-5.13e-04	0.0	60.0	6.465e+04	4361.16	91.24	-2.233e+04	2727.23	6.081e+05
5	28	6.090e+05	2701.90	-0.10	-420.00	0.0	6.459e+04	4782.77	91.20	-2.232e+04	-2617.74	3.320e+05
		3.320e+05	-2617.74	-5.13e-04	0.0	60.0	6.459e+04	4362.77	91.20	-2.232e+04	2701.90	6.090e+05
5	53	6.052e+05	152.02	-0.10	-420.00	0.0	6.424e+04	4745.76	68.82	-2.473e+04	-4033.73	3.341e+05
		3.341e+05	-4033.73	-2.99e-04	0.0	60.0	6.424e+04	4325.76	68.82	-2.473e+04	152.02	6.052e+05
5	56	6.073e+05	1566.33	-0.10	-420.00	0.0	6.443e+04	4766.05	81.10	-2.338e+04	-3243.42	3.330e+05
		3.330e+05	-3243.42	-4.17e-04	0.0	60.0	6.443e+04	4346.05	81.10	-2.338e+04	1566.33	6.073e+05
5	58	6.056e+05	152.67	-0.10	-420.00	0.0	6.421e+04	4746.38	68.81	-2.473e+04	-4033.09	3.344e+05
		3.344e+05	-4033.09	-2.99e-04	0.0	60.0	6.421e+04	4326.38	68.81	-2.473e+04	152.67	6.056e+05
5	59	6.070e+05	1565.68	-0.10	-420.00	0.0	6.445e+04	4765.43	81.12	-2.338e+04	-3244.05	3.326e+05
		3.326e+05	-3244.05	-4.17e-04	0.0	60.0	6.445e+04	4345.43	81.12	-2.338e+04	1565.68	6.070e+05
5	60	6.073e+05	1556.02	-0.10	-420.00	0.0	6.443e+04	4766.05	81.10	-2.338e+04	-3253.03	3.330e+05
		3.330e+05	-3253.03	-4.17e-04	0.0	60.0	6.443e+04	4346.05	81.10	-2.338e+04	1556.02	6.073e+05
5	85	6.063e+05	859.17	-0.10	-420.00	0.0	6.433e+04	4755.91	74.96	-2.406e+04	-3638.57	3.335e+05
		3.335e+05	-3638.57	-3.58e-04	0.0	60.0	6.433e+04	4335.91	74.96	-2.406e+04	859.17	6.063e+05
5	86	5.814e+05	836.61	-0.10	-420.00	0.0	6.170e+04	4569.94	71.83	-2.304e+04	-3473.00	3.198e+05
		3.198e+05	-3473.00	-3.43e-04	0.0	60.0	6.170e+04	4149.94	71.83	-2.304e+04	836.61	5.814e+05
5	87	1.597e+06	-5007.79	-0.25	-420.00	0.0	1.562e+05	1.359e+04	167.27	-8.746e+04	-1.504e+04	7.940e+05
		7.940e+05	-1.504e+04	-9.02e-04	0.0	60.0	1.562e+05	1.317e+04	167.27	-8.746e+04	-5007.79	1.597e+06
5	88	5.772e+05	832.87	-0.10	-420.00	0.0	6.126e+04	4538.95	71.30	-2.287e+04	-3445.36	3.175e+05
		3.175e+05	-3445.36	-3.41e-04	0.0	60.0	6.126e+04	4118.95	71.30	-2.287e+04	832.87	5.772e+05
5	94	5.772e+05	832.81	-0.10	-420.00	0.0	6.126e+04	4538.95	71.31	-2.287e+04	-3445.54	3.175e+05
		3.175e+05	-3445.54	-3.41e-04	0.0	60.0	6.126e+04	4118.95	71.31	-2.287e+04	832.81	5.772e+05
5	96	6.063e+05	859.17	-0.10	-420.00	0.0	6.433e+04	4755.91	74.96	-2.406e+04	-3638.57	3.335e+05
		3.335e+05	-3638.57	-3.58e-04	0.0	60.0	6.433e+04	4335.91	74.96	-2.406e+04	859.17	6.063e+05
5	97	1.520e+06	-4400.79	-0.24	-420.00	0.0	1.494e+05	1.287e+04	160.86	-8.204e+04	-1.405e+04	7.603e+05
		7.603e+05	-1.405e+04	-8.60e-04	0.0	60.0	1.494e+05	1.245e+04	160.86	-8.204e+04	-4400.79	1.520e+06
5	98	6.042e+05	857.30	-0.10	-420.00	0.0	6.411e+04	4740.41	74.70	-2.397e+04	-3624.75	3.324e+05
		3.324e+05	-3624.75	-3.57e-04	0.0	60.0	6.411e+04	4320.41	74.70	-2.397e+04	857.30	6.042e+05
5	101	6.042e+05	857.27	-0.10	-420.00	0.0	6.411e+04	4740.41	74.70	-2.397e+04	-3624.84	3.324e+05
		3.324e+05	-3624.84	-3.57e-04	0.0	60.0	6.411e+04	4320.41	74.70	-2.397e+04	857.27	6.042e+05
5	102	6.063e+05	859.17	-0.10	-420.00	0.0	6.433e+04	4755.91	74.96	-2.406e+04	-3638.57	3.335e+05
		3.335e+05	-3638.57	-3.58e-04	0.0	60.0	6.433e+04	4335.91	74.96	-2.406e+04	859.17	6.063e+05
6	1	8.371e+05	3550.50	-0.11	-546.00	0.0	8.782e+04	4889.33	41.12	-2.499e+04	1083.08	5.601e+05
		5.601e+05	1083.08	-3.88e-04	0.0	60.0	8.782e+04	4343.33	41.12	-2.499e+04	3550.50	8.371e+05
6	2	2.665e+06	-266.55	-0.30	-546.00	0.0	2.504e+05	1.813e+04	123.62	-1.020e+05	-7683.53	1.594e+06
		1.594e+06	-7683.53	-1.13e-03	0.0	60.0	2.504e+05	1.758e+04	123.62	-1.020e+05	-266.55	2.665e+06
6	7	6.274e+05	2667.80	-0.08	-420.00	0.0	6.582e+04	3670.13	30.80	-1.871e+04	819.71	4.197e+05
		4.197e+05	819.71	-2.91e-04	0.0	60.0	6.582e+04	3250.13	30.80	-1.871e+04	2667.80	6.274e+05
6	19	6.274e+05	2667.84	-0.08	-420.00	0.0	6.582e+04	3670.14	30.80	-1.871e+04	819.62	4.197e+05
		4.197e+05	819.62	-2.91e-04	0.0	60.0	6.582e+04	3250.14	30.80	-1.871e+04	2667.84	6.274e+05
6	20	2.456e+06	-1149.21	-0.27	-420.00	0.0	2.284e+05	1.691e+04	113.30	-9.573e+04	-7946.98	1.454e+06
		1.454e+06	-7946.98	-1.03e-03	0.0	60.0	2.284e+05	1.649e+04	113.30	-9.573e+04	-1149.21	2.456e+06
6	21	6.768e+05	122.94	-0.09	-420.00	0.0	7.057e+04	3910.66	17.43	-2.195e+04	-1010.59	4.534e+05
		4.534e+05	-1010.59	-1.76e-04	0.0	60.0	7.057e+04	3490.66	17.43	-2.195e+04	122.94	6.768e+05
6	24	6.750e+05	5584.55	-0.09	-420.00	0.0	7.123e+04	3963.23	49.06	-1.846e+04	2728.93	4.512e+05
		4.512e+05	2728.93	-4.50e-04	0.0	60.0	7.123e+04	3543.23	49.06	-1.846e+04	5584.55	6.750e+05
6	26	6.776e+05	124.54	-0.09	-420.00	0.0	7.051e+04	3912.28	17.41	-2.195e+04	-1008.89	4.544e+05
		4.544e+05	-1008.89	-1.76e-04	0.0	60.0	7.051e+04	3492.28	17.41	-2.195e+04	124.54	6.776e+05
6	27	6.742e+05	5582.94	-0.09	-420.00	0.0	7.129e+04	3961.60	49.08	-1.846e+04	2727.22	4.502e+05
		4.502e+05	2727.22	-4.50e-04	0.0	60.0	7.129e+04	3541.60	49.08	-1.846e+04	5582.94	6.742e+05

Trave	Cmb	M3 mx/mn	M2 mx/mn	D 2 / D 3	Q 2 / Q 3	Pos.	N	V 2	V 3	T	M 2	M 3
6	46	6.777e+05	1997.99	-0.09	-420.00	0.0	7.070e+04	3932.03	28.46	-2.069e+04	260.33	4.543e+05
		4.543e+05	260.33	-2.72e-04	0.0	60.0	7.070e+04	3512.03	28.46	-2.069e+04	1997.99	6.777e+05
6	53	6.763e+05	1820.80	-0.09	-420.00	0.0	7.078e+04	3927.04	27.27	-2.087e+04	152.01	4.527e+05
		4.527e+05	152.01	-2.61e-04	0.0	60.0	7.078e+04	3507.04	27.27	-2.087e+04	1820.80	6.763e+05
6	56	6.756e+05	3886.69	-0.09	-420.00	0.0	7.103e+04	3946.85	39.22	-1.953e+04	1566.33	4.519e+05
		4.519e+05	1566.33	-3.65e-04	0.0	60.0	7.103e+04	3526.85	39.22	-1.953e+04	3886.69	6.756e+05
6	58	6.766e+05	1821.42	-0.09	-420.00	0.0	7.076e+04	3927.67	27.26	-2.087e+04	152.66	4.531e+05
		4.531e+05	152.66	-2.61e-04	0.0	60.0	7.076e+04	3507.67	27.26	-2.087e+04	1821.42	6.766e+05
6	59	6.753e+05	3886.07	-0.09	-420.00	0.0	7.105e+04	3946.22	39.23	-1.953e+04	1565.67	4.515e+05
		4.515e+05	1565.67	-3.65e-04	0.0	60.0	7.105e+04	3526.22	39.23	-1.953e+04	3886.07	6.753e+05
6	78	6.766e+05	2529.95	-0.09	-420.00	0.0	7.082e+04	3935.11	31.44	-2.039e+04	632.57	4.531e+05
		4.531e+05	632.57	-2.97e-04	0.0	60.0	7.082e+04	3515.11	31.44	-2.039e+04	2529.95	6.766e+05
6	85	6.759e+05	2853.74	-0.09	-420.00	0.0	7.090e+04	3936.94	33.24	-2.020e+04	859.17	4.523e+05
		4.523e+05	859.17	-3.13e-04	0.0	60.0	7.090e+04	3516.94	33.24	-2.020e+04	2853.74	6.759e+05
6	86	6.482e+05	2747.50	-0.08	-420.00	0.0	6.800e+04	3784.48	31.85	-1.935e+04	836.61	4.337e+05
		4.337e+05	836.61	-3.00e-04	0.0	60.0	6.800e+04	3364.48	31.85	-1.935e+04	2747.50	6.482e+05
6	87	1.867e+06	202.80	-0.21	-420.00	0.0	1.764e+05	1.261e+04	86.84	-7.070e+04	-5007.80	1.123e+06
		1.123e+06	-5007.80	-7.94e-04	0.0	60.0	1.764e+05	1.219e+04	86.84	-7.070e+04	202.80	1.867e+06
6	88	6.435e+05	2729.78	-0.08	-420.00	0.0	6.752e+04	3759.07	31.62	-1.921e+04	832.86	4.306e+05
		4.306e+05	832.86	-2.98e-04	0.0	60.0	6.752e+04	3339.07	31.62	-1.921e+04	2729.78	6.435e+05
6	94	6.435e+05	2729.81	-0.08	-420.00	0.0	6.752e+04	3759.07	31.62	-1.921e+04	832.80	4.306e+05
		4.306e+05	832.80	-2.98e-04	0.0	60.0	6.752e+04	3339.07	31.62	-1.921e+04	2729.81	6.435e+05
6	95	1.862e+06	185.11	-0.21	-420.00	0.0	1.759e+05	1.259e+04	86.61	-7.055e+04	-5011.60	1.120e+06
		1.120e+06	-5011.60	-7.92e-04	0.0	60.0	1.759e+05	1.217e+04	86.61	-7.055e+04	185.11	1.862e+06
6	96	6.759e+05	2853.74	-0.09	-420.00	0.0	7.090e+04	3936.94	33.24	-2.020e+04	859.17	4.523e+05
		4.523e+05	859.17	-3.13e-04	0.0	60.0	7.090e+04	3516.94	33.24	-2.020e+04	2853.74	6.759e+05
6	97	1.773e+06	563.51	-0.20	-420.00	0.0	1.685e+05	1.188e+04	82.74	-6.641e+04	-4400.80	1.073e+06
		1.073e+06	-4400.80	-7.58e-04	0.0	60.0	1.685e+05	1.146e+04	82.74	-6.641e+04	563.51	1.773e+06
6	98	6.736e+05	2844.89	-0.09	-420.00	0.0	7.066e+04	3924.24	33.13	-2.013e+04	857.30	4.508e+05
		4.508e+05	857.30	-3.12e-04	0.0	60.0	7.066e+04	3504.24	33.13	-2.013e+04	2844.89	6.736e+05
6	101	6.736e+05	2844.90	-0.09	-420.00	0.0	7.066e+04	3924.24	33.13	-2.013e+04	857.27	4.508e+05
		4.508e+05	857.27	-3.12e-04	0.0	60.0	7.066e+04	3504.24	33.13	-2.013e+04	2844.90	6.736e+05
6	102	6.759e+05	2853.74	-0.09	-420.00	0.0	7.090e+04	3936.94	33.24	-2.020e+04	859.17	4.523e+05
		4.523e+05	859.17	-3.13e-04	0.0	60.0	7.090e+04	3516.94	33.24	-2.020e+04	2853.74	6.759e+05
7	1	8.999e+05	4345.01	-0.09	-546.00	0.0	9.435e+04	3869.12	13.24	-1.987e+04	3550.49	6.842e+05
		6.842e+05	3550.49	-3.09e-04	0.0	60.0	9.435e+04	3323.12	13.24	-1.987e+04	4345.01	8.999e+05
7	2	2.838e+06	2804.53	-0.24	-546.00	0.0	2.737e+05	1.223e+04	51.18	-7.033e+04	-266.56	2.121e+06
		2.121e+06	-266.56	-8.49e-04	0.0	60.0	2.737e+05	1.168e+04	51.18	-7.033e+04	2804.53	2.838e+06
7	7	6.745e+05	3262.61	-0.07	-420.00	0.0	7.071e+04	2905.44	9.91	-1.488e+04	2667.80	5.128e+05
		5.128e+05	2667.80	-2.31e-04	0.0	60.0	7.071e+04	2485.44	9.91	-1.488e+04	3262.61	6.745e+05
7	8	2.613e+06	1722.13	-0.21	-420.00	0.0	2.500e+05	1.127e+04	47.86	-6.535e+04	-1149.25	1.949e+06
		1.949e+06	-1149.25	-7.72e-04	0.0	60.0	2.500e+05	1.085e+04	47.86	-6.535e+04	1722.13	2.613e+06
7	21	7.275e+05	122.94	-0.07	-420.00	0.0	7.578e+04	3084.97	-3.14	-1.771e+04	122.94	5.533e+05
		5.533e+05	1.64	-1.38e-04	0.0	60.0	7.578e+04	2664.97	-3.14	-1.771e+04	1.64	7.275e+05
7	24	7.258e+05	6991.41	-0.07	-420.00	0.0	7.656e+04	3141.61	24.56	-1.441e+04	5584.54	5.516e+05
		5.516e+05	5584.54	-3.61e-04	0.0	60.0	7.656e+04	2721.61	24.56	-1.441e+04	6991.41	7.258e+05
7	26	7.282e+05	124.54	-0.07	-420.00	0.0	7.573e+04	3089.68	-3.14	-1.771e+04	124.54	5.542e+05
		5.542e+05	2.99	-1.37e-04	0.0	60.0	7.573e+04	2669.68	-3.14	-1.771e+04	2.99	7.282e+05
7	27	7.252e+05	6990.06	-0.07	-420.00	0.0	7.661e+04	3136.89	24.57	-1.441e+04	5582.94	5.507e+05
		5.507e+05	5582.94	-3.61e-04	0.0	60.0	7.661e+04	2716.89	24.57	-1.441e+04	6990.06	7.252e+05
7	34	7.282e+05	668.50	-0.07	-420.00	0.0	7.579e+04	3088.45	-4.33	-1.764e+04	668.50	5.543e+05
		5.543e+05	465.63	-1.29e-04	0.0	60.0	7.579e+04	2668.45	-4.33	-1.764e+04	465.63	7.282e+05
7	51	7.253e+05	4437.46	-0.07	-420.00	0.0	7.637e+04	3113.57	15.14	-1.565e+04	3546.30	5.505e+05
		5.505e+05	3546.30	-2.86e-04	0.0	60.0	7.637e+04	2693.57	15.14	-1.565e+04	4437.46	7.253e+05
7	53	7.270e+05	2174.65	-0.07	-420.00	0.0	7.602e+04	3102.62	5.48	-1.669e+04	1820.80	5.528e+05
		5.528e+05	1820.80	-2.07e-04	0.0	60.0	7.602e+04	2682.62	5.48	-1.669e+04	2174.65	7.270e+05
7	56	7.264e+05	4818.40	-0.07	-420.00	0.0	7.632e+04	3123.95	15.95	-1.543e+04	3886.68	5.522e+05
		5.522e+05	3886.68	-2.91e-04	0.0	60.0	7.632e+04	2703.95	15.95	-1.543e+04	4818.40	7.264e+05
7	58	7.272e+05	2175.16	-0.07	-420.00	0.0	7.600e+04	3104.43	5.48	-1.669e+04	1821.41	5.532e+05
		5.532e+05	1821.41	-2.07e-04	0.0	60.0	7.600e+04	2684.43	5.48	-1.669e+04	2175.16	7.272e+05
7	59	7.261e+05	4817.89	-0.07	-420.00	0.0	7.634e+04	3122.15	15.95	-1.543e+04	3886.07	5.518e+05
		5.518e+05	3886.07	-2.91e-04	0.0	60.0	7.634e+04	2702.15	15.95	-1.543e+04	4817.89	7.261e+05
7	66	7.273e+05	2349.97	-0.07	-420.00	0.0	7.603e+04	3103.96	5.03	-1.667e+04	2026.88	5.532e+05
		5.532e+05	2026.88	-2.04e-04	0.0	60.0	7.603e+04	2683.96	5.03	-1.667e+04	2349.97	7.273e+05
7	83	7.261e+05	3852.56	-0.07	-420.00	0.0	7.624e+04	3113.33	12.38	-1.590e+04	3115.89	5.517e+05
		5.517e+05	3115.89	-2.63e-04	0.0	60.0	7.624e+04	2693.33	12.38	-1.590e+04	3852.56	7.261e+05
7	85	7.267e+05	3496.52	-0.07	-420.00	0.0	7.617e+04	3113.29	10.71	-1.606e+04	2853.74	5.525e+05
		5.525e+05	2853.74	-2.49e-04	0.0	60.0	7.617e+04	2693.29	10.71	-1.606e+04	3496.52	7.267e+05
7	86	6.969e+05	3362.88	-0.07	-420.00	0.0	7.305e+04	2994.52	10.26	-1.539e+04	2747.49	5.298e+05
		5.298e+05	2747.49	-2.39e-04	0.0	60.0	7.305e+04	2574.52	10.26	-1.539e+04	3362.88	6.969e+05
7	87	1.989e+06	2335.89	-0.17	-420.00	0.0	1.926e+05	8567.91	35.55	-4.903e+04	202.79	1.488e+06
		1.488e+06	202.79	-5.99e-04	0.0	60.0	1.926e+05	8147.91	35.55	-4.903e+04	2335.89	1.989e+06
7	88	6.919e+05	3340.58	-0.07	-420.00	0.0	7.253e+04	2974.72	10.18	-1.528e+04	2729.78	5.260e+05
		5.260e+05	2729.78	-2.37e-04	0.0	60.0	7.253e+04	2554.72	10.18	-1.528e+04	3340.58	6.919e+05
7	89	1.984e+06	2313.59	-0.17	-420.00	0.0	1.921e+05	8548.12	35.48	-4.892e+04	185.08	1.484e+06

Trave	Cmb	M3 mx/mn	M2 mx/mn	D 2 / D 3	Q 2 / Q 3	Pos.	N	V 2	V 3	T	M 2	M 3
		1.484e+06	185.08	-5.98e-04	0.0	60.0	1.921e+05	8128.12	35.48	-4.892e+04	2313.59	1.984e+06
7	96	7.267e+05	3496.52	-0.07	-420.00	0.0	7.617e+04	3113.29	10.71	-1.606e+04	2853.74	5.525e+05
		5.525e+05	2853.74	-2.49e-04	0.0	60.0	7.617e+04	2693.29	10.71	-1.606e+04	3496.52	7.267e+05
7	97	1.890e+06	2572.24	-0.16	-420.00	0.0	1.838e+05	8129.34	33.48	-4.634e+04	563.51	1.414e+06
		1.414e+06	563.51	-5.74e-04	0.0	60.0	1.838e+05	7709.34	33.48	-4.634e+04	2572.24	1.890e+06
7	98	7.242e+05	3485.38	-0.07	-420.00	0.0	7.591e+04	3103.39	10.67	-1.600e+04	2844.88	5.506e+05
		5.506e+05	2844.88	-2.48e-04	0.0	60.0	7.591e+04	2683.39	10.67	-1.600e+04	3485.38	7.242e+05
7	102	7.267e+05	3496.52	-0.07	-420.00	0.0	7.617e+04	3113.29	10.71	-1.606e+04	2853.74	5.525e+05
		5.525e+05	2853.74	-2.49e-04	0.0	60.0	7.617e+04	2693.29	10.71	-1.606e+04	3496.52	7.267e+05
8	1	9.395e+05	4401.44	-0.06	-546.00	0.0	9.924e+04	2844.66	0.94	-1.449e+04	4345.00	7.852e+05
		7.852e+05	4345.00	-2.21e-04	0.0	60.0	9.924e+04	2298.66	0.94	-1.449e+04	4401.44	9.395e+05
8	2	2.864e+06	3184.47	-0.16	-546.00	0.0	2.879e+05	6277.37	6.33	-3.513e+04	2804.52	2.503e+06
		2.503e+06	2804.52	-5.13e-04	0.0	60.0	2.879e+05	5731.37	6.33	-3.513e+04	3184.47	2.864e+06
8	7	7.041e+05	3304.47	-0.05	-420.00	0.0	7.439e+04	2137.57	0.70	-1.085e+04	3262.60	5.885e+05
		5.885e+05	3262.60	-1.66e-04	0.0	60.0	7.439e+04	1717.57	0.70	-1.085e+04	3304.47	7.041e+05
8	8	2.628e+06	2087.51	-0.15	-420.00	0.0	2.631e+05	5570.28	6.09	-3.150e+04	1722.12	2.307e+06
		2.307e+06	1722.12	-4.58e-04	0.0	60.0	2.631e+05	5150.28	6.09	-3.150e+04	2087.51	2.628e+06
8	21	7.603e+05	1.64	-0.05	-420.00	0.0	7.969e+04	2259.12	-9.84	-1.308e+04	1.64	6.350e+05
		6.350e+05	-535.18	-9.79e-05	0.0	60.0	7.969e+04	1839.12	-9.84	-1.308e+04	-535.18	7.603e+05
8	24	7.570e+05	7620.93	-0.05	-420.00	0.0	8.055e+04	2313.27	11.39	-1.033e+04	6991.40	6.331e+05
		6.331e+05	6991.40	-2.59e-04	0.0	60.0	8.055e+04	1893.27	11.39	-1.033e+04	7620.93	7.570e+05
8	26	7.607e+05	2.99	-0.05	-420.00	0.0	7.965e+04	2266.45	-9.85	-1.308e+04	2.99	6.358e+05
		6.358e+05	-534.21	-9.72e-05	0.0	60.0	7.965e+04	1846.45	-9.85	-1.308e+04	-534.21	7.607e+05
8	27	7.566e+05	7619.96	-0.05	-420.00	0.0	8.060e+04	2305.93	11.39	-1.033e+04	6990.05	6.323e+05
		6.323e+05	6990.05	-2.60e-04	0.0	60.0	8.060e+04	1885.93	11.39	-1.033e+04	7619.96	7.566e+05
8	35	7.566e+05	7285.78	-0.05	-420.00	0.0	8.055e+04	2307.03	13.24	-1.042e+04	6527.41	6.321e+05
		6.321e+05	6527.41	-2.73e-04	0.0	60.0	8.055e+04	1887.03	13.24	-1.042e+04	7285.78	7.566e+05
8	53	7.592e+05	2174.64	-0.05	-420.00	0.0	7.996e+04	2275.99	-3.24	-1.223e+04	2174.64	6.344e+05
		6.344e+05	2000.56	-1.48e-04	0.0	60.0	7.996e+04	1855.99	-3.24	-1.223e+04	2000.56	7.592e+05
8	56	7.580e+05	5085.18	-0.05	-420.00	0.0	8.029e+04	2296.40	4.78	-1.118e+04	4818.40	6.337e+05
		6.337e+05	4818.40	-2.09e-04	0.0	60.0	8.029e+04	1876.40	4.78	-1.118e+04	5085.18	7.580e+05
8	58	7.594e+05	2175.16	-0.05	-420.00	0.0	7.994e+04	2278.80	-3.24	-1.223e+04	2175.16	6.347e+05
		6.347e+05	2000.93	-1.48e-04	0.0	60.0	7.994e+04	1858.80	-3.24	-1.223e+04	2000.93	7.594e+05
8	59	7.578e+05	5084.81	-0.05	-420.00	0.0	8.030e+04	2293.58	4.78	-1.118e+04	4817.88	6.334e+05
		6.334e+05	4817.88	-2.09e-04	0.0	60.0	8.030e+04	1873.58	4.78	-1.118e+04	5084.81	7.578e+05
8	67	7.578e+05	4958.51	-0.05	-420.00	0.0	8.028e+04	2294.00	5.48	-1.121e+04	4643.08	6.333e+05
		6.333e+05	4643.08	-2.14e-04	0.0	60.0	8.028e+04	1874.00	5.48	-1.121e+04	4958.51	7.578e+05
8	85	7.586e+05	3542.87	-0.05	-420.00	0.0	8.012e+04	2286.19	0.77	-1.170e+04	3496.52	6.340e+05
		6.340e+05	3496.52	-1.79e-04	0.0	60.0	8.012e+04	1866.19	0.77	-1.170e+04	3542.87	7.586e+05
8	86	7.275e+05	3406.67	-0.05	-420.00	0.0	7.684e+04	2201.27	0.73	-1.122e+04	3362.87	6.080e+05
		6.080e+05	3362.87	-1.71e-04	0.0	60.0	7.684e+04	1781.27	0.73	-1.122e+04	3406.67	7.275e+05
8	87	2.010e+06	2595.37	-0.11	-420.00	0.0	2.026e+05	4489.74	4.32	-2.498e+04	2335.88	1.753e+06
		1.753e+06	2335.88	-3.66e-04	0.0	60.0	2.026e+05	4069.74	4.32	-2.498e+04	2595.37	2.010e+06
8	88	7.223e+05	3383.94	-0.05	-420.00	0.0	7.630e+04	2187.11	0.72	-1.114e+04	3340.58	6.037e+05
		6.037e+05	3340.58	-1.70e-04	0.0	60.0	7.630e+04	1767.11	0.72	-1.114e+04	3383.94	7.223e+05
8	89	2.005e+06	2572.63	-0.11	-420.00	0.0	2.021e+05	4475.58	4.32	-2.490e+04	2313.59	1.749e+06
		1.749e+06	2313.59	-3.65e-04	0.0	60.0	2.021e+05	4055.58	4.32	-2.490e+04	2572.63	2.005e+06
8	96	7.586e+05	3542.87	-0.05	-420.00	0.0	8.012e+04	2286.19	0.77	-1.170e+04	3496.52	6.340e+05
		6.340e+05	3496.52	-1.79e-04	0.0	60.0	8.012e+04	1866.19	0.77	-1.170e+04	3542.87	7.586e+05
8	97	1.913e+06	2812.69	-0.11	-420.00	0.0	1.933e+05	4345.82	4.01	-2.409e+04	2572.23	1.665e+06
		1.665e+06	2572.23	-3.54e-04	0.0	60.0	1.933e+05	3925.82	4.01	-2.409e+04	2812.69	1.913e+06
8	98	7.560e+05	3531.51	-0.05	-420.00	0.0	7.985e+04	2279.12	0.77	-1.166e+04	3485.37	6.319e+05
		6.319e+05	3485.37	-1.78e-04	0.0	60.0	7.985e+04	1859.12	0.77	-1.166e+04	3531.51	7.560e+05
8	102	7.586e+05	3542.87	-0.05	-420.00	0.0	8.012e+04	2286.19	0.77	-1.170e+04	3496.52	6.340e+05
		6.340e+05	3496.52	-1.79e-04	0.0	60.0	8.012e+04	1866.19	0.77	-1.170e+04	3542.87	7.586e+05
9	1	9.556e+05	4401.43	-0.04	-546.00	0.0	1.025e+05	1817.54	-2.37	-8885.00	4401.43	8.630e+05
		8.630e+05	4259.10	-1.32e-04	0.0	60.0	1.025e+05	1271.54	-2.37	-8885.00	4259.10	9.556e+05
9	2	2.752e+06	3184.46	-0.08	-546.00	0.0	2.929e+05	312.37	-15.14	316.88	3184.46	2.747e+06
		2.747e+06	2275.79	-1.74e-04	0.0	60.0	2.929e+05	-233.63	-15.14	316.88	2275.79	2.749e+06
9	7	7.162e+05	3304.47	-0.03	-420.00	0.0	7.683e+04	1367.71	-1.78	-6659.47	3304.47	6.468e+05
		6.468e+05	3197.48	-9.89e-05	0.0	60.0	7.683e+04	947.71	-1.78	-6659.47	3197.48	7.162e+05
9	8	2.531e+06	2087.50	-0.07	-420.00	0.0	2.672e+05	-137.46	-14.56	2542.41	2087.50	2.531e+06
		2.510e+06	1214.17	-1.41e-04	0.0	60.0	2.672e+05	-557.46	-14.56	2542.41	1214.17	2.510e+06
9	21	7.740e+05	-535.19	-0.03	-420.00	0.0	8.230e+04	1435.61	-8.23	-8115.33	-535.19	6.983e+05
		6.983e+05	-988.12	-6.08e-05	0.0	60.0	8.230e+04	1015.61	-8.23	-8115.33	-988.12	7.740e+05
9	24	7.693e+05	7845.15	-0.03	-420.00	0.0	8.322e+04	1478.27	4.42	-6232.95	7620.92	6.954e+05
		6.954e+05	7620.92	-1.52e-04	0.0	60.0	8.322e+04	1058.27	4.42	-6232.95	7845.15	7.693e+05
9	26	7.741e+05	-534.21	-0.03	-420.00	0.0	8.227e+04	1444.86	-8.24	-8112.64	-534.21	6.990e+05
		6.990e+05	-987.61	-5.99e-05	0.0	60.0	8.227e+04	1024.86	-8.24	-8112.64	-987.61	7.741e+05
9	27	7.692e+05	7844.64	-0.03	-420.00	0.0	8.325e+04	1469.02	4.43	-6235.64	7619.95	6.947e+05
		6.947e+05	7619.95	-1.53e-04	0.0	60.0	8.325e+04	1049.02	4.43	-6235.64	7844.64	7.692e+05
9	35	7.693e+05	7669.83	-0.03	-420.00	0.0	8.321e+04	1469.89	6.73	-6349.67	7285.77	6.945e+05
		6.945e+05	7285.77	-1.70e-04	0.0	60.0	8.321e+04	1049.89	6.73	-6349.67	7669.83	7.693e+05
9	53	7.725e+05	2000.56	-0.03	-420.00	0.0	8.259e+04	1448.88	-4.29	-7532.34	2000.56	6.974e+05
		6.974e+05	1758.27	-8.93e-05	0.0	60.0	8.259e+04	1028.88	-4.29	-7532.34	1758.27	7.725e+05

Trave	Cmb	M3 mx/mn	M2 mx/mn	D 2 / D 3	Q 2 / Q 3	Pos.	N	V 2	V 3	T	M 2	M 3
9	56	7.708e+05	5098.75	-0.03	-420.00	0.0	8.293e+04	1464.99	0.48	-6815.94	5085.18	6.963e+05
		6.963e+05	5085.18	-1.24e-04	0.0	60.0	8.293e+04	1044.99	0.48	-6815.94	5098.75	7.708e+05
9	58	7.726e+05	2000.93	-0.03	-420.00	0.0	8.258e+04	1452.43	-4.30	-7531.31	2000.93	6.976e+05
		6.976e+05	1758.47	-8.90e-05	0.0	60.0	8.258e+04	1032.43	-4.30	-7531.31	1758.47	7.726e+05
9	59	7.707e+05	5098.56	-0.03	-420.00	0.0	8.294e+04	1461.45	0.49	-6816.97	5084.81	6.960e+05
		6.960e+05	5084.81	-1.24e-04	0.0	60.0	8.294e+04	1041.45	0.49	-6816.97	5098.56	7.707e+05
9	67	7.707e+05	5032.48	-0.03	-420.00	0.0	8.293e+04	1461.78	1.36	-6859.66	4958.51	6.959e+05
		6.959e+05	4958.51	-1.30e-04	0.0	60.0	8.293e+04	1041.78	1.36	-6859.66	5032.48	7.707e+05
9	85	7.716e+05	3542.87	-0.03	-420.00	0.0	8.276e+04	1456.94	-1.91	-7174.14	3542.87	6.968e+05
		6.968e+05	3428.51	-1.07e-04	0.0	60.0	8.276e+04	1036.94	-1.91	-7174.14	3428.51	7.716e+05
9	86	7.400e+05	3406.67	-0.03	-420.00	0.0	7.937e+04	1405.95	-1.84	-6879.89	3406.67	6.682e+05
		6.682e+05	3296.53	-1.02e-04	0.0	60.0	7.937e+04	985.95	-1.84	-6879.89	3296.53	7.400e+05
9	87	1.936e+06	2595.36	-0.06	-420.00	0.0	2.063e+05	402.51	-10.35	-745.30	2595.36	1.924e+06
		1.924e+06	1974.33	-1.30e-04	0.0	60.0	2.063e+05	-17.49	-10.35	-745.30	1974.33	1.936e+06
9	88	7.347e+05	3383.94	-0.03	-420.00	0.0	7.881e+04	1397.45	-1.82	-6831.03	3383.94	6.635e+05
		6.635e+05	3274.49	-1.02e-04	0.0	60.0	7.881e+04	977.45	-1.82	-6831.03	3274.49	7.347e+05
9	89	1.930e+06	2572.63	-0.06	-420.00	0.0	2.057e+05	394.01	-10.34	-696.44	2572.63	1.919e+06
		1.919e+06	1952.28	-1.30e-04	0.0	60.0	2.057e+05	-25.99	-10.34	-696.44	1952.28	1.930e+06
9	96	7.716e+05	3542.87	-0.03	-420.00	0.0	8.276e+04	1456.94	-1.91	-7174.14	3542.87	6.968e+05
		6.968e+05	3428.51	-1.07e-04	0.0	60.0	8.276e+04	1036.94	-1.91	-7174.14	3428.51	7.716e+05
9	97	1.848e+06	2812.69	-0.06	-420.00	0.0	1.970e+05	553.84	-9.57	-1653.01	2812.69	1.827e+06
		1.827e+06	2238.53	-1.32e-04	0.0	60.0	1.970e+05	133.84	-9.57	-1653.01	2238.53	1.848e+06
9	98	7.690e+05	3531.50	-0.03	-420.00	0.0	8.248e+04	1452.69	-1.90	-7149.71	3531.50	6.944e+05
		6.944e+05	3417.49	-1.06e-04	0.0	60.0	8.248e+04	1032.69	-1.90	-7149.71	3417.49	7.690e+05
9	102	7.716e+05	3542.87	-0.03	-420.00	0.0	8.276e+04	1456.94	-1.91	-7174.14	3542.87	6.968e+05
		6.968e+05	3428.51	-1.07e-04	0.0	60.0	8.276e+04	1036.94	-1.91	-7174.14	3428.51	7.716e+05
10	1	9.483e+05	4259.09	-0.01	-546.00	0.0	1.041e+05	789.05	-1.24	-3140.95	4259.09	9.173e+05
		9.173e+05	4184.99	-4.34e-05	0.0	60.0	1.041e+05	243.05	-1.24	-3140.95	4184.99	9.483e+05
10	2	2.843e+06	2275.78	-0.01	-546.00	0.0	2.889e+05	-5626.54	-12.34	3.282e+04	2275.78	2.843e+06
		2.489e+06	1535.27	1.29e-04	0.0	60.0	2.889e+05	-6172.54	-12.34	3.282e+04	1535.27	2.489e+06
10	7	7.107e+05	3197.47	-9.90e-03	-420.00	0.0	7.806e+04	596.83	-0.93	-2357.95	3197.47	6.875e+05
		6.875e+05	3141.66	-3.25e-05	0.0	60.0	7.806e+04	176.83	-0.93	-2357.95	3141.66	7.107e+05
10	8	2.613e+06	1214.16	-9.95e-03	-420.00	0.0	2.628e+05	-5818.77	-12.04	3.360e+04	1214.16	2.613e+06
		2.251e+06	491.94	1.40e-04	0.0	60.0	2.628e+05	-6238.77	-12.04	3.360e+04	491.94	2.251e+06
10	24	7.632e+05	7845.14	-0.01	-420.00	0.0	8.455e+04	639.32	-2.74	-2120.35	7845.14	7.387e+05
		7.387e+05	7840.10	-4.40e-05	0.0	60.0	8.455e+04	219.32	-2.74	-2120.35	7840.10	7.632e+05
10	26	7.684e+05	-987.62	-0.01	-420.00	0.0	8.360e+04	624.09	0.75	-2934.66	-987.62	7.428e+05
		7.428e+05	-1101.81	-2.52e-05	0.0	60.0	8.360e+04	204.09	0.75	-2934.66	-1101.81	7.684e+05
10	27	7.630e+05	7844.63	-0.01	-420.00	0.0	8.456e+04	629.07	-2.73	-2123.31	7844.63	7.387e+05
		7.387e+05	7840.10	-4.50e-05	0.0	60.0	8.456e+04	209.07	-2.73	-2123.31	7840.10	7.630e+05
10	30	7.683e+05	-804.30	-0.01	-420.00	0.0	8.361e+04	623.46	-5.07	-2909.31	-804.30	7.434e+05
		7.434e+05	-1102.04	-7.05e-06	0.0	60.0	8.361e+04	203.46	-5.07	-2909.31	-1102.04	7.683e+05
10	36	7.633e+05	7840.33	-0.01	-420.00	0.0	8.454e+04	639.95	3.08	-2145.71	7661.82	7.380e+05
		7.380e+05	7661.82	-6.21e-05	0.0	60.0	8.454e+04	219.95	3.08	-2145.71	7840.33	7.633e+05
10	56	7.648e+05	5098.75	-0.01	-420.00	0.0	8.426e+04	631.42	-1.65	-2373.89	5098.75	7.400e+05
		7.400e+05	5059.88	-3.85e-05	0.0	60.0	8.426e+04	211.42	-1.65	-2373.89	5059.88	7.648e+05
10	58	7.668e+05	1758.46	-0.01	-420.00	0.0	8.390e+04	625.67	-0.33	-2682.95	1758.46	7.415e+05
		7.415e+05	1678.41	-3.13e-05	0.0	60.0	8.390e+04	205.67	-0.33	-2682.95	1678.41	7.668e+05
10	59	7.647e+05	5098.55	-0.01	-420.00	0.0	8.426e+04	627.48	-1.65	-2375.02	5098.55	7.400e+05
		7.400e+05	5059.88	-3.88e-05	0.0	60.0	8.426e+04	207.48	-1.65	-2375.02	5059.88	7.647e+05
10	62	7.667e+05	1827.78	-0.01	-420.00	0.0	8.390e+04	625.44	-2.53	-2674.02	1827.78	7.417e+05
		7.417e+05	1678.32	-2.45e-05	0.0	60.0	8.390e+04	205.44	-2.53	-2674.02	1678.32	7.667e+05
10	68	7.648e+05	5059.97	-0.01	-420.00	0.0	8.425e+04	631.65	0.55	-2382.83	5029.43	7.397e+05
		7.397e+05	5029.43	-4.53e-05	0.0	60.0	8.425e+04	211.65	0.55	-2382.83	5059.97	7.648e+05
10	85	7.657e+05	3428.51	-0.01	-420.00	0.0	8.408e+04	626.58	-0.99	-2528.99	3428.51	7.407e+05
		7.407e+05	3369.15	-3.51e-05	0.0	60.0	8.408e+04	206.58	-0.99	-2528.99	3369.15	7.657e+05
10	86	7.343e+05	3296.53	-0.01	-420.00	0.0	8.064e+04	609.58	-0.96	-2431.16	3296.53	7.103e+05
		7.103e+05	3239.21	-3.36e-05	0.0	60.0	8.064e+04	189.58	-0.96	-2431.16	3239.21	7.343e+05
10	87	1.994e+06	1974.32	-9.58e-03	-420.00	0.0	2.038e+05	-3667.48	-8.36	2.154e+04	1974.32	1.994e+06
		1.761e+06	1472.73	8.15e-05	0.0	60.0	2.038e+05	-4087.48	-8.36	2.154e+04	1472.73	1.761e+06
10	88	7.291e+05	3274.49	-0.01	-420.00	0.0	8.006e+04	606.74	-0.95	-2414.96	3274.49	7.053e+05
		7.053e+05	3217.49	-3.34e-05	0.0	60.0	8.006e+04	186.74	-0.95	-2414.96	3217.49	7.291e+05
10	89	1.989e+06	1952.28	-9.52e-03	-420.00	0.0	2.032e+05	-3670.32	-8.35	2.156e+04	1952.28	1.989e+06
		1.756e+06	1451.01	8.17e-05	0.0	60.0	2.032e+05	-4090.32	-8.35	2.156e+04	1451.01	1.756e+06
10	96	7.657e+05	3428.51	-0.01	-420.00	0.0	8.408e+04	626.58	-0.99	-2528.99	3428.51	7.407e+05
		7.407e+05	3369.15	-3.51e-05	0.0	60.0	8.408e+04	206.58	-0.99	-2528.99	3369.15	7.657e+05
10	97	1.896e+06	2238.52	-9.87e-03	-420.00	0.0	1.949e+05	-3222.78	-7.65	1.905e+04	2238.52	1.896e+06
		1.690e+06	1779.32	6.85e-05	0.0	60.0	1.949e+05	-3642.78	-7.65	1.905e+04	1779.32	1.690e+06
10	98	7.631e+05	3417.49	-0.01	-420.00	0.0	8.379e+04	625.16	-0.99	-2520.89	3417.49	7.382e+05
		7.382e+05	3358.29	-3.50e-05	0.0	60.0	8.379e+04	205.16	-0.99	-2520.89	3358.29	7.631e+05
10	102	7.657e+05	3428.51	-0.01	-420.00	0.0	8.408e+04	626.58	-0.99	-2528.99	3428.51	7.407e+05
		7.407e+05	3369.15	-3.51e-05	0.0	60.0	8.408e+04	206.58	-0.99	-2528.99	3369.15	7.657e+05
11	1	9.482e+05	4258.35	0.01	-546.00	0.0	1.041e+05	-239.79	1.22	2653.54	4184.99	9.482e+05
		9.175e+05	4184.99	4.49e-05	0.0	60.0	1.041e+05	-785.79	1.22	2653.54	4258.35	9.175e+05
11	2	2.718e+06	2409.85	0.07	-546.00	0.0	2.791e+05	-6983.76	14.58	5.905e+04	1535.26	2.718e+06

Trave	Cmb	M3 mx/mn	M2 mx/mn	D 2 / D 3	Q 2 / Q 3	Pos.	N	V 2	V 3	T	M 2	M 3
		2.283e+06	1535.26	3.69e-04	0.0	60.0	2.791e+05	-7529.76	14.58	5.905e+04	2409.85	2.283e+06
11	7	7.107e+05	3196.39	9.87e-03	-420.00	0.0	7.806e+04	-174.32	0.91	1981.52	3141.66	7.107e+05
		6.876e+05	3141.66	3.37e-05	0.0	60.0	7.806e+04	-594.32	0.91	1981.52	3196.39	6.876e+05
11	8	2.481e+06	1347.89	0.06	-420.00	0.0	2.530e+05	-6918.29	14.27	5.838e+04	491.93	2.481e+06
		2.053e+06	491.93	3.58e-04	0.0	60.0	2.530e+05	-7338.29	14.27	5.838e+04	1347.89	2.053e+06
11	27	7.633e+05	7840.27	0.01	-420.00	0.0	8.454e+04	-217.38	-3.08	1773.56	7840.27	7.633e+05
		7.381e+05	7661.95	6.32e-05	0.0	60.0	8.454e+04	-637.38	-3.08	1773.56	7661.95	7.381e+05
11	29	7.684e+05	-978.73	0.01	-420.00	0.0	8.360e+04	-201.60	-0.61	2637.77	-1102.04	7.684e+05
		7.433e+05	-1102.04	2.62e-05	0.0	60.0	8.360e+04	-621.60	-0.61	2637.77	-978.73	7.433e+05
11	31	7.631e+05	7845.42	0.01	-420.00	0.0	8.456e+04	-216.76	2.75	1748.26	7840.16	7.631e+05
		7.388e+05	7840.16	4.51e-05	0.0	60.0	8.456e+04	-636.76	2.75	1748.26	7845.42	7.388e+05
11	33	7.684e+05	-987.29	0.01	-420.00	0.0	8.360e+04	-201.64	-0.75	2562.00	-1101.87	7.684e+05
		7.429e+05	-1101.87	2.62e-05	0.0	60.0	8.360e+04	-621.64	-0.75	2562.00	-987.29	7.429e+05
11	36	7.630e+05	7844.91	0.01	-420.00	0.0	8.457e+04	-206.51	2.74	1751.22	7840.16	7.630e+05
		7.388e+05	7840.16	4.61e-05	0.0	60.0	8.457e+04	-626.51	2.74	1751.22	7844.91	7.388e+05
11	59	7.648e+05	5059.95	0.01	-420.00	0.0	8.426e+04	-209.12	-0.55	2010.53	5059.95	7.648e+05
		7.398e+05	5029.67	4.64e-05	0.0	60.0	8.426e+04	-629.12	-0.55	2010.53	5029.67	7.398e+05
11	61	7.667e+05	1762.04	0.01	-420.00	0.0	8.390e+04	-203.17	0.39	2339.45	1678.32	7.667e+05
		7.418e+05	1678.32	3.24e-05	0.0	60.0	8.390e+04	-623.17	0.39	2339.45	1762.04	7.418e+05
11	63	7.647e+05	5099.04	0.01	-420.00	0.0	8.426e+04	-208.89	1.66	2001.62	5059.91	7.647e+05
		7.400e+05	5059.91	3.95e-05	0.0	60.0	8.426e+04	-628.89	1.66	2001.62	5099.04	7.400e+05
11	65	7.667e+05	1758.78	0.01	-420.00	0.0	8.390e+04	-203.19	0.34	2310.47	1678.39	7.667e+05
		7.416e+05	1678.39	3.24e-05	0.0	60.0	8.390e+04	-623.19	0.34	2310.47	1758.78	7.416e+05
11	68	7.646e+05	5098.85	0.01	-420.00	0.0	8.426e+04	-204.96	1.65	2002.75	5059.91	7.646e+05
		7.400e+05	5059.91	3.99e-05	0.0	60.0	8.426e+04	-624.96	1.65	2002.75	5098.85	7.400e+05
11	85	7.657e+05	3428.81	0.01	-420.00	0.0	8.408e+04	-204.07	0.99	2156.61	3369.15	7.657e+05
		7.408e+05	3369.15	3.62e-05	0.0	60.0	8.408e+04	-624.07	0.99	2156.61	3428.81	7.408e+05
11	86	7.342e+05	3296.08	0.01	-420.00	0.0	8.064e+04	-187.07	0.95	2056.57	3239.21	7.342e+05
		7.104e+05	3239.21	3.47e-05	0.0	60.0	8.064e+04	-607.07	0.95	2056.57	3296.08	7.104e+05
11	87	1.914e+06	2063.74	0.05	-420.00	0.0	1.973e+05	-4683.05	9.85	3.966e+04	1472.73	1.914e+06
		1.621e+06	1472.73	2.51e-04	0.0	60.0	1.973e+05	-5103.05	9.85	3.966e+04	2063.74	1.621e+06
11	88	7.290e+05	3273.86	0.01	-420.00	0.0	8.007e+04	-184.23	0.94	2039.88	3217.49	7.290e+05
		7.053e+05	3217.49	3.45e-05	0.0	60.0	8.007e+04	-604.23	0.94	2039.88	3273.86	7.053e+05
11	89	1.909e+06	2041.53	0.05	-420.00	0.0	1.967e+05	-4680.22	9.84	3.964e+04	1451.00	1.909e+06
		1.616e+06	1451.00	2.51e-04	0.0	60.0	1.967e+05	-5100.22	9.84	3.964e+04	2041.53	1.616e+06
11	96	7.657e+05	3428.81	0.01	-420.00	0.0	8.408e+04	-204.07	0.99	2156.61	3369.15	7.657e+05
		7.408e+05	3369.15	3.62e-05	0.0	60.0	8.408e+04	-624.07	0.99	2156.61	3428.81	7.408e+05
11	97	1.828e+06	2319.71	0.04	-420.00	0.0	1.890e+05	-4250.46	9.01	3.600e+04	1779.31	1.828e+06
		1.560e+06	1779.31	2.31e-04	0.0	60.0	1.890e+05	-4670.46	9.01	3.600e+04	2319.71	1.560e+06
11	98	7.630e+05	3417.71	0.01	-420.00	0.0	8.379e+04	-202.66	0.99	2148.26	3358.29	7.630e+05
		7.383e+05	3358.29	3.60e-05	0.0	60.0	8.379e+04	-622.66	0.99	2148.26	3417.71	7.383e+05
11	102	7.657e+05	3428.81	0.01	-420.00	0.0	8.408e+04	-204.07	0.99	2156.61	3369.15	7.657e+05
		7.408e+05	3369.15	3.62e-05	0.0	60.0	8.408e+04	-624.07	0.99	2156.61	3428.81	7.408e+05
12	2	2.576e+06	4841.44	0.13	-546.00	0.0	2.666e+05	-8350.75	40.53	7.963e+04	2409.85	2.576e+06
		2.058e+06	2409.85	5.68e-04	0.0	60.0	2.666e+05	-8896.75	40.53	7.963e+04	4841.44	2.058e+06
12	7	7.162e+05	3302.22	0.03	-420.00	0.0	7.684e+04	-945.04	1.76	6282.31	3196.39	7.162e+05
		6.469e+05	3196.39	1.00e-04	0.0	60.0	7.684e+04	-1365.04	1.76	6282.31	3302.22	6.469e+05
12	8	2.336e+06	3743.82	0.12	-420.00	0.0	2.409e+05	-8027.72	39.93	7.752e+04	1347.88	2.336e+06
		1.842e+06	1347.88	5.35e-04	0.0	60.0	2.409e+05	-8447.72	39.93	7.752e+04	3743.82	1.842e+06
12	28	7.692e+05	7670.00	0.03	-420.00	0.0	8.322e+04	-1047.21	-6.73	5976.04	7670.00	7.692e+05
		6.946e+05	7286.19	1.71e-04	0.0	60.0	8.322e+04	-1467.21	-6.73	5976.04	7286.19	6.946e+05
12	30	7.740e+05	-534.63	0.03	-420.00	0.0	8.231e+04	-1013.01	8.24	7741.14	-987.80	7.740e+05
		6.984e+05	-987.80	6.19e-05	0.0	60.0	8.231e+04	-1433.01	8.24	7741.14	-534.63	6.984e+05
12	31	7.693e+05	7845.42	0.03	-420.00	0.0	8.323e+04	-1055.56	-4.42	5860.05	7845.42	7.693e+05
		6.955e+05	7621.41	1.53e-04	0.0	60.0	8.323e+04	-1475.56	-4.42	5860.05	7621.41	6.955e+05
12	33	7.741e+05	-533.66	0.03	-420.00	0.0	8.228e+04	-1022.26	8.24	7738.45	-987.29	7.741e+05
		6.991e+05	-987.29	6.10e-05	0.0	60.0	8.228e+04	-1442.26	8.24	7738.45	-533.66	6.991e+05
12	36	7.691e+05	7844.91	0.03	-420.00	0.0	8.325e+04	-1046.32	-4.42	5862.75	7844.91	7.691e+05
		6.948e+05	7620.44	1.54e-04	0.0	60.0	8.325e+04	-1466.32	-4.42	5862.75	7620.44	6.948e+05
12	60	7.707e+05	5032.73	0.03	-420.00	0.0	8.294e+04	-1039.11	-1.35	6486.09	5032.73	7.707e+05
		6.961e+05	4958.99	1.32e-04	0.0	60.0	8.294e+04	-1459.11	-1.35	6486.09	4958.99	6.961e+05
12	62	7.725e+05	2001.09	0.03	-420.00	0.0	8.259e+04	-1026.25	4.30	7158.55	1758.58	7.725e+05
		6.975e+05	1758.58	9.04e-05	0.0	60.0	8.259e+04	-1446.25	4.30	7158.55	2001.09	6.975e+05
12	63	7.707e+05	5099.04	0.03	-420.00	0.0	8.294e+04	-1042.32	-0.48	6442.64	5099.04	7.707e+05
		6.964e+05	5085.69	1.25e-04	0.0	60.0	8.294e+04	-1462.32	-0.48	6442.64	5085.69	6.964e+05
12	65	7.726e+05	2001.46	0.03	-420.00	0.0	8.258e+04	-1029.80	4.30	7157.52	1758.78	7.726e+05
		6.978e+05	1758.78	9.00e-05	0.0	60.0	8.258e+04	-1449.80	4.30	7157.52	2001.46	6.978e+05
12	68	7.707e+05	5098.85	0.03	-420.00	0.0	8.295e+04	-1038.78	-0.48	6443.67	5098.85	7.707e+05
		6.962e+05	5085.32	1.25e-04	0.0	60.0	8.295e+04	-1458.78	-0.48	6443.67	5085.32	6.962e+05
12	85	7.716e+05	3543.39	0.03	-420.00	0.0	8.277e+04	-1034.29	1.91	6800.60	3428.81	7.716e+05
		6.970e+05	3428.81	1.08e-04	0.0	60.0	8.277e+04	-1454.29	1.91	6800.60	3543.39	6.970e+05
12	87	1.820e+06	3700.08	0.09	-420.00	0.0	1.888e+05	-5705.07	27.27	5.400e+04	2063.74	1.820e+06
		1.465e+06	2063.74	3.93e-04	0.0	60.0	1.888e+05	-6125.07	27.27	5.400e+04	3700.08	1.465e+06
12	88	7.347e+05	3382.61	0.03	-420.00	0.0	7.882e+04	-974.79	1.81	6455.07	3273.87	7.347e+05
		6.636e+05	3273.87	1.03e-04	0.0	60.0	7.882e+04	-1394.79	1.81	6455.07	3382.61	6.636e+05

Trave	Cmb	M3 mx/mn	M2 mx/mn	D 2 / D 3	Q 2 / Q 3	Pos.	N	V 2	V 3	T	M 2	M 3
12	89	1.815e+06	3677.01	0.09	-420.00	0.0	1.882e+05	-5696.57	27.26	5.395e+04	2041.53	1.815e+06
		1.460e+06	2041.53	3.92e-04	0.0	60.0	1.882e+05	-6116.57	27.26	5.395e+04	3677.01	1.460e+06
12	97	1.744e+06	3808.35	0.09	-420.00	0.0	1.812e+05	-5283.89	24.81	4.954e+04	2319.71	1.744e+06
		1.414e+06	2319.71	3.68e-04	0.0	60.0	1.812e+05	-5703.89	24.81	4.954e+04	3808.35	1.414e+06
12	98	7.690e+05	3531.86	0.03	-420.00	0.0	8.249e+04	-1030.04	1.90	6775.95	3417.71	7.690e+05
		6.946e+05	3417.71	1.07e-04	0.0	60.0	8.249e+04	-1450.04	1.90	6775.95	3531.86	6.946e+05
12	102	7.716e+05	3543.39	0.03	-420.00	0.0	8.277e+04	-1034.29	1.91	6800.60	3428.81	7.716e+05
		6.970e+05	3428.81	1.08e-04	0.0	60.0	8.277e+04	-1454.29	1.91	6800.60	3543.39	6.970e+05
13	2	2.406e+06	6672.47	0.20	-546.00	0.0	2.518e+05	-9788.60	30.52	9.540e+04	4841.43	2.406e+06
		1.802e+06	4841.43	7.50e-04	0.0	60.0	2.518e+05	-1.033e+04	30.52	9.540e+04	6672.47	1.802e+06
13	7	7.041e+05	3302.22	0.05	-420.00	0.0	7.440e+04	-1714.59	-0.73	1.047e+04	3302.22	7.041e+05
		5.887e+05	3258.65	1.67e-04	0.0	60.0	7.440e+04	-2134.59	-0.73	1.047e+04	3258.65	5.887e+05
13	28	7.566e+05	7286.19	0.05	-420.00	0.0	8.056e+04	-1884.09	-13.25	1.005e+04	7286.19	7.566e+05
		6.323e+05	6527.72	2.74e-04	0.0	60.0	8.056e+04	-2304.09	-13.25	1.005e+04	6527.72	6.323e+05
13	30	7.603e+05	1.69	0.05	-420.00	0.0	7.971e+04	-1836.15	9.83	1.271e+04	-534.63	7.603e+05
		6.352e+05	-534.63	9.89e-05	0.0	60.0	7.971e+04	-2256.15	9.83	1.271e+04	1.69	6.352e+05
13	31	7.570e+05	7621.42	0.05	-420.00	0.0	8.057e+04	-1890.30	-11.39	9950.20	7621.42	7.570e+05
		6.333e+05	6991.66	2.60e-04	0.0	60.0	8.057e+04	-2310.30	-11.39	9950.20	6991.66	6.333e+05
13	33	7.607e+05	3.04	0.05	-420.00	0.0	7.966e+04	-1843.49	9.84	1.270e+04	-533.66	7.607e+05
		6.360e+05	-533.66	9.82e-05	0.0	60.0	7.966e+04	-2263.49	9.84	1.270e+04	3.04	6.360e+05
13	36	7.566e+05	7620.45	0.05	-420.00	0.0	8.061e+04	-1882.96	-11.39	9952.39	7620.45	7.566e+05
		6.325e+05	6990.31	2.61e-04	0.0	60.0	8.061e+04	-2302.96	-11.39	9952.39	6990.31	6.325e+05
13	60	7.579e+05	4959.00	0.05	-420.00	0.0	8.030e+04	-1871.04	-5.49	1.084e+04	4959.00	7.579e+05
		6.335e+05	4643.29	2.15e-04	0.0	60.0	8.030e+04	-2291.04	-5.49	1.084e+04	4643.29	6.335e+05
13	62	7.592e+05	2174.76	0.05	-420.00	0.0	7.997e+04	-1853.02	3.23	1.185e+04	2001.09	7.592e+05
		6.346e+05	2001.09	1.49e-04	0.0	60.0	7.997e+04	-2273.02	3.23	1.185e+04	2174.76	6.346e+05
13	63	7.580e+05	5085.69	0.05	-420.00	0.0	8.030e+04	-1873.43	-4.79	1.080e+04	5085.69	7.580e+05
		6.339e+05	4818.59	2.10e-04	0.0	60.0	8.030e+04	-2293.43	-4.79	1.080e+04	4818.59	6.339e+05
13	65	7.594e+05	2175.28	0.05	-420.00	0.0	7.996e+04	-1855.83	3.23	1.185e+04	2001.47	7.594e+05
		6.349e+05	2001.47	1.49e-04	0.0	60.0	7.996e+04	-2275.83	3.23	1.185e+04	2175.28	6.349e+05
13	68	7.578e+05	5085.32	0.05	-420.00	0.0	8.032e+04	-1870.62	-4.79	1.080e+04	5085.32	7.578e+05
		6.336e+05	4818.08	2.10e-04	0.0	60.0	8.032e+04	-2290.62	-4.79	1.080e+04	4818.08	6.336e+05
13	85	7.586e+05	3543.39	0.05	-420.00	0.0	8.014e+04	-1863.22	-0.78	1.133e+04	3543.39	7.586e+05
		6.342e+05	3496.68	1.80e-04	0.0	60.0	8.014e+04	-2283.22	-0.78	1.133e+04	3496.68	6.342e+05
13	87	1.705e+06	4914.53	0.14	-420.00	0.0	1.785e+05	-6774.16	20.24	6.511e+04	3700.08	1.705e+06
		1.286e+06	3700.08	5.24e-04	0.0	60.0	1.785e+05	-7194.16	20.24	6.511e+04	4914.53	1.286e+06
13	88	7.223e+05	3382.61	0.05	-420.00	0.0	7.631e+04	-1764.13	-0.74	1.076e+04	3382.61	7.223e+05
		6.038e+05	3337.99	1.71e-04	0.0	60.0	7.631e+04	-2184.13	-0.74	1.076e+04	3337.99	6.038e+05
13	97	1.638e+06	4895.05	0.13	-420.00	0.0	1.717e+05	-6359.51	18.11	6.017e+04	3808.35	1.638e+06
		1.244e+06	3808.35	4.96e-04	0.0	60.0	1.717e+05	-6779.51	18.11	6.017e+04	4895.05	1.244e+06
13	98	7.560e+05	3531.86	0.05	-420.00	0.0	7.986e+04	-1856.15	-0.78	1.129e+04	3531.86	7.560e+05
		6.321e+05	3485.28	1.79e-04	0.0	60.0	7.986e+04	-2276.15	-0.78	1.129e+04	3485.28	6.321e+05
13	102	7.586e+05	3543.39	0.05	-420.00	0.0	8.014e+04	-1863.22	-0.78	1.133e+04	3543.39	7.586e+05
		6.342e+05	3496.68	1.80e-04	0.0	60.0	8.014e+04	-2283.22	-0.78	1.133e+04	3496.68	6.342e+05
14	2	2.204e+06	6672.46	0.25	-546.00	0.0	2.347e+05	-1.128e+04	-13.75	1.071e+05	6672.46	2.204e+06
		1.510e+06	5847.67	9.16e-04	0.0	60.0	2.347e+05	-1.183e+04	-13.75	1.071e+05	5847.67	1.510e+06
14	7	6.745e+05	3258.65	0.07	-420.00	0.0	7.073e+04	-2481.92	-9.98	1.451e+04	3258.65	6.745e+05
		5.130e+05	2660.05	2.32e-04	0.0	60.0	7.073e+04	-2901.92	-9.98	1.451e+04	2660.05	5.130e+05
14	25	7.282e+05	665.38	0.07	-420.00	0.0	7.581e+04	-2664.90	4.29	1.726e+04	465.63	7.282e+05
		5.546e+05	465.63	1.30e-04	0.0	60.0	7.581e+04	-3084.90	4.29	1.726e+04	665.38	5.546e+05
14	30	7.276e+05	120.20	0.07	-420.00	0.0	7.580e+04	-2661.42	3.09	1.733e+04	1.69	7.276e+05
		5.536e+05	1.69	1.39e-04	0.0	60.0	7.580e+04	-3081.42	3.09	1.733e+04	120.20	5.536e+05
14	31	7.259e+05	6991.67	0.07	-420.00	0.0	7.658e+04	-2718.16	-24.60	1.403e+04	6991.67	7.259e+05
		5.519e+05	5582.21	3.62e-04	0.0	60.0	7.658e+04	-3138.16	-24.60	1.403e+04	5582.21	5.519e+05
14	33	7.282e+05	121.80	0.07	-420.00	0.0	7.575e+04	-2666.13	3.09	1.733e+04	3.04	7.282e+05
		5.545e+05	3.04	1.38e-04	0.0	60.0	7.575e+04	-3086.13	3.09	1.733e+04	121.80	5.545e+05
14	36	7.253e+05	6990.32	0.07	-420.00	0.0	7.663e+04	-2713.44	-24.61	1.404e+04	6990.32	7.253e+05
		5.510e+05	5580.61	3.62e-04	0.0	60.0	7.663e+04	-3133.44	-24.61	1.404e+04	5580.61	5.510e+05
14	48	7.253e+05	4437.67	0.07	-420.00	0.0	7.638e+04	-2690.08	-15.18	1.527e+04	4437.67	7.253e+05
		5.508e+05	3543.91	2.87e-04	0.0	60.0	7.638e+04	-3110.08	-15.18	1.527e+04	3543.91	5.508e+05
14	57	7.273e+05	2350.07	0.07	-420.00	0.0	7.605e+04	-2680.45	-5.07	1.629e+04	2350.07	7.273e+05
		5.534e+05	2024.12	2.05e-04	0.0	60.0	7.605e+04	-3100.45	-5.07	1.629e+04	2024.12	5.534e+05
14	62	7.270e+05	2174.76	0.07	-420.00	0.0	7.604e+04	-2679.11	-5.53	1.631e+04	2174.76	7.270e+05
		5.531e+05	1818.18	2.08e-04	0.0	60.0	7.604e+04	-3099.11	-5.53	1.631e+04	1818.18	5.531e+05
14	63	7.264e+05	4818.60	0.07	-420.00	0.0	7.634e+04	-2700.47	-15.99	1.505e+04	4818.60	7.264e+05
		5.524e+05	3884.22	2.92e-04	0.0	60.0	7.634e+04	-3120.47	-15.99	1.505e+04	3884.22	5.524e+05
14	65	7.273e+05	2175.28	0.07	-420.00	0.0	7.602e+04	-2680.91	-5.53	1.631e+04	2175.28	7.273e+05
		5.534e+05	1818.80	2.08e-04	0.0	60.0	7.602e+04	-3100.91	-5.53	1.631e+04	1818.80	5.534e+05
14	68	7.262e+05	4818.08	0.07	-420.00	0.0	7.636e+04	-2698.66	-15.99	1.505e+04	4818.08	7.262e+05
		5.521e+05	3883.61	2.92e-04	0.0	60.0	7.636e+04	-3118.66	-15.99	1.505e+04	3883.61	5.521e+05
14	80	7.262e+05	3852.73	0.07	-420.00	0.0	7.626e+04	-2689.84	-12.43	1.552e+04	3852.73	7.262e+05
		5.520e+05	3113.41	2.64e-04	0.0	60.0	7.626e+04	-3109.84	-12.43	1.552e+04	3113.41	5.520e+05
14	85	7.267e+05	3496.68	0.07	-420.00	0.0	7.619e+04	-2689.79	-10.76	1.568e+04	3496.68	7.267e+05
		5.527e+05	2851.20	2.50e-04	0.0	60.0	7.619e+04	-3109.79	-10.76	1.568e+04	2851.20	5.527e+05
14	87	1.566e+06	4914.53	0.18	-420.00	0.0	1.666e+05	-7881.72	-10.60	7.350e+04	4914.53	1.566e+06

Trave	Cmb	M3 mx/mn	M2 mx/mn	D 2 / D 3	Q 2 / Q 3	Pos.	N	V 2	V 3	T	M 2	M 3
		1.080e+06	4278.61	6.44e-04	0.0	60.0	1.666e+05	-8301.72	-10.60	7.350e+04	4278.61	1.080e+06
14	88	6.919e+05	3338.00	0.07	-420.00	0.0	7.255e+04	-2551.21	-10.24	1.490e+04	3338.00	6.919e+05
		5.263e+05	2723.77	2.38e-04	0.0	60.0	7.255e+04	-2971.21	-10.24	1.490e+04	2723.77	5.263e+05
14	97	1.509e+06	4895.05	0.17	-420.00	0.0	1.604e+05	-7469.43	-11.02	6.832e+04	4895.05	1.509e+06
		1.048e+06	4234.05	6.14e-04	0.0	60.0	1.604e+05	-7889.43	-11.02	6.832e+04	4234.05	1.048e+06
14	98	7.242e+05	3485.28	0.07	-420.00	0.0	7.593e+04	-2679.89	-10.72	1.563e+04	3485.28	7.242e+05
		5.508e+05	2842.03	2.49e-04	0.0	60.0	7.593e+04	-3099.89	-10.72	1.563e+04	2842.03	5.508e+05
14	102	7.267e+05	3496.68	0.07	-420.00	0.0	7.619e+04	-2689.79	-10.76	1.568e+04	3496.68	7.267e+05
		5.527e+05	2851.20	2.50e-04	0.0	60.0	7.619e+04	-3109.79	-10.76	1.568e+04	2851.20	5.527e+05
15	2	1.967e+06	5847.67	0.30	-546.00	0.0	2.152e+05	-1.281e+04	-102.16	1.158e+05	5847.67	1.967e+06
		1.182e+06	-282.04	1.05e-03	0.0	60.0	2.152e+05	-1.336e+04	-102.16	1.158e+05	-282.04	1.182e+06
15	7	6.274e+05	2660.05	0.08	-420.00	0.0	6.585e+04	-3245.78	-30.97	1.833e+04	2660.05	6.274e+05
		4.201e+05	801.62	2.92e-04	0.0	60.0	6.585e+04	-3665.78	-30.97	1.833e+04	801.62	4.201e+05
15	8	1.758e+06	4964.79	0.27	-420.00	0.0	1.932e+05	-1.172e+04	-91.79	1.096e+05	4964.79	1.758e+06
		1.042e+06	-542.79	9.55e-04	0.0	60.0	1.932e+05	-1.214e+04	-91.79	1.096e+05	-542.79	1.042e+06
15	19	6.274e+05	2661.03	0.08	-420.00	0.0	6.585e+04	-3245.80	-30.97	1.833e+04	2661.03	6.274e+05
		4.201e+05	802.59	2.92e-04	0.0	60.0	6.585e+04	-3665.80	-30.97	1.833e+04	802.59	4.201e+05
15	30	6.769e+05	120.20	0.09	-420.00	0.0	7.060e+04	-3486.27	-17.60	2.157e+04	120.20	6.769e+05
		4.538e+05	-1022.72	1.77e-04	0.0	60.0	7.060e+04	-3906.27	-17.60	2.157e+04	-1022.72	4.538e+05
15	31	6.751e+05	5582.22	0.09	-420.00	0.0	7.126e+04	-3538.97	-49.21	1.808e+04	5582.22	6.751e+05
		4.515e+05	2716.52	4.51e-04	0.0	60.0	7.126e+04	-3958.97	-49.21	1.808e+04	2716.52	4.515e+05
15	33	6.777e+05	121.80	0.09	-420.00	0.0	7.054e+04	-3487.90	-17.58	2.157e+04	121.80	6.777e+05
		4.547e+05	-1021.01	1.77e-04	0.0	60.0	7.054e+04	-3907.90	-17.58	2.157e+04	-1021.01	4.547e+05
15	36	6.743e+05	5580.62	0.09	-420.00	0.0	7.132e+04	-3537.34	-49.23	1.808e+04	5580.62	6.743e+05
		4.506e+05	2714.81	4.51e-04	0.0	60.0	7.132e+04	-3957.34	-49.23	1.808e+04	2714.81	4.506e+05
15	49	6.778e+05	1995.43	0.09	-420.00	0.0	7.072e+04	-3507.69	-28.63	2.032e+04	1995.43	6.778e+05
		4.547e+05	248.17	2.73e-04	0.0	60.0	7.072e+04	-3927.69	-28.63	2.032e+04	248.17	4.547e+05
15	62	6.763e+05	1818.19	0.09	-420.00	0.0	7.080e+04	-3502.70	-27.43	2.049e+04	1818.19	6.763e+05
		4.531e+05	139.80	2.62e-04	0.0	60.0	7.080e+04	-3922.70	-27.43	2.049e+04	139.80	4.531e+05
15	63	6.757e+05	3884.23	0.09	-420.00	0.0	7.105e+04	-3522.54	-39.38	1.915e+04	3884.23	6.757e+05
		4.522e+05	1554.00	3.66e-04	0.0	60.0	7.105e+04	-3942.54	-39.38	1.915e+04	1554.00	4.522e+05
15	65	6.766e+05	1818.80	0.09	-420.00	0.0	7.078e+04	-3503.32	-27.42	2.049e+04	1818.80	6.766e+05
		4.534e+05	140.45	2.62e-04	0.0	60.0	7.078e+04	-3923.32	-27.42	2.049e+04	140.45	4.534e+05
15	68	6.754e+05	3883.62	0.09	-420.00	0.0	7.108e+04	-3521.92	-39.39	1.915e+04	3883.62	6.754e+05
		4.519e+05	1553.35	3.66e-04	0.0	60.0	7.108e+04	-3941.92	-39.39	1.915e+04	1553.35	4.519e+05
15	81	6.767e+05	2527.40	0.09	-420.00	0.0	7.085e+04	-3510.78	-31.60	2.001e+04	2527.40	6.767e+05
		4.534e+05	620.34	2.98e-04	0.0	60.0	7.085e+04	-3930.78	-31.60	2.001e+04	620.34	4.534e+05
15	85	6.760e+05	2851.21	0.09	-420.00	0.0	7.093e+04	-3512.62	-33.41	1.982e+04	2851.21	6.760e+05
		4.526e+05	846.90	3.14e-04	0.0	60.0	7.093e+04	-3932.62	-33.41	1.982e+04	846.90	4.526e+05
15	87	1.402e+06	4278.61	0.21	-420.00	0.0	1.529e+05	-9011.48	-72.56	7.981e+04	4278.61	1.402e+06
		8.485e+05	-75.11	7.44e-04	0.0	60.0	1.529e+05	-9431.48	-72.56	7.981e+04	-75.11	8.485e+05
15	88	6.436e+05	2723.77	0.08	-420.00	0.0	6.754e+04	-3334.73	-31.78	1.883e+04	2723.77	6.436e+05
		4.309e+05	816.71	2.99e-04	0.0	60.0	6.754e+04	-3754.73	-31.78	1.883e+04	816.71	4.309e+05
15	89	1.397e+06	4260.26	0.21	-420.00	0.0	1.524e+05	-8986.06	-72.33	7.967e+04	4260.26	1.397e+06
		8.454e+05	-79.56	7.41e-04	0.0	60.0	1.524e+05	-9406.06	-72.33	7.967e+04	-79.56	8.454e+05
15	94	6.436e+05	2724.43	0.08	-420.00	0.0	6.754e+04	-3334.74	-31.78	1.883e+04	2724.43	6.436e+05
		4.309e+05	817.36	2.99e-04	0.0	60.0	6.754e+04	-3754.74	-31.78	1.883e+04	817.36	4.309e+05
15	97	1.354e+06	4234.05	0.20	-420.00	0.0	1.473e+05	-8598.82	-69.90	7.458e+04	4234.05	1.354e+06
		8.257e+05	40.26	7.12e-04	0.0	60.0	1.473e+05	-9018.82	-69.90	7.458e+04	40.26	8.257e+05
15	98	6.737e+05	2842.04	0.09	-420.00	0.0	7.069e+04	-3499.91	-33.29	1.975e+04	2842.04	6.737e+05
		4.511e+05	844.67	3.13e-04	0.0	60.0	7.069e+04	-3919.91	-33.29	1.975e+04	844.67	4.511e+05
15	101	6.737e+05	2842.36	0.09	-420.00	0.0	7.069e+04	-3499.92	-33.29	1.975e+04	2842.36	6.737e+05
		4.511e+05	845.00	3.13e-04	0.0	60.0	7.069e+04	-3919.92	-33.29	1.975e+04	845.00	4.511e+05
15	102	6.760e+05	2851.21	0.09	-420.00	0.0	7.093e+04	-3512.62	-33.41	1.982e+04	2851.21	6.760e+05
		4.526e+05	846.90	3.14e-04	0.0	60.0	7.093e+04	-3932.62	-33.41	1.982e+04	846.90	4.526e+05
16	1	7.510e+05	1062.37	0.13	-546.00	0.0	7.973e+04	-5350.50	-93.34	2.926e+04	1062.37	7.510e+05
		4.135e+05	-4537.76	4.45e-04	0.0	60.0	7.973e+04	-5896.50	-93.34	2.926e+04	-4537.76	4.135e+05
16	2	1.696e+06	-282.04	0.34	-546.00	0.0	1.932e+05	-1.436e+04	-254.34	1.221e+05	-282.04	1.696e+06
		8.181e+05	-1.554e+04	1.12e-03	0.0	60.0	1.932e+05	-1.490e+04	-254.34	1.221e+05	-1.554e+04	8.181e+05
16	19	5.628e+05	802.59	0.10	-420.00	0.0	5.976e+04	-4004.91	-69.93	2.190e+04	802.59	5.628e+05
		3.099e+05	-3393.14	3.33e-04	0.0	60.0	5.976e+04	-4424.91	-69.93	2.190e+04	-3393.14	3.099e+05
16	30	6.036e+05	-1022.71	0.10	-420.00	0.0	6.411e+04	-4303.48	-59.17	2.541e+04	-1022.71	6.036e+05
		3.354e+05	-4722.82	2.04e-04	0.0	60.0	6.411e+04	-4723.48	-59.17	2.541e+04	-4722.82	3.354e+05
16	31	6.091e+05	2716.53	0.10	-420.00	0.0	6.463e+04	-4357.24	-91.66	2.195e+04	2716.53	6.091e+05
		3.325e+05	-2633.34	5.14e-04	0.0	60.0	6.463e+04	-4777.24	-91.66	2.195e+04	-2633.34	3.325e+05
16	33	6.046e+05	-1021.01	0.10	-420.00	0.0	6.405e+04	-4305.10	-59.14	2.541e+04	-1021.01	6.046e+05
		3.363e+05	-4721.18	2.04e-04	0.0	60.0	6.405e+04	-4725.10	-59.14	2.541e+04	-4721.18	3.363e+05
16	35	6.091e+05	2689.53	0.10	-420.00	0.0	6.463e+04	-4357.24	-91.66	2.195e+04	2689.53	6.091e+05
		3.325e+05	-2658.47	5.14e-04	0.0	60.0	6.463e+04	-4777.24	-91.66	2.195e+04	-2658.47	3.325e+05
16	36	6.082e+05	2714.82	0.10	-420.00	0.0	6.469e+04	-4355.62	-91.70	2.195e+04	2714.82	6.082e+05
		3.317e+05	-2634.98	5.14e-04	0.0	60.0	6.469e+04	-4775.62	-91.70	2.195e+04	-2634.98	3.317e+05
16	62	6.053e+05	139.80	0.10	-420.00	0.0	6.427e+04	-4320.21	-69.27	2.435e+04	139.80	6.053e+05
		3.345e+05	-4072.75	3.00e-04	0.0	60.0	6.427e+04	-4740.21	-69.27	2.435e+04	-4072.75	3.345e+05
16	63	6.074e+05	1554.01	0.10	-420.00	0.0	6.447e+04	-4340.51	-81.56	2.301e+04	1554.01	6.074e+05
		3.334e+05	-3283.41	4.18e-04	0.0	60.0	6.447e+04	-4760.51	-81.56	2.301e+04	-3283.41	3.334e+05

Trave	Cmb	M3 mx/mn	M2 mx/mn	D 2 / D 3	Q 2 / Q 3	Pos.	N	V 2	V 3	T	M 2	M 3
16	65	6.057e+05	140.45	0.10	-420.00	0.0	6.425e+04	-4320.83	-69.26	2.435e+04	140.45	6.057e+05
		3.348e+05	-4072.12	3.00e-04	0.0	60.0	6.425e+04	-4740.83	-69.26	2.435e+04	-4072.12	3.348e+05
16	67	6.074e+05	1543.72	0.10	-420.00	0.0	6.447e+04	-4340.51	-81.56	2.301e+04	1543.72	6.074e+05
		3.334e+05	-3292.99	4.18e-04	0.0	60.0	6.447e+04	-4760.51	-81.56	2.301e+04	-3292.99	3.334e+05
16	68	6.071e+05	1553.36	0.10	-420.00	0.0	6.449e+04	-4339.89	-81.57	2.301e+04	1553.36	6.071e+05
		3.331e+05	-3284.04	4.18e-04	0.0	60.0	6.449e+04	-4759.89	-81.57	2.301e+04	-3284.04	3.331e+05
16	85	6.064e+05	846.91	0.10	-420.00	0.0	6.437e+04	-4330.36	-75.42	2.368e+04	846.91	6.064e+05
		3.340e+05	-3678.08	3.59e-04	0.0	60.0	6.437e+04	-4750.36	-75.42	2.368e+04	-3678.08	3.340e+05
16	86	5.815e+05	821.17	0.10	-420.00	0.0	6.174e+04	-4144.38	-72.28	2.266e+04	821.17	5.815e+05
		3.202e+05	-3515.58	3.44e-04	0.0	60.0	6.174e+04	-4564.38	-72.28	2.266e+04	-3515.58	3.202e+05
16	87	1.211e+06	-75.11	0.24	-420.00	0.0	1.374e+05	-1.015e+04	-179.61	8.459e+04	-75.11	1.211e+06
		5.899e+05	-1.085e+04	7.94e-04	0.0	60.0	1.374e+05	-1.057e+04	-179.61	8.459e+04	-1.085e+04	5.899e+05
16	94	5.773e+05	817.36	0.10	-420.00	0.0	6.130e+04	-4113.39	-71.76	2.249e+04	817.36	5.773e+05
		3.179e+05	-3488.12	3.42e-04	0.0	60.0	6.130e+04	-4533.39	-71.76	2.249e+04	-3488.12	3.179e+05
16	96	6.064e+05	846.91	0.10	-420.00	0.0	6.437e+04	-4330.36	-75.42	2.368e+04	846.91	6.064e+05
		3.340e+05	-3678.08	3.59e-04	0.0	60.0	6.437e+04	-4750.36	-75.42	2.368e+04	-3678.08	3.340e+05
16	97	1.173e+06	40.26	0.23	-420.00	0.0	1.325e+05	-9734.94	-172.02	7.941e+04	40.26	1.173e+06
		5.767e+05	-1.028e+04	7.64e-04	0.0	60.0	1.325e+05	-1.015e+04	-172.02	7.941e+04	-1.028e+04	5.767e+05
16	101	6.043e+05	845.00	0.10	-420.00	0.0	6.415e+04	-4314.87	-75.16	2.359e+04	845.00	6.043e+05
		3.328e+05	-3664.35	3.58e-04	0.0	60.0	6.415e+04	-4734.87	-75.16	2.359e+04	-3664.35	3.328e+05
16	102	6.064e+05	846.91	0.10	-420.00	0.0	6.437e+04	-4330.36	-75.42	2.368e+04	846.91	6.064e+05
		3.340e+05	-3678.08	3.59e-04	0.0	60.0	6.437e+04	-4750.36	-75.42	2.368e+04	-3678.08	3.340e+05
17	2	1.386e+06	-1.554e+04	0.37	-546.00	0.0	1.690e+05	-1.590e+04	-481.86	1.261e+05	-1.554e+04	1.386e+06
		4.155e+05	-4.445e+04	1.03e-03	0.0	60.0	1.690e+05	-1.645e+04	-481.86	1.261e+05	-4.445e+04	4.155e+05
17	19	4.800e+05	-3393.14	0.11	-420.00	0.0	5.250e+04	-4758.16	-130.66	2.496e+04	-3393.14	4.800e+05
		1.819e+05	-1.123e+04	3.35e-04	0.0	60.0	5.250e+04	-5178.16	-130.66	2.496e+04	-1.123e+04	1.819e+05
17	22	5.136e+05	-4342.20	0.11	-420.00	0.0	5.675e+04	-5111.88	-127.99	2.873e+04	-4342.20	5.136e+05
		1.977e+05	-1.289e+04	2.03e-04	0.0	60.0	5.675e+04	-5531.88	-127.99	2.873e+04	-1.289e+04	1.977e+05
17	31	5.210e+05	-2633.33	0.11	-420.00	0.0	5.632e+04	-5175.93	-155.34	2.528e+04	-2633.33	5.210e+05
		1.944e+05	-1.152e+04	5.26e-04	0.0	60.0	5.632e+04	-5595.93	-155.34	2.528e+04	-1.152e+04	1.944e+05
17	34	5.133e+05	-4697.68	0.11	-420.00	0.0	5.678e+04	-5107.79	-126.50	2.872e+04	-4697.68	5.133e+05
		1.977e+05	-1.275e+04	1.94e-04	0.0	60.0	5.678e+04	-5527.79	-126.50	2.872e+04	-1.275e+04	1.977e+05
17	35	5.210e+05	-2658.46	0.11	-420.00	0.0	5.632e+04	-5175.93	-155.35	2.528e+04	-2658.46	5.210e+05
		1.944e+05	-1.152e+04	5.26e-04	0.0	60.0	5.632e+04	-5595.93	-155.35	2.528e+04	-1.152e+04	1.944e+05
17	36	5.201e+05	-2634.97	0.11	-420.00	0.0	5.637e+04	-5171.23	-155.42	2.530e+04	-2634.97	5.201e+05
		1.938e+05	-1.154e+04	5.25e-04	0.0	60.0	5.637e+04	-5591.23	-155.42	2.530e+04	-1.154e+04	1.938e+05
17	54	5.158e+05	-3928.98	0.11	-420.00	0.0	5.663e+04	-5130.51	-136.03	2.767e+04	-3928.98	5.158e+05
		1.967e+05	-1.242e+04	3.01e-04	0.0	60.0	5.663e+04	-5550.51	-136.03	2.767e+04	-1.242e+04	1.967e+05
17	63	5.186e+05	-3283.40	0.11	-420.00	0.0	5.646e+04	-5154.75	-146.38	2.633e+04	-3283.40	5.186e+05
		1.955e+05	-1.190e+04	4.23e-04	0.0	60.0	5.646e+04	-5574.75	-146.38	2.633e+04	-1.190e+04	1.955e+05
17	66	5.157e+05	-4063.16	0.11	-420.00	0.0	5.664e+04	-5128.96	-135.47	2.767e+04	-4063.16	5.157e+05
		1.967e+05	-1.237e+04	2.97e-04	0.0	60.0	5.664e+04	-5548.96	-135.47	2.767e+04	-1.237e+04	1.967e+05
17	67	5.186e+05	-3292.99	0.11	-420.00	0.0	5.646e+04	-5154.75	-146.38	2.633e+04	-3292.99	5.186e+05
		1.955e+05	-1.190e+04	4.23e-04	0.0	60.0	5.646e+04	-5574.75	-146.38	2.633e+04	-1.190e+04	1.955e+05
17	68	5.183e+05	-3284.03	0.11	-420.00	0.0	5.648e+04	-5152.95	-146.41	2.634e+04	-3284.03	5.183e+05
		1.952e+05	-1.191e+04	4.23e-04	0.0	60.0	5.648e+04	-5572.95	-146.41	2.634e+04	-1.191e+04	1.952e+05
17	85	5.172e+05	-3678.07	0.11	-420.00	0.0	5.655e+04	-5141.86	-140.92	2.700e+04	-3678.07	5.172e+05
		1.961e+05	-1.213e+04	3.60e-04	0.0	60.0	5.655e+04	-5561.86	-140.92	2.700e+04	-1.213e+04	1.961e+05
17	87	9.930e+05	-1.085e+04	0.26	-420.00	0.0	1.202e+05	-1.129e+04	-340.03	8.769e+04	-1.085e+04	9.930e+05
		3.032e+05	-3.125e+04	7.36e-04	0.0	60.0	1.202e+05	-1.171e+04	-340.03	8.769e+04	-3.125e+04	3.032e+05
17	94	4.924e+05	-3488.12	0.11	-420.00	0.0	5.385e+04	-4886.06	-134.08	2.564e+04	-3488.12	4.924e+05
		1.866e+05	-1.153e+04	3.43e-04	0.0	60.0	5.385e+04	-5306.06	-134.08	2.564e+04	-1.153e+04	1.866e+05
17	97	9.645e+05	-1.028e+04	0.25	-420.00	0.0	1.159e+05	-1.087e+04	-325.40	8.266e+04	-1.028e+04	9.645e+05
		2.997e+05	-2.980e+04	7.12e-04	0.0	60.0	1.159e+05	-1.129e+04	-325.40	8.266e+04	-2.980e+04	2.997e+05
17	101	5.154e+05	-3664.34	0.11	-420.00	0.0	5.636e+04	-5123.59	-140.44	2.690e+04	-3664.34	5.154e+05
		1.954e+05	-1.209e+04	3.59e-04	0.0	60.0	5.636e+04	-5543.59	-140.44	2.690e+04	-1.209e+04	1.954e+05
17	102	5.172e+05	-3678.07	0.11	-420.00	0.0	5.655e+04	-5141.86	-140.92	2.700e+04	-3678.07	5.172e+05
		1.961e+05	-1.213e+04	3.60e-04	0.0	60.0	5.655e+04	-5561.86	-140.92	2.700e+04	-1.213e+04	1.961e+05
18	2	1.025e+06	-4.445e+04	0.39	-546.00	0.0	1.430e+05	-1.743e+04	-733.81	1.248e+05	-4.445e+04	1.025e+06
		-3.724e+04	-8.848e+04	6.38e-04	0.0	60.0	1.430e+05	-1.798e+04	-733.81	1.248e+05	-8.848e+04	-3.724e+04
18	19	3.755e+05	-1.123e+04	0.11	-420.00	0.0	4.423e+04	-5500.68	-200.28	2.668e+04	-1.123e+04	3.755e+05
		3.289e+04	-2.325e+04	2.53e-04	0.0	60.0	4.423e+04	-5920.68	-200.28	2.668e+04	-2.325e+04	3.289e+04
18	20	8.995e+05	-4.069e+04	0.35	-420.00	0.0	1.282e+05	-1.559e+04	-666.76	1.158e+05	-4.069e+04	8.995e+05
		-4.828e+04	-8.069e+04	5.54e-04	0.0	60.0	1.282e+05	-1.601e+04	-666.76	1.158e+05	-8.069e+04	-4.828e+04
18	22	4.002e+05	-1.289e+04	0.12	-420.00	0.0	4.782e+04	-5903.98	-211.11	3.063e+04	-1.289e+04	4.002e+05
		3.336e+04	-2.595e+04	1.18e-04	0.0	60.0	4.782e+04	-6323.98	-211.11	3.063e+04	-2.595e+04	3.336e+04
18	23	4.091e+05	-1.137e+04	0.12	-420.00	0.0	4.747e+04	-5979.97	-220.94	2.710e+04	-1.137e+04	4.091e+05
		3.772e+04	-2.424e+04	4.28e-04	0.0	60.0	4.747e+04	-6399.97	-220.94	2.710e+04	-2.424e+04	3.772e+04
18	26	4.002e+05	-1.289e+04	0.12	-420.00	0.0	4.782e+04	-5903.96	-211.10	3.063e+04	-1.289e+04	4.002e+05
		3.335e+04	-2.595e+04	1.18e-04	0.0	60.0	4.782e+04	-6323.96	-211.10	3.063e+04	-2.595e+04	3.335e+04
18	27	4.091e+05	-1.137e+04	0.12	-420.00	0.0	4.747e+04	-5979.99	-220.95	2.710e+04	-1.137e+04	4.091e+05
		3.773e+04	-2.424e+04	4.28e-04	0.0	60.0	4.747e+04	-6399.99	-220.95	2.710e+04	-2.424e+04	3.773e+04
18	35	4.094e+05	-1.152e+04	0.12	-420.00	0.0	4.748e+04	-5986.12	-222.82	2.710e+04	-1.152e+04	4.094e+05
		3.772e+04	-2.447e+04	4.41e-04	0.0	60.0	4.748e+04	-6406.12	-222.82	2.710e+04	-2.447e+04	3.772e+04
18	54	4.030e+05	-1.242e+04	0.12	-420.00	0.0	4.771e+04	-5927.59	-214.16	2.955e+04	-1.242e+04	4.030e+05

Trave	Cmb	M3 mx/mn	M2 mx/mn	D 2 / D 3	Q 2 / Q 3	Pos.	N	V 2	V 3	T	M 2	M 3
		3.471e+04	-2.542e+04	2.14e-04	0.0	60.0	4.771e+04	-6347.59	-214.16	2.955e+04	-2.542e+04	3.471e+04
18	55	4.063e+05	-1.185e+04	0.12	-420.00	0.0	4.758e+04	-5956.36	-217.89	2.818e+04	-1.185e+04	4.063e+05
		3.637e+04	-2.477e+04	3.31e-04	0.0	60.0	4.758e+04	-6376.36	-217.89	2.818e+04	-2.477e+04	3.637e+04
18	58	4.030e+05	-1.242e+04	0.12	-420.00	0.0	4.771e+04	-5927.58	-214.16	2.956e+04	-1.242e+04	4.030e+05
		3.471e+04	-2.542e+04	2.14e-04	0.0	60.0	4.771e+04	-6347.58	-214.16	2.956e+04	-2.542e+04	3.471e+04
18	59	4.063e+05	-1.185e+04	0.12	-420.00	0.0	4.758e+04	-5956.37	-217.89	2.818e+04	-1.185e+04	4.063e+05
		3.637e+04	-2.477e+04	3.31e-04	0.0	60.0	4.758e+04	-6376.37	-217.89	2.818e+04	-2.477e+04	3.637e+04
18	67	4.065e+05	-1.190e+04	0.12	-420.00	0.0	4.758e+04	-5958.68	-218.60	2.817e+04	-1.190e+04	4.065e+05
		3.637e+04	-2.486e+04	3.36e-04	0.0	60.0	4.758e+04	-6378.68	-218.60	2.817e+04	-2.486e+04	3.637e+04
18	85	4.047e+05	-1.213e+04	0.12	-420.00	0.0	4.764e+04	-5941.97	-216.02	2.887e+04	-1.213e+04	4.047e+05
		3.554e+04	-2.509e+04	2.73e-04	0.0	60.0	4.764e+04	-6361.97	-216.02	2.887e+04	-2.509e+04	3.554e+04
18	87	7.373e+05	-3.125e+04	0.28	-420.00	0.0	1.017e+05	-1.241e+04	-518.01	8.705e+04	-3.125e+04	7.373e+05
		-2.009e+04	-6.233e+04	4.62e-04	0.0	60.0	1.017e+05	-1.283e+04	-518.01	8.705e+04	-6.233e+04	-2.009e+04
18	94	3.852e+05	-1.153e+04	0.12	-420.00	0.0	4.537e+04	-5647.78	-205.53	2.741e+04	-1.153e+04	3.852e+05
		3.377e+04	-2.386e+04	2.60e-04	0.0	60.0	4.537e+04	-6067.78	-205.53	2.741e+04	-2.386e+04	3.377e+04
18	95	7.346e+05	-3.117e+04	0.28	-420.00	0.0	1.013e+05	-1.237e+04	-516.52	8.684e+04	-3.117e+04	7.346e+05
		-2.034e+04	-6.216e+04	4.60e-04	0.0	60.0	1.013e+05	-1.279e+04	-516.52	8.684e+04	-6.216e+04	-2.034e+04
18	97	7.190e+05	-2.980e+04	0.27	-420.00	0.0	9.802e+04	-1.199e+04	-495.91	8.235e+04	-2.980e+04	7.190e+05
		-1.316e+04	-5.956e+04	4.53e-04	0.0	60.0	9.802e+04	-1.241e+04	-495.91	8.235e+04	-5.956e+04	-1.316e+04
18	101	4.033e+05	-1.209e+04	0.12	-420.00	0.0	4.748e+04	-5920.96	-215.28	2.876e+04	-1.209e+04	4.033e+05
		3.541e+04	-2.501e+04	2.72e-04	0.0	60.0	4.748e+04	-6340.96	-215.28	2.876e+04	-2.501e+04	3.541e+04
18	102	4.047e+05	-1.213e+04	0.12	-420.00	0.0	4.764e+04	-5941.97	-216.02	2.887e+04	-1.213e+04	4.047e+05
		3.554e+04	-2.509e+04	2.73e-04	0.0	60.0	4.764e+04	-6361.97	-216.02	2.887e+04	-2.509e+04	3.554e+04
19	2	5.531e+05	-8.848e+04	0.40	-546.00	0.0	1.177e+05	-1.866e+04	-695.13	1.085e+05	-8.848e+04	5.531e+05
		-5.826e+05	-1.302e+05	-3.12e-04	0.0	60.0	1.177e+05	-1.920e+04	-695.13	1.085e+05	-1.302e+05	-5.826e+05
19	7	2.329e+05	-2.325e+04	0.12	-420.00	0.0	3.567e+04	-6150.10	-193.46	2.453e+04	-2.325e+04	2.329e+05
		-1.487e+05	-3.486e+04	4.56e-05	0.0	60.0	3.567e+04	-6570.10	-193.46	2.453e+04	-3.486e+04	-1.487e+05
19	19	2.329e+05	-2.325e+04	0.12	-420.00	0.0	3.567e+04	-6150.10	-193.47	2.453e+04	-2.325e+04	2.329e+05
		-1.487e+05	-3.486e+04	4.56e-05	0.0	60.0	3.567e+04	-6570.10	-193.47	2.453e+04	-3.486e+04	-1.487e+05
19	23	2.563e+05	-2.424e+04	0.13	-420.00	0.0	3.817e+04	-6689.87	-195.77	2.483e+04	-2.424e+04	2.563e+05
		-1.576e+05	-3.736e+04	1.72e-04	0.0	60.0	3.817e+04	-7109.87	-195.77	2.483e+04	-3.736e+04	-1.576e+05
19	26	2.457e+05	-2.595e+04	0.13	-420.00	0.0	3.865e+04	-6593.73	-221.45	2.824e+04	-2.595e+04	2.457e+05
		-1.625e+05	-3.786e+04	-1.25e-04	0.0	60.0	3.865e+04	-7013.73	-221.45	2.824e+04	-3.786e+04	-1.625e+05
19	27	2.563e+05	-2.424e+04	0.13	-420.00	0.0	3.817e+04	-6689.90	-195.78	2.483e+04	-2.424e+04	2.563e+05
		-1.576e+05	-3.736e+04	1.72e-04	0.0	60.0	3.817e+04	-7109.90	-195.78	2.483e+04	-3.736e+04	-1.576e+05
19	30	2.453e+05	-2.572e+04	0.13	-420.00	0.0	3.863e+04	-6586.49	-219.56	2.826e+04	-2.572e+04	2.453e+05
		-1.625e+05	-3.794e+04	-1.41e-04	0.0	60.0	3.863e+04	-7006.49	-219.56	2.826e+04	-3.794e+04	-1.625e+05
19	35	2.567e+05	-2.447e+04	0.13	-420.00	0.0	3.819e+04	-6697.16	-197.68	2.481e+04	-2.447e+04	2.567e+05
		-1.577e+05	-3.728e+04	1.88e-04	0.0	60.0	3.819e+04	-7117.16	-197.68	2.481e+04	-3.728e+04	-1.577e+05
19	55	2.530e+05	-2.477e+04	0.13	-420.00	0.0	3.832e+04	-6660.00	-203.76	2.587e+04	-2.477e+04	2.530e+05
		-1.592e+05	-3.752e+04	8.72e-05	0.0	60.0	3.832e+04	-7080.00	-203.76	2.587e+04	-3.752e+04	-1.592e+05
19	58	2.490e+05	-2.542e+04	0.13	-420.00	0.0	3.850e+04	-6623.62	-213.47	2.720e+04	-2.542e+04	2.490e+05
		-1.610e+05	-3.771e+04	-3.28e-05	0.0	60.0	3.850e+04	-7043.62	-213.47	2.720e+04	-3.771e+04	-1.610e+05
19	59	2.530e+05	-2.477e+04	0.13	-420.00	0.0	3.832e+04	-6660.01	-203.76	2.587e+04	-2.477e+04	2.530e+05
		-1.592e+05	-3.752e+04	8.72e-05	0.0	60.0	3.832e+04	-7080.01	-203.76	2.587e+04	-3.752e+04	-1.592e+05
19	62	2.489e+05	-2.533e+04	0.13	-420.00	0.0	3.849e+04	-6620.88	-212.75	2.721e+04	-2.533e+04	2.489e+05
		-1.610e+05	-3.774e+04	-3.89e-05	0.0	60.0	3.849e+04	-7040.88	-212.75	2.721e+04	-3.774e+04	-1.610e+05
19	67	2.532e+05	-2.486e+04	0.13	-420.00	0.0	3.833e+04	-6662.76	-204.48	2.587e+04	-2.486e+04	2.532e+05
		-1.592e+05	-3.749e+04	9.22e-05	0.0	60.0	3.833e+04	-7082.76	-204.48	2.587e+04	-3.749e+04	-1.592e+05
19	85	2.510e+05	-2.509e+04	0.13	-420.00	0.0	3.841e+04	-6641.82	-208.61	2.654e+04	-2.509e+04	2.510e+05
		-1.601e+05	-3.761e+04	4.86e-05	0.0	60.0	3.841e+04	-7061.82	-208.61	2.654e+04	-3.761e+04	-1.601e+05
19	87	4.022e+05	-6.233e+04	0.28	-420.00	0.0	8.357e+04	-1.332e+04	-491.24	7.587e+04	-6.233e+04	4.022e+05
		-4.098e+05	-9.181e+04	-2.05e-04	0.0	60.0	8.357e+04	-1.374e+04	-491.24	7.587e+04	-9.181e+04	-4.098e+05
19	88	2.389e+05	-2.386e+04	0.12	-420.00	0.0	3.658e+04	-6314.01	-198.51	2.520e+04	-2.386e+04	2.389e+05
		-1.525e+05	-3.578e+04	4.66e-05	0.0	60.0	3.658e+04	-6734.01	-198.51	2.520e+04	-3.578e+04	-1.525e+05
19	94	2.389e+05	-2.386e+04	0.12	-420.00	0.0	3.658e+04	-6314.01	-198.52	2.520e+04	-2.386e+04	2.389e+05
		-1.525e+05	-3.578e+04	4.66e-05	0.0	60.0	3.658e+04	-6734.01	-198.52	2.520e+04	-3.578e+04	-1.525e+05
19	97	3.964e+05	-5.956e+04	0.27	-420.00	0.0	8.047e+04	-1.291e+04	-470.76	7.197e+04	-5.956e+04	3.964e+05
		-3.907e+05	-8.781e+04	-1.82e-04	0.0	60.0	8.047e+04	-1.333e+04	-470.76	7.197e+04	-8.781e+04	-3.907e+05
19	98	2.501e+05	-2.501e+04	0.13	-420.00	0.0	3.828e+04	-6618.40	-207.89	2.644e+04	-2.501e+04	2.501e+05
		-1.596e+05	-3.748e+04	4.85e-05	0.0	60.0	3.828e+04	-7038.40	-207.89	2.644e+04	-3.748e+04	-1.596e+05
19	101	2.501e+05	-2.501e+04	0.13	-420.00	0.0	3.828e+04	-6618.40	-207.89	2.644e+04	-2.501e+04	2.501e+05
		-1.596e+05	-3.748e+04	4.85e-05	0.0	60.0	3.828e+04	-7038.40	-207.89	2.644e+04	-3.748e+04	-1.596e+05
19	102	2.510e+05	-2.509e+04	0.13	-420.00	0.0	3.841e+04	-6641.82	-208.61	2.654e+04	-2.509e+04	2.510e+05
		-1.601e+05	-3.761e+04	4.86e-05	0.0	60.0	3.841e+04	-7061.82	-208.61	2.654e+04	-3.761e+04	-1.601e+05
20	2	-2.778e+05	0.06	0.39	-546.00	0.0	1.052e+05	-2.360e+04	2169.85	7851.89	-1.302e+05	-2.778e+05
		-1.710e+06	-1.302e+05	-2.62e-03	0.0	60.0	1.052e+05	-2.414e+04	2169.85	7851.89	0.06	-1.710e+06
20	7	-1.649e+04	0.01	0.12	-420.00	0.0	3.018e+04	-7827.96	580.96	-68.46	-3.486e+04	-1.649e+04
		-4.988e+05	-3.486e+04	-5.76e-04	0.0	60.0	3.018e+04	-8247.96	580.96	-68.46	0.01	-4.988e+05
20	19	-1.649e+04	0.01	0.12	-420.00	0.0	3.018e+04	-7827.93	580.97	-69.45	-3.486e+04	-1.649e+04
		-4.988e+05	-3.486e+04	-5.76e-04	0.0	60.0	3.018e+04	-8247.93	580.97	-69.45	0.01	-4.988e+05
20	26	-2.453e+04	0.02	0.12	-420.00	0.0	3.291e+04	-8499.43	631.07	1084.23	-3.786e+04	-2.453e+04
		-5.422e+05	-3.786e+04	-7.74e-04	0.0	60.0	3.291e+04	-8919.43	631.07	1084.23	0.02	-5.422e+05
20	30	-2.508e+04	0.02	0.12	-420.00	0.0	3.292e+04	-8505.28	632.38	1110.04	-3.794e+04	-2.508e+04
		-5.421e+05	-3.794e+04	-7.92e-04	0.0	60.0	3.292e+04	-8925.28	632.38	1110.04	0.02	-5.421e+05

Trave	Cmb	M3 mx/mn	M2 mx/mn	D 2 / D 3	Q 2 / Q 3	Pos.	N	V 2	V 3	T	M 2	M 3
20	34	-2.508e+04	0.02	0.12	-420.00	0.0	3.292e+04	-8505.34	632.37	1108.73	-3.794e+04	-2.508e+04
		-5.421e+05	-3.794e+04	-7.92e-04	0.0	60.0	3.292e+04	-8925.34	632.37	1108.73	0.02	-5.421e+05
20	35	-1.032e+04	0.01	0.12	-420.00	0.0	3.209e+04	-8388.27	621.35	-1170.98	-3.728e+04	-1.032e+04
		-5.321e+05	-3.728e+04	-4.54e-04	0.0	60.0	3.209e+04	-8808.27	621.35	-1170.98	0.01	-5.321e+05
20	58	-2.028e+04	0.01	0.12	-420.00	0.0	3.266e+04	-8466.83	628.46	402.63	-3.771e+04	-2.028e+04
		-5.390e+05	-3.771e+04	-6.80e-04	0.0	60.0	3.266e+04	-8886.83	628.46	402.63	0.01	-5.390e+05
20	62	-2.049e+04	0.01	0.12	-420.00	0.0	3.266e+04	-8469.03	628.95	412.16	-3.774e+04	-2.049e+04
		-5.390e+05	-3.774e+04	-6.87e-04	0.0	60.0	3.266e+04	-8889.03	628.95	412.16	0.01	-5.390e+05
20	66	-2.049e+04	0.01	0.12	-420.00	0.0	3.266e+04	-8469.05	628.95	411.66	-3.774e+04	-2.049e+04
		-5.390e+05	-3.774e+04	-6.87e-04	0.0	60.0	3.266e+04	-8889.05	628.95	411.66	0.01	-5.390e+05
20	67	-1.491e+04	0.01	0.12	-420.00	0.0	3.235e+04	-8424.55	624.78	-473.91	-3.749e+04	-1.491e+04
		-5.352e+05	-3.749e+04	-5.59e-04	0.0	60.0	3.235e+04	-8844.55	624.78	-473.91	0.01	-5.352e+05
20	85	-1.770e+04	0.01	0.12	-420.00	0.0	3.250e+04	-8446.80	626.86	-31.13	-3.761e+04	-1.770e+04
		-5.371e+05	-3.761e+04	-6.23e-04	0.0	60.0	3.250e+04	-8866.80	626.86	-31.13	0.01	-5.371e+05
20	87	-1.875e+05	0.04	0.27	-420.00	0.0	7.449e+04	-1.686e+04	1530.15	5230.44	-9.181e+04	-1.875e+05
		-1.212e+06	-9.181e+04	-1.83e-03	0.0	60.0	7.449e+04	-1.728e+04	1530.15	5230.44	0.04	-1.212e+06
20	88	-1.689e+04	0.01	0.12	-420.00	0.0	3.095e+04	-8034.24	596.26	-56.01	-3.578e+04	-1.689e+04
		-5.115e+05	-3.578e+04	-5.92e-04	0.0	60.0	3.095e+04	-8454.24	596.26	-56.01	0.01	-5.115e+05
20	94	-1.689e+04	0.01	0.12	-420.00	0.0	3.095e+04	-8034.22	596.27	-56.68	-3.578e+04	-1.689e+04
		-5.115e+05	-3.578e+04	-5.92e-04	0.0	60.0	3.095e+04	-8454.22	596.27	-56.68	0.01	-5.115e+05
20	97	-1.712e+05	0.04	0.26	-420.00	0.0	7.148e+04	-1.634e+04	1463.42	4723.61	-8.781e+04	-1.712e+05
		-1.164e+06	-8.781e+04	-1.73e-03	0.0	60.0	7.148e+04	-1.676e+04	1463.42	4723.61	0.04	-1.164e+06
20	98	-1.764e+04	0.01	0.12	-420.00	0.0	3.239e+04	-8417.34	624.68	-32.83	-3.748e+04	-1.764e+04
		-5.353e+05	-3.748e+04	-6.21e-04	0.0	60.0	3.239e+04	-8837.34	624.68	-32.83	0.01	-5.353e+05
20	101	-1.764e+04	0.01	0.12	-420.00	0.0	3.239e+04	-8417.33	624.68	-33.16	-3.748e+04	-1.764e+04
		-5.353e+05	-3.748e+04	-6.21e-04	0.0	60.0	3.239e+04	-8837.33	624.68	-33.16	0.01	-5.353e+05
20	102	-1.770e+04	0.01	0.12	-420.00	0.0	3.250e+04	-8446.80	626.86	-31.13	-3.761e+04	-1.770e+04
		-5.371e+05	-3.761e+04	-6.23e-04	0.0	60.0	3.250e+04	-8866.80	626.86	-31.13	0.01	-5.371e+05
21	2	-6.212e+04	0.02	-0.42	-546.00	0.0	1.010e+05	2.674e+04	-291.28	-3.792e+04	0.02	-1.650e+06
		-1.650e+06	-1.748e+04	7.93e-04	0.0	60.0	1.010e+05	2.620e+04	-291.28	-3.792e+04	-1.748e+04	-6.212e+04
21	7	-1.933e+04	2.28e-03	-0.11	-420.00	0.0	2.981e+04	7986.55	-104.26	-3705.32	2.28e-03	-4.859e+05
		-4.859e+05	-6255.45	1.42e-04	0.0	60.0	2.981e+04	7566.55	-104.26	-3705.32	-6255.45	-1.933e+04
21	21	-2.288e+04	3.67e-03	-0.12	-420.00	0.0	3.219e+04	8567.00	-127.46	-5660.66	3.67e-03	-5.242e+05
		-5.242e+05	-7647.33	3.05e-04	0.0	60.0	3.219e+04	8147.00	-127.46	-5660.66	-7647.33	-2.288e+04
21	28	-1.868e+04	1.25e-03	-0.12	-420.00	0.0	3.201e+04	8603.01	-95.94	-2391.23	1.25e-03	-5.224e+05
		-5.224e+05	-5756.67	3.35e-06	0.0	60.0	3.201e+04	8183.01	-95.94	-2391.23	-5756.67	-1.868e+04
21	33	-2.279e+04	3.54e-03	-0.12	-420.00	0.0	3.220e+04	8569.53	-93.22	-5624.69	3.54e-03	-5.243e+05
		-5.243e+05	-5592.94	2.88e-04	0.0	60.0	3.220e+04	8149.53	-93.22	-5624.69	-5592.94	-2.279e+04
21	35	-1.918e+04	1.38e-03	-0.12	-420.00	0.0	3.201e+04	8609.39	-130.37	-2370.28	1.38e-03	-5.224e+05
		-5.224e+05	-7822.15	1.81e-05	0.0	60.0	3.201e+04	8189.39	-130.37	-2370.28	-7822.15	-1.918e+04
21	36	-1.877e+04	1.38e-03	-0.12	-420.00	0.0	3.200e+04	8600.50	-130.19	-2398.90	1.38e-03	-5.223e+05
		-5.223e+05	-7811.10	1.75e-05	0.0	60.0	3.200e+04	8180.50	-130.19	-2398.90	-7811.10	-1.877e+04
21	53	-2.157e+04	2.92e-03	-0.12	-420.00	0.0	3.213e+04	8578.24	-117.71	-4653.08	2.92e-03	-5.236e+05
		-5.236e+05	-7062.75	2.10e-04	0.0	60.0	3.213e+04	8158.24	-117.71	-4653.08	-7062.75	-2.157e+04
21	60	-1.999e+04	2.00e-03	-0.12	-420.00	0.0	3.206e+04	8591.78	-105.69	-3381.26	2.00e-03	-5.229e+05
		-5.229e+05	-6341.28	9.49e-05	0.0	60.0	3.206e+04	8171.78	-105.69	-3381.26	-6341.28	-1.999e+04
21	65	-2.154e+04	2.87e-03	-0.12	-420.00	0.0	3.214e+04	8579.20	-104.67	-4639.46	2.87e-03	-5.237e+05
		-5.237e+05	-6279.97	2.04e-04	0.0	60.0	3.214e+04	8159.20	-104.67	-4639.46	-6279.97	-2.154e+04
21	67	-2.018e+04	2.05e-03	-0.12	-420.00	0.0	3.206e+04	8594.24	-118.81	-3373.25	2.05e-03	-5.230e+05
		-5.230e+05	-7128.31	1.02e-04	0.0	60.0	3.206e+04	8174.24	-118.81	-3373.25	-7128.31	-2.018e+04
21	68	-2.002e+04	2.05e-03	-0.12	-420.00	0.0	3.206e+04	8590.83	-118.73	-3384.13	2.05e-03	-5.229e+05
		-5.229e+05	-7124.07	1.01e-04	0.0	60.0	3.206e+04	8170.83	-118.73	-3384.13	-7124.07	-2.002e+04
21	85	-2.078e+04	2.46e-03	-0.12	-420.00	0.0	3.210e+04	8585.01	-111.70	-4011.80	2.46e-03	-5.233e+05
		-5.233e+05	-6702.02	1.53e-04	0.0	60.0	3.210e+04	8165.01	-111.70	-4011.80	-6702.02	-2.078e+04
21	87	-4.419e+04	0.01	-0.30	-420.00	0.0	7.162e+04	1.897e+04	-209.08	-2.581e+04	0.01	-1.170e+06
		-1.170e+06	-1.254e+04	5.49e-04	0.0	60.0	7.162e+04	1.855e+04	-209.08	-2.581e+04	-1.254e+04	-4.419e+04
21	88	-1.982e+04	2.34e-03	-0.12	-420.00	0.0	3.057e+04	8186.04	-106.74	-3807.48	2.34e-03	-4.984e+05
		-4.984e+05	-6404.30	1.45e-04	0.0	60.0	3.057e+04	7766.04	-106.74	-3807.48	-6404.30	-1.982e+04
21	97	-4.259e+04	9.74e-03	-0.28	-420.00	0.0	6.885e+04	1.824e+04	-203.17	-2.379e+04	9.74e-03	-1.124e+06
		-1.124e+06	-1.219e+04	5.15e-04	0.0	60.0	6.885e+04	1.782e+04	-203.17	-2.379e+04	-1.219e+04	-4.259e+04
21	98	-2.071e+04	2.45e-03	-0.12	-420.00	0.0	3.199e+04	8556.52	-111.34	-3997.29	2.45e-03	-5.215e+05
		-5.215e+05	-6680.68	1.52e-04	0.0	60.0	3.199e+04	8136.52	-111.34	-3997.29	-6680.68	-2.071e+04
21	102	-2.078e+04	2.46e-03	-0.12	-420.00	0.0	3.210e+04	8585.01	-111.70	-4011.80	2.46e-03	-5.233e+05
		-5.233e+05	-6702.02	1.53e-04	0.0	60.0	3.210e+04	8165.01	-111.70	-4011.80	-6702.02	-2.078e+04
22	2	8.139e+05	-1.748e+04	-0.43	-546.00	0.0	1.214e+05	2.286e+04	-199.87	-7.740e+04	-1.748e+04	-5.417e+05
		-5.417e+05	-2.947e+04	2.83e-04	0.0	60.0	1.214e+05	2.232e+04	-199.87	-7.740e+04	-2.947e+04	8.139e+05
22	7	2.251e+05	-6255.44	-0.12	-420.00	0.0	3.540e+04	6482.94	-55.01	-8519.48	-6255.44	-1.513e+05
		-1.513e+05	-9556.30	3.87e-05	0.0	60.0	3.540e+04	6062.94	-55.01	-8519.48	-9556.30	2.251e+05
22	28	2.455e+05	-5756.67	-0.13	-420.00	0.0	3.804e+04	6998.43	-50.22	-6854.51	-5756.67	-1.616e+05
		-1.616e+05	-9254.28	-1.26e-04	0.0	60.0	3.804e+04	6578.43	-50.22	-6854.51	-9254.28	2.455e+05
22	31	2.447e+05	-7822.10	-0.13	-420.00	0.0	3.806e+04	6986.99	-50.19	-6913.74	-7822.10	-1.618e+05
		-1.618e+05	-1.159e+04	-1.10e-04	0.0	60.0	3.806e+04	6566.99	-50.19	-6913.74	-1.159e+04	2.447e+05
22	33	2.396e+05	-5592.94	-0.13	-420.00	0.0	3.820e+04	6938.32	-69.48	-1.146e+04	-5592.94	-1.642e+05
		-1.642e+05	-8994.48	1.94e-04	0.0	60.0	3.820e+04	6518.32	-69.48	-1.146e+04	-8994.48	2.396e+05
22	34	2.403e+05	-5581.89	-0.13	-420.00	0.0	3.818e+04	6947.29	-69.28	-1.150e+04	-5581.89	-1.641e+05

Trave	Cmb	M3 mx/mn	M2 mx/mn	D 2 / D 3	Q 2 / Q 3	Pos.	N	V 2	V 3	T	M 2	M 3
		-1.641e+05	-8982.05	1.94e-04	0.0	60.0	3.818e+04	6527.29	-69.28	-1.150e+04	-8982.05	2.403e+05
22	36	2.454e+05	-7811.10	-0.13	-420.00	0.0	3.803e+04	6995.94	-49.98	-6914.11	-7811.10	-1.616e+05
		-1.616e+05	-1.158e+04	-1.10e-04	0.0	60.0	3.803e+04	6575.94	-49.98	-6914.11	-1.158e+04	2.454e+05
22	60	2.436e+05	-6341.27	-0.13	-420.00	0.0	3.809e+04	6979.00	-56.10	-8283.54	-6341.27	-1.624e+05
		-1.624e+05	-9896.23	-2.15e-05	0.0	60.0	3.809e+04	6559.00	-56.10	-8283.54	-9896.23	2.436e+05
22	63	2.433e+05	-7128.29	-0.13	-420.00	0.0	3.810e+04	6974.63	-56.09	-8305.37	-7128.29	-1.625e+05
		-1.625e+05	-1.078e+04	-1.52e-05	0.0	60.0	3.810e+04	6554.63	-56.09	-8305.37	-1.078e+04	2.433e+05
22	65	2.414e+05	-6279.96	-0.13	-420.00	0.0	3.815e+04	6956.20	-63.46	-1.007e+04	-6279.96	-1.634e+05
		-1.634e+05	-9797.91	9.96e-05	0.0	60.0	3.815e+04	6536.20	-63.46	-1.007e+04	-9797.91	2.414e+05
22	66	2.417e+05	-6275.73	-0.13	-420.00	0.0	3.814e+04	6959.64	-63.38	-1.009e+04	-6275.73	-1.634e+05
		-1.634e+05	-9793.17	9.94e-05	0.0	60.0	3.814e+04	6539.64	-63.38	-1.009e+04	-9793.17	2.417e+05
22	68	2.436e+05	-7124.07	-0.13	-420.00	0.0	3.809e+04	6978.06	-56.01	-8305.51	-7124.07	-1.624e+05
		-1.624e+05	-1.077e+04	-1.55e-05	0.0	60.0	3.809e+04	6558.06	-56.01	-8305.51	-1.077e+04	2.436e+05
22	85	2.425e+05	-6702.02	-0.13	-420.00	0.0	3.812e+04	6967.13	-59.73	-9189.06	-6702.02	-1.629e+05
		-1.629e+05	-1.029e+04	4.21e-05	0.0	60.0	3.812e+04	6547.13	-59.73	-9189.06	-1.029e+04	2.425e+05
22	87	5.749e+05	-1.254e+04	-0.30	-420.00	0.0	8.603e+04	1.617e+04	-141.21	-5.283e+04	-1.254e+04	-3.828e+05
		-3.828e+05	-2.102e+04	1.94e-04	0.0	60.0	8.603e+04	1.575e+04	-141.21	-5.283e+04	-2.102e+04	5.749e+05
22	88	2.309e+05	-6404.30	-0.12	-420.00	0.0	3.630e+04	6644.34	-56.59	-8742.67	-6404.30	-1.552e+05
		-1.552e+05	-9799.52	3.98e-05	0.0	60.0	3.630e+04	6224.34	-56.59	-8742.67	-9799.52	2.309e+05
22	97	5.506e+05	-1.219e+04	-0.29	-420.00	0.0	8.264e+04	1.550e+04	-135.49	-4.881e+04	-1.219e+04	-3.668e+05
		-3.668e+05	-2.032e+04	1.81e-04	0.0	60.0	8.264e+04	1.508e+04	-135.49	-4.881e+04	-2.032e+04	5.506e+05
22	98	2.417e+05	-6680.67	-0.13	-420.00	0.0	3.799e+04	6944.07	-59.51	-9157.31	-6680.67	-1.624e+05
		-1.624e+05	-1.025e+04	4.19e-05	0.0	60.0	3.799e+04	6524.07	-59.51	-9157.31	-1.025e+04	2.417e+05
22	102	2.425e+05	-6702.02	-0.13	-420.00	0.0	3.812e+04	6967.13	-59.73	-9189.06	-6702.02	-1.629e+05
		-1.629e+05	-1.029e+04	4.21e-05	0.0	60.0	3.812e+04	6547.13	-59.73	-9189.06	-1.029e+04	2.425e+05
23	2	1.364e+06	-2.393e+04	-0.42	-546.00	0.0	1.535e+05	2.182e+04	92.35	-1.008e+05	-2.947e+04	7.138e+04
		7.138e+04	-2.947e+04	-2.15e-04	0.0	60.0	1.535e+05	2.127e+04	92.35	-1.008e+05	-2.393e+04	1.364e+06
23	7	3.665e+05	-7123.00	-0.11	-420.00	0.0	4.398e+04	5877.63	40.55	-1.167e+04	-9556.30	2.647e+04
		2.647e+04	-9556.30	-8.40e-05	0.0	60.0	4.398e+04	5457.63	40.55	-1.167e+04	-7123.00	3.665e+05
23	19	3.665e+05	-7123.59	-0.11	-420.00	0.0	4.398e+04	5877.64	40.56	-1.167e+04	-9557.25	2.647e+04
		2.647e+04	-9557.25	-8.40e-05	0.0	60.0	4.398e+04	5457.64	40.56	-1.167e+04	-7123.59	3.665e+05
23	25	3.922e+05	-8548.66	-0.12	-420.00	0.0	4.746e+04	6298.48	32.70	-1.486e+04	-1.132e+04	2.687e+04
		2.687e+04	-1.132e+04	8.15e-05	0.0	60.0	4.746e+04	5878.48	32.70	-1.486e+04	-8548.66	3.922e+05
23	28	3.976e+05	-6814.13	-0.12	-420.00	0.0	4.727e+04	6332.80	54.12	-1.033e+04	-9254.28	3.031e+04
		3.031e+04	-9254.28	-2.62e-04	0.0	60.0	4.727e+04	5912.80	54.12	-1.033e+04	-6814.13	3.976e+05
23	31	3.966e+05	-6626.21	-0.12	-420.00	0.0	4.731e+04	6324.50	52.66	-1.035e+04	-1.159e+04	2.985e+04
		2.985e+04	-1.159e+04	-2.49e-04	0.0	60.0	4.731e+04	5904.50	52.66	-1.035e+04	-6626.21	3.966e+05
23	32	3.975e+05	-6602.63	-0.12	-420.00	0.0	4.727e+04	6331.47	52.50	-1.032e+04	-1.158e+04	3.026e+04
		3.026e+04	-1.158e+04	-2.49e-04	0.0	60.0	4.727e+04	5911.47	52.50	-1.032e+04	-6602.63	3.975e+05
23	57	3.939e+05	-8008.06	-0.12	-420.00	0.0	4.740e+04	6309.11	39.34	-1.348e+04	-1.068e+04	2.794e+04
		2.794e+04	-1.068e+04	-2.53e-05	0.0	60.0	4.740e+04	5889.11	39.34	-1.348e+04	-8008.06	3.939e+05
23	60	3.959e+05	-7354.73	-0.12	-420.00	0.0	4.733e+04	6322.18	47.48	-1.171e+04	-9896.23	2.924e+04
		2.924e+04	-9896.23	-1.55e-04	0.0	60.0	4.733e+04	5902.18	47.48	-1.171e+04	-7354.73	3.959e+05
23	63	3.956e+05	-7283.30	-0.12	-420.00	0.0	4.734e+04	6319.00	46.93	-1.172e+04	-1.078e+04	2.906e+04
		2.906e+04	-1.078e+04	-1.50e-04	0.0	60.0	4.734e+04	5899.00	46.93	-1.172e+04	-7283.30	3.956e+05
23	64	3.959e+05	-7274.31	-0.12	-420.00	0.0	4.733e+04	6321.67	46.87	-1.171e+04	-1.077e+04	2.922e+04
		2.922e+04	-1.077e+04	-1.50e-04	0.0	60.0	4.733e+04	5901.67	46.87	-1.171e+04	-7274.31	3.959e+05
23	85	3.949e+05	-7681.40	-0.12	-420.00	0.0	4.737e+04	6315.64	43.41	-1.260e+04	-1.029e+04	2.859e+04
		2.859e+04	-1.029e+04	-9.02e-05	0.0	60.0	4.737e+04	5895.64	43.41	-1.260e+04	-7681.40	3.949e+05
23	87	9.621e+05	-1.698e+04	-0.29	-420.00	0.0	1.087e+05	1.539e+04	67.36	-6.889e+04	-2.102e+04	5.140e+04
		5.140e+04	-2.102e+04	-1.55e-04	0.0	60.0	1.087e+05	1.497e+04	67.36	-6.889e+04	-1.698e+04	9.621e+05
23	88	3.760e+05	-7309.13	-0.12	-420.00	0.0	4.511e+04	6023.63	41.51	-1.198e+04	-9799.52	2.718e+04
		2.718e+04	-9799.52	-8.61e-05	0.0	60.0	4.511e+04	5603.63	41.51	-1.198e+04	-7309.13	3.760e+05
23	94	3.760e+05	-7309.53	-0.12	-420.00	0.0	4.511e+04	6023.64	41.51	-1.198e+04	-9800.15	2.718e+04
		2.718e+04	-9800.15	-8.61e-05	0.0	60.0	4.511e+04	5603.64	41.51	-1.198e+04	-7309.53	3.760e+05
23	97	9.200e+05	-1.633e+04	-0.28	-420.00	0.0	1.043e+05	1.471e+04	66.43	-6.373e+04	-2.032e+04	5.021e+04
		5.021e+04	-2.032e+04	-1.52e-04	0.0	60.0	1.043e+05	1.429e+04	66.43	-6.373e+04	-1.633e+04	9.200e+05
23	98	3.936e+05	-7654.76	-0.12	-420.00	0.0	4.720e+04	6294.78	43.27	-1.255e+04	-1.025e+04	2.849e+04
		2.849e+04	-1.025e+04	-8.99e-05	0.0	60.0	4.720e+04	5874.78	43.27	-1.255e+04	-7654.76	3.936e+05
23	101	3.936e+05	-7654.96	-0.12	-420.00	0.0	4.720e+04	6294.79	43.28	-1.255e+04	-1.025e+04	2.849e+04
		2.849e+04	-1.025e+04	-8.99e-05	0.0	60.0	4.720e+04	5874.79	43.28	-1.255e+04	-7654.96	3.936e+05
23	102	3.949e+05	-7681.40	-0.12	-420.00	0.0	4.737e+04	6315.64	43.41	-1.260e+04	-1.029e+04	2.859e+04
		2.859e+04	-1.029e+04	-9.02e-05	0.0	60.0	4.737e+04	5895.64	43.41	-1.260e+04	-7681.40	3.949e+05
24	2	1.811e+06	-1.569e+04	-0.39	-546.00	0.0	1.858e+05	2.022e+04	137.26	-1.054e+05	-2.393e+04	6.149e+05
		6.149e+05	-2.393e+04	-4.76e-04	0.0	60.0	1.858e+05	1.967e+04	137.26	-1.054e+05	-1.569e+04	1.811e+06
24	7	4.715e+05	-3341.71	-0.11	-420.00	0.0	5.215e+04	5125.77	63.02	-1.178e+04	-7123.00	1.765e+05
		1.765e+05	-7123.00	-1.52e-04	0.0	60.0	5.215e+04	4705.77	63.02	-1.178e+04	-3341.71	4.715e+05
24	19	4.715e+05	-3341.98	-0.11	-420.00	0.0	5.215e+04	5125.78	63.03	-1.177e+04	-7123.59	1.765e+05
		1.765e+05	-7123.59	-1.52e-04	0.0	60.0	5.215e+04	4705.78	63.03	-1.177e+04	-3341.98	4.715e+05
24	24	5.102e+05	-2560.62	-0.11	-420.00	0.0	5.604e+04	5514.86	83.07	-1.053e+04	-6812.70	1.920e+05
		1.920e+05	-6812.70	-3.32e-04	0.0	60.0	5.604e+04	5094.86	83.07	-1.053e+04	-2560.62	5.102e+05
24	25	5.058e+05	-4635.98	-0.11	-420.00	0.0	5.630e+04	5496.66	52.56	-1.489e+04	-8548.66	1.885e+05
		1.885e+05	-8548.66	1.05e-05	0.0	60.0	5.630e+04	5076.66	52.56	-1.489e+04	-4635.98	5.058e+05
24	28	5.102e+05	-2589.18	-0.11	-420.00	0.0	5.604e+04	5514.87	83.07	-1.053e+04	-6814.13	1.920e+05
		1.920e+05	-6814.13	-3.32e-04	0.0	60.0	5.604e+04	5094.87	83.07	-1.053e+04	-2589.18	5.102e+05

Trave	Cmb	M3 mx/mn	M2 mx/mn	D 2 / D 3	Q 2 / Q 3	Pos.	N	V 2	V 3	T	M 2	M 3
24	29	5.059e+05	-4438.70	-0.11	-420.00	0.0	5.629e+04	5497.37	53.91	-1.490e+04	-8760.16	1.885e+05
		1.885e+05	-8760.16	6.32e-06	0.0	60.0	5.629e+04	5077.37	53.91	-1.490e+04	-4438.70	5.059e+05
24	56	5.088e+05	-3215.15	-0.11	-420.00	0.0	5.612e+04	5509.24	73.59	-1.186e+04	-7354.19	1.909e+05
		1.909e+05	-7354.19	-2.27e-04	0.0	60.0	5.612e+04	5089.24	73.59	-1.186e+04	-3215.15	5.088e+05
24	57	5.071e+05	-3999.13	-0.11	-420.00	0.0	5.622e+04	5502.28	62.04	-1.356e+04	-8008.06	1.896e+05
		1.896e+05	-8008.06	-9.93e-05	0.0	60.0	5.622e+04	5082.28	62.04	-1.356e+04	-3999.13	5.071e+05
24	60	5.088e+05	-3226.03	-0.11	-420.00	0.0	5.612e+04	5509.24	73.59	-1.186e+04	-7354.73	1.909e+05
		1.909e+05	-7354.73	-2.27e-04	0.0	60.0	5.612e+04	5089.24	73.59	-1.186e+04	-3226.03	5.088e+05
24	61	5.072e+05	-3924.87	-0.11	-420.00	0.0	5.622e+04	5502.54	62.55	-1.357e+04	-8088.48	1.896e+05
		1.896e+05	-8088.48	-1.02e-04	0.0	60.0	5.622e+04	5082.54	62.55	-1.357e+04	-3924.87	5.072e+05
24	85	5.080e+05	-3612.58	-0.11	-420.00	0.0	5.617e+04	5505.76	67.81	-1.271e+04	-7681.40	1.902e+05
		1.902e+05	-7681.40	-1.63e-04	0.0	60.0	5.617e+04	5085.76	67.81	-1.271e+04	-3612.58	5.080e+05
24	87	1.275e+06	-1.094e+04	-0.28	-420.00	0.0	1.313e+05	1.421e+04	100.55	-7.197e+04	-1.698e+04	4.353e+05
		4.353e+05	-1.698e+04	-3.39e-04	0.0	60.0	1.313e+05	1.379e+04	100.55	-7.197e+04	-1.094e+04	1.275e+06
24	88	4.836e+05	-3432.00	-0.11	-420.00	0.0	5.349e+04	5252.43	64.62	-1.209e+04	-7309.13	1.811e+05
		1.811e+05	-7309.13	-1.55e-04	0.0	60.0	5.349e+04	4832.43	64.62	-1.209e+04	-3432.00	4.836e+05
24	94	4.836e+05	-3432.18	-0.11	-420.00	0.0	5.349e+04	5252.44	64.62	-1.209e+04	-7309.53	1.811e+05
		1.811e+05	-7309.53	-1.55e-04	0.0	60.0	5.349e+04	4832.44	64.62	-1.209e+04	-3432.18	4.836e+05
24	97	1.217e+06	-1.035e+04	-0.26	-420.00	0.0	1.259e+05	1.354e+04	99.74	-6.653e+04	-1.633e+04	4.178e+05
		4.178e+05	-1.633e+04	-3.28e-04	0.0	60.0	1.259e+05	1.312e+04	99.74	-6.653e+04	-1.035e+04	1.217e+06
24	98	5.062e+05	-3599.66	-0.11	-420.00	0.0	5.598e+04	5487.67	67.59	-1.267e+04	-7654.76	1.896e+05
		1.896e+05	-7654.76	-1.63e-04	0.0	60.0	5.598e+04	5067.67	67.59	-1.267e+04	-3599.66	5.062e+05
24	101	5.062e+05	-3599.76	-0.11	-420.00	0.0	5.598e+04	5487.67	67.59	-1.267e+04	-7654.96	1.896e+05
		1.896e+05	-7654.96	-1.63e-04	0.0	60.0	5.598e+04	5067.67	67.59	-1.267e+04	-3599.76	5.062e+05
24	102	5.080e+05	-3612.58	-0.11	-420.00	0.0	5.617e+04	5505.76	67.81	-1.271e+04	-7681.40	1.902e+05
		1.902e+05	-7681.40	-1.63e-04	0.0	60.0	5.617e+04	5085.76	67.81	-1.271e+04	-3612.58	5.080e+05
25	2	2.212e+06	-1.349e+04	-0.35	-546.00	0.0	2.159e+05	1.864e+04	36.75	-9.635e+04	-1.569e+04	1.110e+06
		1.110e+06	-1.569e+04	-5.31e-04	0.0	60.0	2.159e+05	1.809e+04	36.75	-9.635e+04	-1.349e+04	2.212e+06
25	7	5.553e+05	-448.36	-0.09	-420.00	0.0	5.926e+04	4364.06	48.22	-1.033e+04	-3341.71	3.061e+05
		3.061e+05	-3341.71	-1.68e-04	0.0	60.0	5.926e+04	3944.06	48.22	-1.033e+04	-448.36	5.553e+05
25	19	5.553e+05	-448.41	-0.09	-420.00	0.0	5.926e+04	4364.07	48.23	-1.033e+04	-3341.98	3.061e+05
		3.061e+05	-3341.98	-1.68e-04	0.0	60.0	5.926e+04	3944.07	48.23	-1.033e+04	-448.41	5.553e+05
25	21	5.967e+05	-2313.60	-0.10	-420.00	0.0	6.373e+04	4676.35	33.95	-1.335e+04	-4664.55	3.306e+05
		3.306e+05	-4664.55	-2.26e-05	0.0	60.0	6.373e+04	4256.35	33.95	-1.335e+04	-2313.60	5.967e+05
25	24	5.999e+05	1322.36	-0.10	-420.00	0.0	6.393e+04	4693.92	69.95	-8953.99	-2560.62	3.289e+05
		3.289e+05	-2560.62	-3.40e-04	0.0	60.0	6.393e+04	4273.92	69.95	-8953.99	1322.36	5.999e+05
25	26	5.976e+05	-2311.78	-0.10	-420.00	0.0	6.367e+04	4677.90	33.90	-1.335e+04	-4662.85	3.315e+05
		3.315e+05	-4662.85	-2.27e-05	0.0	60.0	6.367e+04	4257.90	33.90	-1.335e+04	-2311.78	5.976e+05
25	27	5.990e+05	1320.53	-0.10	-420.00	0.0	6.398e+04	4692.37	70.00	-8954.07	-2562.32	3.281e+05
		3.281e+05	-2562.32	-3.39e-04	0.0	60.0	6.398e+04	4272.37	70.00	-8954.07	1320.53	5.990e+05
25	47	5.971e+05	94.14	-0.10	-420.00	0.0	6.396e+04	4684.96	57.43	-1.050e+04	-3256.76	3.281e+05
		3.281e+05	-3256.76	-2.28e-04	0.0	60.0	6.396e+04	4264.96	57.43	-1.050e+04	94.14	5.971e+05
25	48	6.001e+05	-4.57	-0.10	-420.00	0.0	6.377e+04	4690.12	57.28	-1.048e+04	-3346.31	3.308e+05
		3.308e+05	-3346.31	-2.29e-04	0.0	60.0	6.377e+04	4270.12	57.28	-1.048e+04	-4.57	6.001e+05
25	53	5.977e+05	-1183.54	-0.10	-420.00	0.0	6.379e+04	4681.81	45.14	-1.200e+04	-4010.01	3.301e+05
		3.301e+05	-4010.01	-1.21e-04	0.0	60.0	6.379e+04	4261.81	45.14	-1.200e+04	-1183.54	5.977e+05
25	56	5.989e+05	192.30	-0.10	-420.00	0.0	6.386e+04	4688.46	58.76	-1.030e+04	-3215.15	3.295e+05
		3.295e+05	-3215.15	-2.41e-04	0.0	60.0	6.386e+04	4268.46	58.76	-1.030e+04	192.30	5.989e+05
25	58	5.981e+05	-1182.84	-0.10	-420.00	0.0	6.377e+04	4682.41	45.12	-1.200e+04	-4009.36	3.304e+05
		3.304e+05	-4009.36	-1.21e-04	0.0	60.0	6.377e+04	4262.41	45.12	-1.200e+04	-1182.84	5.981e+05
25	59	5.985e+05	191.60	-0.10	-420.00	0.0	6.389e+04	4687.86	58.77	-1.030e+04	-3215.81	3.292e+05
		3.292e+05	-3215.81	-2.41e-04	0.0	60.0	6.389e+04	4267.86	58.77	-1.030e+04	191.60	5.985e+05
25	79	5.978e+05	-272.35	-0.10	-420.00	0.0	6.388e+04	4685.05	54.02	-1.090e+04	-3478.03	3.291e+05
		3.291e+05	-3478.03	-1.99e-04	0.0	60.0	6.388e+04	4265.05	54.02	-1.090e+04	-272.35	5.978e+05
25	80	5.990e+05	-309.94	-0.10	-420.00	0.0	6.381e+04	4687.03	53.96	-1.089e+04	-3512.13	3.302e+05
		3.302e+05	-3512.13	-1.99e-04	0.0	60.0	6.381e+04	4267.03	53.96	-1.089e+04	-309.94	5.990e+05
25	85	5.983e+05	-495.62	-0.10	-420.00	0.0	6.383e+04	4685.13	51.95	-1.115e+04	-3612.58	3.298e+05
		3.298e+05	-3612.58	-1.81e-04	0.0	60.0	6.383e+04	4265.13	51.95	-1.115e+04	-495.62	5.983e+05
25	87	1.554e+06	-9057.21	-0.25	-420.00	0.0	1.524e+05	1.305e+04	31.43	-6.572e+04	-1.094e+04	7.839e+05
		7.839e+05	-1.094e+04	-3.78e-04	0.0	60.0	1.524e+05	1.263e+04	31.43	-6.572e+04	-9057.21	1.554e+06
25	88	5.696e+05	-464.11	-0.10	-420.00	0.0	6.078e+04	4471.08	49.46	-1.061e+04	-3432.00	3.140e+05
		3.140e+05	-3432.00	-1.72e-04	0.0	60.0	6.078e+04	4051.08	49.46	-1.061e+04	-464.11	5.696e+05
25	94	5.696e+05	-464.15	-0.10	-420.00	0.0	6.078e+04	4471.09	49.47	-1.060e+04	-3432.18	3.140e+05
		3.140e+05	-3432.18	-1.72e-04	0.0	60.0	6.078e+04	4051.09	49.47	-1.060e+04	-464.15	5.696e+05
25	97	1.481e+06	-8225.35	-0.24	-420.00	0.0	1.459e+05	1.238e+04	35.40	-6.069e+04	-1.035e+04	7.507e+05
		7.507e+05	-1.035e+04	-3.65e-04	0.0	60.0	1.459e+05	1.196e+04	35.40	-6.069e+04	-8225.35	1.481e+06
25	98	5.963e+05	-493.37	-0.10	-420.00	0.0	6.361e+04	4669.84	51.77	-1.111e+04	-3599.66	3.287e+05
		3.287e+05	-3599.66	-1.80e-04	0.0	60.0	6.361e+04	4249.84	51.77	-1.111e+04	-493.37	5.963e+05
25	101	5.963e+05	-493.38	-0.10	-420.00	0.0	6.361e+04	4669.85	51.77	-1.111e+04	-3599.76	3.287e+05
		3.287e+05	-3599.76	-1.80e-04	0.0	60.0	6.361e+04	4249.85	51.77	-1.111e+04	-493.38	5.963e+05
25	102	5.983e+05	-495.62	-0.10	-420.00	0.0	6.383e+04	4685.13	51.95	-1.115e+04	-3612.58	3.298e+05
		3.298e+05	-3612.58	-1.81e-04	0.0	60.0	6.383e+04	4265.13	51.95	-1.115e+04	-495.62	5.983e+05
26	1	8.285e+05	1601.47	-0.11	-546.00	0.0	8.697e+04	4802.54	36.75	-1.125e+04	-603.81	5.567e+05
		5.567e+05	-603.81	-2.05e-04	0.0	60.0	8.697e+04	4256.54	36.75	-1.125e+04	1601.47	8.285e+05
26	2	2.590e+06	-1.349e+04	-0.30	-546.00	0.0	2.434e+05	1.726e+04	-53.35	-7.661e+04	-1.349e+04	1.571e+06

Trave	Cmb	M3 mx/mn	M2 mx/mn	D 2 / D 3	Q 2 / Q 3	Pos.	N	V 2	V 3	T	M 2	M 3
		1.571e+06	-1.669e+04	-4.74e-04	0.0	60.0	2.434e+05	1.671e+04	-53.35	-7.661e+04	-1.669e+04	2.590e+06
26	7	6.209e+05	1204.14	-0.08	-420.00	0.0	6.519e+04	3604.89	27.54	-8426.12	-448.36	4.172e+05
		4.172e+05	-448.36	-1.54e-04	0.0	60.0	6.519e+04	3184.89	27.54	-8426.12	1204.14	6.209e+05
26	8	2.382e+06	-1.333e+04	-0.27	-420.00	0.0	2.216e+05	1.606e+04	-62.56	-7.379e+04	-1.333e+04	1.431e+06
		1.431e+06	-1.708e+04	-4.23e-04	0.0	60.0	2.216e+05	1.564e+04	-62.56	-7.379e+04	-1.708e+04	2.382e+06
26	21	6.691e+05	-1464.16	-0.09	-420.00	0.0	7.010e+04	3854.02	11.54	-1.136e+04	-2313.60	4.500e+05
		4.500e+05	-2313.60	-2.55e-05	0.0	60.0	7.010e+04	3434.02	11.54	-1.136e+04	-1464.16	6.691e+05
26	24	6.688e+05	4035.34	-0.09	-420.00	0.0	7.033e+04	3880.45	47.83	-6828.09	1322.36	4.490e+05
		4.490e+05	1322.36	-3.06e-04	0.0	60.0	7.033e+04	3460.45	47.83	-6828.09	4035.34	6.688e+05
26	26	6.700e+05	-1462.39	-0.09	-420.00	0.0	7.005e+04	3855.53	11.53	-1.136e+04	-2311.78	4.509e+05
		4.509e+05	-2311.78	-2.35e-05	0.0	60.0	7.005e+04	3435.53	11.53	-1.136e+04	-1462.39	6.700e+05
26	27	6.680e+05	4033.58	-0.09	-420.00	0.0	7.039e+04	3878.93	47.85	-6828.08	1320.53	4.481e+05
		4.481e+05	1320.53	-3.08e-04	0.0	60.0	7.039e+04	3458.93	47.85	-6828.08	4033.58	6.680e+05
26	46	6.705e+05	417.44	-0.09	-420.00	0.0	7.008e+04	3866.02	24.22	-9759.42	-1085.38	4.513e+05
		4.513e+05	-1085.38	-1.17e-04	0.0	60.0	7.008e+04	3446.02	24.22	-9759.42	417.44	6.705e+05
26	47	6.674e+05	2153.74	-0.09	-420.00	0.0	7.035e+04	3868.44	35.16	-8423.89	94.14	4.477e+05
		4.477e+05	94.14	-2.14e-04	0.0	60.0	7.035e+04	3448.44	35.16	-8423.89	2153.74	6.674e+05
26	53	6.690e+05	245.11	-0.09	-420.00	0.0	7.017e+04	3862.25	22.83	-9961.64	-1183.54	4.497e+05
		4.497e+05	-1183.54	-1.13e-04	0.0	60.0	7.017e+04	3442.25	22.83	-9961.64	245.11	6.690e+05
26	56	6.689e+05	2326.07	-0.09	-420.00	0.0	7.026e+04	3872.21	36.54	-8221.68	192.30	4.493e+05
		4.493e+05	192.30	-2.19e-04	0.0	60.0	7.026e+04	3452.21	36.54	-8221.68	2326.07	6.689e+05
26	58	6.693e+05	245.78	-0.09	-420.00	0.0	7.015e+04	3862.83	22.82	-9961.65	-1182.84	4.501e+05
		4.501e+05	-1182.84	-1.12e-04	0.0	60.0	7.015e+04	3442.83	22.82	-9961.65	245.78	6.693e+05
26	59	6.686e+05	2325.40	-0.09	-420.00	0.0	7.028e+04	3871.63	36.55	-8221.67	191.60	4.490e+05
		4.490e+05	191.60	-2.19e-04	0.0	60.0	7.028e+04	3451.63	36.55	-8221.67	2325.40	6.686e+05
26	78	6.695e+05	956.98	-0.09	-420.00	0.0	7.017e+04	3866.80	27.62	-9348.36	-718.89	4.502e+05
		4.502e+05	-718.89	-1.47e-04	0.0	60.0	7.017e+04	3446.80	27.62	-9348.36	956.98	6.695e+05
26	79	6.684e+05	1614.20	-0.09	-420.00	0.0	7.027e+04	3867.67	31.75	-8834.96	-272.35	4.488e+05
		4.488e+05	-272.35	-1.84e-04	0.0	60.0	7.027e+04	3447.67	31.75	-8834.96	1614.20	6.684e+05
26	85	6.690e+05	1285.59	-0.09	-420.00	0.0	7.022e+04	3867.23	29.69	-9091.66	-495.62	4.495e+05
		4.495e+05	-495.62	-1.66e-04	0.0	60.0	7.022e+04	3447.23	29.69	-9091.66	1285.59	6.690e+05
26	86	6.415e+05	1239.06	-0.08	-420.00	0.0	6.735e+04	3717.32	28.46	-8710.93	-468.62	4.311e+05
		4.311e+05	-468.62	-1.59e-04	0.0	60.0	6.735e+04	3297.32	28.46	-8710.93	1239.06	6.415e+05
26	87	1.816e+06	-9057.20	-0.21	-420.00	0.0	1.716e+05	1.202e+04	-31.61	-5.229e+04	-9057.20	1.107e+06
		1.107e+06	-1.095e+04	-3.38e-04	0.0	60.0	1.716e+05	1.160e+04	-31.61	-5.229e+04	-1.095e+04	1.816e+06
26	88	6.369e+05	1231.29	-0.08	-420.00	0.0	6.687e+04	3692.34	28.26	-8647.97	-464.12	4.280e+05
		4.280e+05	-464.12	-1.58e-04	0.0	60.0	6.687e+04	3272.34	28.26	-8647.97	1231.29	6.369e+05
26	89	1.811e+06	-9052.69	-0.21	-420.00	0.0	1.711e+05	1.200e+04	-31.81	-5.222e+04	-9052.69	1.104e+06
		1.104e+06	-1.096e+04	-3.37e-04	0.0	60.0	1.711e+05	1.158e+04	-31.81	-5.222e+04	-1.096e+04	1.811e+06
26	96	6.690e+05	1285.59	-0.09	-420.00	0.0	7.022e+04	3867.23	29.69	-9091.66	-495.62	4.495e+05
		4.495e+05	-495.62	-1.66e-04	0.0	60.0	7.022e+04	3447.23	29.69	-9091.66	1285.59	6.690e+05
26	97	1.726e+06	-8225.34	-0.20	-420.00	0.0	1.640e+05	1.134e+04	-24.38	-4.831e+04	-8225.34	1.058e+06
		1.058e+06	-9687.87	-3.27e-04	0.0	60.0	1.640e+05	1.092e+04	-24.38	-4.831e+04	-9687.87	1.726e+06
26	98	6.667e+05	1281.70	-0.09	-420.00	0.0	6.998e+04	3854.74	29.58	-9060.18	-493.37	4.480e+05
		4.480e+05	-493.37	-1.65e-04	0.0	60.0	6.998e+04	3434.74	29.58	-9060.18	1281.70	6.667e+05
26	102	6.690e+05	1285.59	-0.09	-420.00	0.0	7.022e+04	3867.23	29.69	-9091.66	-495.62	4.495e+05
		4.495e+05	-495.62	-1.66e-04	0.0	60.0	7.022e+04	3447.23	29.69	-9091.66	1285.59	6.690e+05
27	1	8.923e+05	2603.27	-0.09	-546.00	0.0	9.331e+04	3793.69	16.70	-8663.41	1601.47	6.810e+05
		6.810e+05	1601.47	-1.66e-04	0.0	60.0	9.331e+04	3247.69	16.70	-8663.41	2603.27	8.923e+05
27	2	2.760e+06	-1.669e+04	-0.23	-546.00	0.0	2.654e+05	1.167e+04	-51.15	-4.871e+04	-1.669e+04	2.076e+06
		2.076e+06	-1.976e+04	-3.83e-04	0.0	60.0	2.654e+05	1.112e+04	-51.15	-4.871e+04	-1.976e+04	2.760e+06
27	7	6.687e+05	1954.64	-0.07	-420.00	0.0	6.994e+04	2848.77	12.51	-6491.38	1204.14	5.104e+05
		5.104e+05	1204.14	-1.25e-04	0.0	60.0	6.994e+04	2428.77	12.51	-6491.38	1954.64	6.687e+05
27	8	2.536e+06	-1.708e+04	-0.21	-420.00	0.0	2.420e+05	1.073e+04	-55.34	-4.654e+04	-1.708e+04	1.905e+06
		1.905e+06	-2.041e+04	-3.42e-04	0.0	60.0	2.420e+05	1.031e+04	-55.34	-4.654e+04	-2.041e+04	2.536e+06
27	21	7.209e+05	-1464.16	-0.07	-420.00	0.0	7.520e+04	3035.64	-2.76	-9169.10	-1464.16	5.502e+05
		5.502e+05	-1525.54	-1.96e-05	0.0	60.0	7.520e+04	2615.64	-2.76	-9169.10	-1525.54	7.209e+05
27	24	7.201e+05	5715.69	-0.07	-420.00	0.0	7.546e+04	3069.65	29.74	-4830.65	4035.33	5.497e+05
		5.497e+05	4035.33	-2.49e-04	0.0	60.0	7.546e+04	2649.65	29.74	-4830.65	5715.69	7.201e+05
27	26	7.215e+05	-1462.39	-0.07	-420.00	0.0	7.515e+04	3040.05	-2.77	-9169.10	-1462.39	5.511e+05
		5.511e+05	-1524.03	-1.96e-05	0.0	60.0	7.515e+04	2620.05	-2.77	-9169.10	-1524.03	7.215e+05
27	27	7.195e+05	5714.18	-0.07	-420.00	0.0	7.551e+04	3065.23	29.75	-4830.64	4033.57	5.488e+05
		5.488e+05	4033.57	-2.49e-04	0.0	60.0	7.551e+04	2645.23	29.75	-4830.64	5714.18	7.195e+05
27	50	7.218e+05	1107.25	-0.07	-420.00	0.0	7.521e+04	3055.66	8.39	-7595.45	575.61	5.517e+05
		5.517e+05	575.61	-9.79e-05	0.0	60.0	7.521e+04	2635.66	8.39	-7595.45	1107.25	7.218e+05
27	51	7.192e+05	3082.89	-0.07	-420.00	0.0	7.545e+04	3049.63	18.60	-6404.29	1995.57	5.482e+05
		5.482e+05	1995.57	-1.71e-04	0.0	60.0	7.545e+04	2629.63	18.60	-6404.29	3082.89	7.192e+05
27	53	7.206e+05	725.35	-0.07	-420.00	0.0	7.528e+04	3046.23	7.35	-7828.97	245.11	5.500e+05
		5.500e+05	245.11	-9.10e-05	0.0	60.0	7.528e+04	2626.23	7.35	-7828.97	725.35	7.206e+05
27	56	7.204e+05	3464.80	-0.07	-420.00	0.0	7.538e+04	3059.06	19.63	-6170.78	2326.07	5.499e+05
		5.499e+05	2326.07	-1.78e-04	0.0	60.0	7.538e+04	2639.06	19.63	-6170.78	3464.80	7.204e+05
27	58	7.209e+05	725.93	-0.07	-420.00	0.0	7.526e+04	3047.92	7.35	-7828.97	245.78	5.504e+05
		5.504e+05	245.78	-9.10e-05	0.0	60.0	7.526e+04	2627.92	7.35	-7828.97	725.93	7.209e+05
27	59	7.201e+05	3464.22	-0.07	-420.00	0.0	7.540e+04	3057.36	19.63	-6170.78	2325.39	5.495e+05
		5.495e+05	2325.39	-1.78e-04	0.0	60.0	7.540e+04	2637.36	19.63	-6170.78	3464.22	7.201e+05

Trave	Cmb	M3 mx/mn	M2 mx/mn	D 2 / D 3	Q 2 / Q 3	Pos.	N	V 2	V 3	T	M 2	M 3
27	82	7.210e+05	1721.20	-0.07	-420.00	0.0	7.528e+04	3053.83	11.56	-7227.79	1016.71	5.506e+05
		5.506e+05	1016.71	-1.21e-04	0.0	60.0	7.528e+04	2633.83	11.56	-7227.79	1721.20	7.210e+05
27	83	7.200e+05	2468.94	-0.07	-420.00	0.0	7.538e+04	3051.45	15.42	-6771.95	1554.47	5.493e+05
		5.493e+05	1554.47	-1.48e-04	0.0	60.0	7.538e+04	2631.45	15.42	-6771.95	2468.94	7.200e+05
27	85	7.205e+05	2095.07	-0.07	-420.00	0.0	7.533e+04	3052.64	13.49	-6999.87	1285.59	5.499e+05
		5.499e+05	1285.59	-1.34e-04	0.0	60.0	7.533e+04	2632.64	13.49	-6999.87	2095.07	7.205e+05
27	86	6.909e+05	2014.86	-0.07	-420.00	0.0	7.225e+04	2936.15	12.93	-6708.92	1239.06	5.274e+05
		5.274e+05	1239.06	-1.29e-04	0.0	60.0	7.225e+04	2516.15	12.93	-6708.92	2014.86	6.909e+05
27	87	1.936e+06	-1.095e+04	-0.16	-420.00	0.0	1.870e+05	8187.59	-32.30	-3.341e+04	-1.095e+04	1.457e+06
		1.457e+06	-1.289e+04	-2.74e-04	0.0	60.0	1.870e+05	7767.59	-32.30	-3.341e+04	-1.289e+04	1.936e+06
27	88	6.860e+05	2001.45	-0.07	-420.00	0.0	7.173e+04	2916.73	12.84	-6660.88	1231.29	5.236e+05
		5.236e+05	1231.29	-1.28e-04	0.0	60.0	7.173e+04	2496.73	12.84	-6660.88	2001.45	6.860e+05
27	89	1.931e+06	-1.096e+04	-0.16	-420.00	0.0	1.865e+05	8168.17	-32.40	-3.336e+04	-1.096e+04	1.453e+06
		1.453e+06	-1.291e+04	-2.73e-04	0.0	60.0	1.865e+05	7748.17	-32.40	-3.336e+04	-1.291e+04	1.931e+06
27	96	7.205e+05	2095.07	-0.07	-420.00	0.0	7.533e+04	3052.64	13.49	-6999.87	1285.59	5.499e+05
		5.499e+05	1285.59	-1.34e-04	0.0	60.0	7.533e+04	2632.64	13.49	-6999.87	2095.07	7.205e+05
27	97	1.841e+06	-9687.87	-0.16	-420.00	0.0	1.786e+05	7778.94	-27.22	-3.103e+04	-9687.87	1.387e+06
		1.387e+06	-1.132e+04	-2.65e-04	0.0	60.0	1.786e+05	7358.94	-27.22	-3.103e+04	-1.132e+04	1.841e+06
27	98	7.180e+05	2088.37	-0.07	-420.00	0.0	7.507e+04	3042.93	13.44	-6975.85	1281.70	5.481e+05
		5.481e+05	1281.70	-1.34e-04	0.0	60.0	7.507e+04	2622.93	13.44	-6975.85	2088.37	7.180e+05
27	102	7.205e+05	2095.07	-0.07	-420.00	0.0	7.533e+04	3052.64	13.49	-6999.87	1285.59	5.499e+05
		5.499e+05	1285.59	-1.34e-04	0.0	60.0	7.533e+04	2632.64	13.49	-6999.87	2095.07	7.205e+05
28	1	9.326e+05	2944.56	-0.06	-546.00	0.0	9.806e+04	2787.23	5.69	-6168.58	2603.27	7.817e+05
		7.817e+05	2603.27	-1.20e-04	0.0	60.0	9.806e+04	2241.23	5.69	-6168.58	2944.56	9.326e+05
28	2	2.797e+06	-1.849e+04	-0.16	-546.00	0.0	2.792e+05	6256.66	21.14	-1.591e+04	-1.976e+04	2.438e+06
		2.438e+06	-1.976e+04	-2.84e-04	0.0	60.0	2.792e+05	5710.66	21.14	-1.591e+04	-1.849e+04	2.797e+06
28	7	6.989e+05	2210.12	-0.05	-420.00	0.0	7.350e+04	2094.44	4.26	-4623.76	1954.64	5.859e+05
		5.859e+05	1954.64	-9.00e-05	0.0	60.0	7.350e+04	1674.44	4.26	-4623.76	2210.12	6.989e+05
28	8	2.564e+06	-1.922e+04	-0.14	-420.00	0.0	2.546e+05	5563.87	19.71	-1.437e+04	-2.041e+04	2.242e+06
		2.242e+06	-2.041e+04	-2.54e-04	0.0	60.0	2.546e+05	5143.87	19.71	-1.437e+04	-1.922e+04	2.564e+06
28	21	7.539e+05	-1525.54	-0.05	-420.00	0.0	7.902e+04	2222.58	-8.07	-6813.20	-1525.54	6.315e+05
		6.315e+05	-1933.17	-1.36e-05	0.0	60.0	7.902e+04	1802.58	-8.07	-6813.20	-1933.17	7.539e+05
28	24	7.521e+05	6675.61	-0.05	-420.00	0.0	7.930e+04	2257.41	17.27	-3148.67	5715.68	6.310e+05
		6.310e+05	5715.68	-1.80e-04	0.0	60.0	7.930e+04	1837.41	17.27	-3148.67	6675.61	7.521e+05
28	26	7.543e+05	-1524.03	-0.05	-420.00	0.0	7.898e+04	2229.47	-8.07	-6813.22	-1524.03	6.323e+05
		6.323e+05	-1932.07	-1.36e-05	0.0	60.0	7.898e+04	1809.47	-8.07	-6813.22	-1932.07	7.543e+05
28	27	7.517e+05	6674.51	-0.05	-420.00	0.0	7.934e+04	2250.52	17.28	-3148.65	5714.18	6.302e+05
		6.302e+05	5714.18	-1.80e-04	0.0	60.0	7.934e+04	1830.52	17.28	-3148.65	6674.51	7.517e+05
28	51	7.520e+05	3591.68	-0.05	-420.00	0.0	7.927e+04	2232.56	8.76	-4515.35	3082.89	6.296e+05
		6.296e+05	3082.89	-1.25e-04	0.0	60.0	7.927e+04	1812.56	8.76	-4515.35	3591.68	7.520e+05
28	53	7.534e+05	743.12	-0.05	-420.00	0.0	7.911e+04	2233.42	-0.18	-5678.93	725.35	6.313e+05
		6.313e+05	725.35	-6.55e-05	0.0	60.0	7.911e+04	1813.42	-0.18	-5678.93	743.12	7.534e+05
28	56	7.527e+05	3999.32	-0.05	-420.00	0.0	7.922e+04	2246.57	9.39	-4282.95	3464.80	6.311e+05
		6.311e+05	3464.80	-1.29e-04	0.0	60.0	7.922e+04	1826.57	9.39	-4282.95	3999.32	7.527e+05
28	58	7.535e+05	743.54	-0.05	-420.00	0.0	7.910e+04	2236.06	-0.18	-5678.93	725.93	6.316e+05
		6.316e+05	725.93	-6.55e-05	0.0	60.0	7.910e+04	1816.06	-0.18	-5678.93	743.54	7.535e+05
28	59	7.525e+05	3998.90	-0.05	-420.00	0.0	7.923e+04	2243.93	9.39	-4282.94	3464.22	6.308e+05
		6.308e+05	3464.22	-1.29e-04	0.0	60.0	7.923e+04	1823.93	9.39	-4282.94	3998.90	7.525e+05
28	83	7.526e+05	2832.95	-0.05	-420.00	0.0	7.921e+04	2237.11	6.17	-4803.29	2468.94	6.306e+05
		6.306e+05	2468.94	-1.08e-04	0.0	60.0	7.921e+04	1817.11	6.17	-4803.29	2832.95	7.526e+05
28	85	7.530e+05	2371.22	-0.05	-420.00	0.0	7.916e+04	2240.00	4.60	-4980.94	2095.07	6.312e+05
		6.312e+05	2095.07	-9.70e-05	0.0	60.0	7.916e+04	1820.00	4.60	-4980.94	2371.22	7.530e+05
28	86	7.221e+05	2279.21	-0.05	-420.00	0.0	7.593e+04	2156.82	4.41	-4776.51	2014.86	6.053e+05
		6.053e+05	2014.86	-9.30e-05	0.0	60.0	7.593e+04	1736.82	4.41	-4776.51	2279.21	7.221e+05
28	87	1.965e+06	-1.201e+04	-0.11	-420.00	0.0	1.967e+05	4469.78	14.70	-1.127e+04	-1.289e+04	1.710e+06
		1.710e+06	-1.289e+04	-2.02e-04	0.0	60.0	1.967e+05	4049.78	14.70	-1.127e+04	-1.201e+04	1.965e+06
28	88	7.170e+05	2263.82	-0.05	-420.00	0.0	7.539e+04	2142.96	4.37	-4742.82	2001.45	6.010e+05
		6.010e+05	2001.45	-9.23e-05	0.0	60.0	7.539e+04	1722.96	4.37	-4742.82	2263.82	7.170e+05
28	89	1.960e+06	-1.203e+04	-0.11	-420.00	0.0	1.961e+05	4455.91	14.67	-1.124e+04	-1.291e+04	1.705e+06
		1.705e+06	-1.291e+04	-2.02e-04	0.0	60.0	1.961e+05	4035.91	14.67	-1.124e+04	-1.203e+04	1.960e+06
28	96	7.530e+05	2371.22	-0.05	-420.00	0.0	7.916e+04	2240.00	4.60	-4980.94	2095.07	6.312e+05
		6.312e+05	2095.07	-9.70e-05	0.0	60.0	7.916e+04	1820.00	4.60	-4980.94	2371.22	7.530e+05
28	97	1.872e+06	-1.049e+04	-0.11	-420.00	0.0	1.878e+05	4321.65	13.87	-1.083e+04	-1.132e+04	1.625e+06
		1.625e+06	-1.132e+04	-1.95e-04	0.0	60.0	1.878e+05	3901.65	13.87	-1.083e+04	-1.049e+04	1.872e+06
28	98	7.505e+05	2363.52	-0.05	-420.00	0.0	7.889e+04	2233.06	4.59	-4964.09	2088.37	6.291e+05
		6.291e+05	2088.37	-9.67e-05	0.0	60.0	7.889e+04	1813.06	4.59	-4964.09	2363.52	7.505e+05
28	102	7.530e+05	2371.22	-0.05	-420.00	0.0	7.916e+04	2240.00	4.60	-4980.94	2095.07	6.312e+05
		6.312e+05	2095.07	-9.70e-05	0.0	60.0	7.916e+04	1820.00	4.60	-4980.94	2371.22	7.530e+05
29	1	9.494e+05	3008.92	-0.04	-546.00	0.0	1.012e+05	1781.79	1.07	-3743.10	2944.56	8.588e+05
		8.588e+05	2944.56	-7.18e-05	0.0	60.0	1.012e+05	1235.79	1.07	-3743.10	3008.92	9.494e+05
29	2	2.707e+06	-1.194e+04	-0.08	-546.00	0.0	2.845e+05	848.22	109.17	1.629e+04	-1.849e+04	2.673e+06
		2.673e+06	-1.849e+04	-1.80e-04	0.0	60.0	2.845e+05	302.22	109.17	1.629e+04	-1.194e+04	2.707e+06
29	7	7.115e+05	2257.98	-0.03	-420.00	0.0	7.587e+04	1340.86	0.80	-2807.79	2210.11	6.437e+05
		6.437e+05	2210.11	-5.38e-05	0.0	60.0	7.587e+04	920.86	0.80	-2807.79	2257.98	7.115e+05
29	8	2.469e+06	-1.269e+04	-0.07	-420.00	0.0	2.592e+05	407.29	108.89	1.722e+04	-1.922e+04	2.458e+06

Trave	Cmb	M3 mx/mn	M2 mx/mn	D 2 / D 3	Q 2 / Q 3	Pos.	N	V 2	V 3	T	M 2	M 3
		2.458e+06	-1.922e+04	-1.62e-04	0.0	60.0	2.592e+05	-12.71	108.89	1.722e+04	-1.269e+04	2.469e+06
29	21	7.679e+05	-1933.17	-0.03	-420.00	0.0	8.157e+04	1413.71	-6.85	-4277.02	-1933.17	6.941e+05
		6.941e+05	-2289.41	-1.03e-05	0.0	60.0	8.157e+04	993.71	-6.85	-4277.02	-2289.41	7.679e+05
29	24	7.652e+05	7137.08	-0.03	-420.00	0.0	8.187e+04	1442.65	8.60	-1760.14	6675.60	6.929e+05
		6.929e+05	6675.60	-1.06e-04	0.0	60.0	8.187e+04	1022.65	8.60	-1760.14	7137.08	7.652e+05
29	26	7.681e+05	-1932.07	-0.03	-420.00	0.0	8.154e+04	1422.40	-6.86	-4277.06	-1932.07	6.948e+05
		6.948e+05	-2288.84	-1.03e-05	0.0	60.0	8.154e+04	1002.40	-6.86	-4277.06	-2288.84	7.681e+05
29	27	7.651e+05	7136.50	-0.03	-420.00	0.0	8.190e+04	1433.96	8.61	-1760.11	6674.51	6.922e+05
		6.922e+05	6674.51	-1.06e-04	0.0	60.0	8.190e+04	1013.96	8.61	-1760.11	7136.50	7.651e+05
29	51	7.659e+05	3800.85	-0.03	-420.00	0.0	8.181e+04	1416.56	3.63	-2745.18	3591.68	6.921e+05
		6.921e+05	3591.68	-7.63e-05	0.0	60.0	8.181e+04	996.56	3.63	-2745.18	3800.85	7.659e+05
29	53	7.671e+05	743.12	-0.03	-420.00	0.0	8.166e+04	1422.70	-2.04	-3497.03	743.12	6.937e+05
		6.937e+05	641.31	-4.00e-05	0.0	60.0	8.166e+04	1002.70	-2.04	-3497.03	641.31	7.671e+05
29	56	7.661e+05	4206.35	-0.03	-420.00	0.0	8.178e+04	1433.66	3.79	-2540.14	3999.32	6.933e+05
		6.933e+05	3999.32	-7.60e-05	0.0	60.0	8.178e+04	1013.66	3.79	-2540.14	4206.35	7.661e+05
29	58	7.671e+05	743.54	-0.03	-420.00	0.0	8.165e+04	1426.04	-2.04	-3497.04	743.54	6.940e+05
		6.940e+05	641.53	-4.00e-05	0.0	60.0	8.165e+04	1006.04	-2.04	-3497.04	641.53	7.671e+05
29	59	7.660e+05	4206.13	-0.03	-420.00	0.0	8.179e+04	1430.32	3.80	-2540.13	3998.89	6.930e+05
		6.930e+05	3998.89	-7.61e-05	0.0	60.0	8.179e+04	1010.32	3.80	-2540.13	4206.13	7.660e+05
29	83	7.663e+05	2944.66	-0.03	-420.00	0.0	8.176e+04	1423.70	1.92	-2914.40	2832.95	6.930e+05
		6.930e+05	2832.95	-6.49e-05	0.0	60.0	8.176e+04	1003.70	1.92	-2914.40	2944.66	7.663e+05
29	85	7.666e+05	2423.83	-0.03	-420.00	0.0	8.172e+04	1428.18	0.88	-3018.58	2371.22	6.935e+05
		6.935e+05	2371.22	-5.80e-05	0.0	60.0	8.172e+04	1008.18	0.88	-3018.58	2423.83	7.666e+05
29	86	7.351e+05	2329.12	-0.03	-420.00	0.0	7.838e+04	1378.28	0.83	-2897.88	2279.20	6.650e+05
		6.650e+05	2279.20	-5.56e-05	0.0	60.0	7.838e+04	958.28	0.83	-2897.88	2329.12	7.351e+05
29	87	1.907e+06	-7635.94	-0.06	-420.00	0.0	2.006e+05	755.90	72.89	1.046e+04	-1.201e+04	1.874e+06
		1.874e+06	-1.201e+04	-1.27e-04	0.0	60.0	2.006e+05	335.90	72.89	1.046e+04	-7635.94	1.907e+06
29	88	7.299e+05	2313.26	-0.03	-420.00	0.0	7.782e+04	1369.96	0.82	-2878.05	2263.82	6.603e+05
		6.603e+05	2263.82	-5.52e-05	0.0	60.0	7.782e+04	949.96	0.82	-2878.05	2313.26	7.299e+05
29	89	1.902e+06	-7651.80	-0.06	-420.00	0.0	2.000e+05	747.59	72.89	1.048e+04	-1.203e+04	1.870e+06
		1.870e+06	-1.203e+04	-1.27e-04	0.0	60.0	2.000e+05	327.59	72.89	1.048e+04	-7651.80	1.902e+06
29	96	7.666e+05	2423.83	-0.03	-420.00	0.0	8.172e+04	1428.18	0.88	-3018.58	2371.22	6.935e+05
		6.935e+05	2371.22	-5.80e-05	0.0	60.0	8.172e+04	1008.18	0.88	-3018.58	2423.83	7.666e+05
29	97	1.821e+06	-6544.72	-0.06	-420.00	0.0	1.917e+05	868.04	65.73	9000.50	-1.049e+04	1.782e+06
		1.782e+06	-1.049e+04	-1.23e-04	0.0	60.0	1.917e+05	448.04	65.73	9000.50	-6544.72	1.821e+06
29	98	7.640e+05	2415.90	-0.03	-420.00	0.0	8.144e+04	1424.02	0.87	-3008.67	2363.52	6.911e+05
		6.911e+05	2363.52	-5.78e-05	0.0	60.0	8.144e+04	1004.02	0.87	-3008.67	2415.90	7.640e+05
29	102	7.666e+05	2423.83	-0.03	-420.00	0.0	8.172e+04	1428.18	0.88	-3018.58	2371.22	6.935e+05
		6.935e+05	2371.22	-5.80e-05	0.0	60.0	8.172e+04	1008.18	0.88	-3018.58	2423.83	7.666e+05
30	1	9.427e+05	3008.92	-0.01	-546.00	0.0	1.028e+05	776.65	-0.10	-1346.80	3008.92	9.125e+05
		9.125e+05	3003.01	-2.35e-05	0.0	60.0	1.028e+05	230.65	-0.10	-1346.80	3003.01	9.427e+05
30	2	2.775e+06	-2502.61	-0.01	-546.00	0.0	2.817e+05	-4722.57	157.27	4.258e+04	-1.194e+04	2.775e+06
		2.476e+06	-1.194e+04	-6.36e-05	0.0	60.0	2.817e+05	-5268.57	157.27	4.258e+04	-2502.61	2.476e+06
30	7	7.065e+05	2257.98	-9.84e-03	-420.00	0.0	7.706e+04	587.51	-0.08	-1013.33	2257.98	6.839e+05
		6.839e+05	2253.09	-1.76e-05	0.0	60.0	7.706e+04	167.51	-0.08	-1013.33	2253.09	7.065e+05
30	8	2.547e+06	-3252.53	-0.01	-420.00	0.0	2.559e+05	-4911.72	157.28	4.291e+04	-1.269e+04	2.547e+06
		2.239e+06	-1.269e+04	-5.77e-05	0.0	60.0	2.559e+05	-5331.72	157.28	4.291e+04	-3252.53	2.239e+06
30	26	7.628e+05	-2288.84	-0.01	-420.00	0.0	8.283e+04	617.03	2.22	-1626.91	-2288.84	7.379e+05
		7.379e+05	-2373.40	-9.21e-06	0.0	60.0	8.283e+04	197.03	2.22	-1626.91	-2373.40	7.628e+05
30	27	7.596e+05	7213.16	-0.01	-420.00	0.0	8.317e+04	616.21	-2.35	-533.92	7136.50	7.357e+05
		7.357e+05	7136.50	-2.89e-05	0.0	60.0	8.317e+04	196.21	-2.35	-533.92	7213.16	7.596e+05
30	30	7.627e+05	-2107.66	-0.01	-420.00	0.0	8.283e+04	617.48	-4.60	-1555.29	-2107.66	7.384e+05
		7.384e+05	-2373.67	9.35e-06	0.0	60.0	8.283e+04	197.48	-4.60	-1555.29	-2373.67	7.627e+05
30	31	7.597e+05	7213.43	-0.01	-420.00	0.0	8.317e+04	615.76	4.47	-605.53	6955.33	7.352e+05
		7.352e+05	6955.33	-4.74e-05	0.0	60.0	8.317e+04	195.76	4.47	-605.53	7213.43	7.597e+05
30	36	7.598e+05	7213.42	-0.01	-420.00	0.0	8.316e+04	625.39	4.46	-605.58	6955.90	7.352e+05
		7.352e+05	6955.90	-4.73e-05	0.0	60.0	8.316e+04	205.39	4.46	-605.58	7213.42	7.598e+05
30	58	7.618e+05	641.53	-0.01	-420.00	0.0	8.294e+04	616.81	0.80	-1287.84	641.53	7.372e+05
		7.372e+05	607.18	-1.53e-05	0.0	60.0	8.294e+04	196.81	0.80	-1287.84	607.18	7.618e+05
30	59	7.606e+05	4232.58	-0.01	-420.00	0.0	8.307e+04	616.43	-0.93	-872.99	4206.13	7.364e+05
		7.364e+05	4206.13	-2.27e-05	0.0	60.0	8.307e+04	196.43	-0.93	-872.99	4232.58	7.606e+05
30	62	7.618e+05	710.05	-0.01	-420.00	0.0	8.294e+04	616.98	-1.78	-1261.20	710.05	7.374e+05
		7.374e+05	607.07	-8.30e-06	0.0	60.0	8.294e+04	196.98	-1.78	-1261.20	607.07	7.618e+05
30	63	7.606e+05	4232.69	-0.01	-420.00	0.0	8.306e+04	616.26	1.65	-899.63	4137.61	7.362e+05
		7.362e+05	4137.61	-2.97e-05	0.0	60.0	8.306e+04	196.26	1.65	-899.63	4232.69	7.606e+05
30	68	7.607e+05	4232.68	-0.01	-420.00	0.0	8.306e+04	619.96	1.64	-899.64	4137.84	7.362e+05
		7.362e+05	4137.84	-2.97e-05	0.0	60.0	8.306e+04	199.96	1.64	-899.64	4232.68	7.607e+05
30	85	7.612e+05	2423.83	-0.01	-420.00	0.0	8.300e+04	616.62	-0.07	-1080.41	2423.83	7.368e+05
		7.368e+05	2419.88	-1.90e-05	0.0	60.0	8.300e+04	196.62	-0.07	-1080.41	2419.88	7.612e+05
30	86	7.300e+05	2329.12	-0.01	-420.00	0.0	7.961e+04	599.99	-0.07	-1041.92	2329.12	7.066e+05
		7.066e+05	2324.65	-1.82e-05	0.0	60.0	7.961e+04	179.99	-0.07	-1041.92	2324.65	7.300e+05
30	87	1.948e+06	-1345.75	-0.01	-420.00	0.0	1.988e+05	-3066.17	104.84	2.824e+04	-7635.94	1.948e+06
		1.752e+06	-7635.94	-4.49e-05	0.0	60.0	1.988e+05	-3486.17	104.84	2.824e+04	-1345.75	1.752e+06
30	88	7.248e+05	2313.26	-0.01	-420.00	0.0	7.904e+04	597.21	-0.08	-1035.69	2313.26	7.015e+05
		7.015e+05	2308.68	-1.81e-05	0.0	60.0	7.904e+04	177.21	-0.08	-1035.69	2308.68	7.248e+05

Trave	Cmb	M3 mx/mn	M2 mx/mn	D 2 / D 3	Q 2 / Q 3	Pos.	N	V 2	V 3	T	M 2	M 3
30	89	1.943e+06	-1361.72	-0.01	-420.00	0.0	1.983e+05	-3068.94	104.83	2.825e+04	-7651.80	1.943e+06
		1.747e+06	-7651.80	-4.48e-05	0.0	60.0	1.983e+05	-3488.94	104.83	2.825e+04	-1361.72	1.747e+06
30	92	7.248e+05	2313.26	-0.01	-420.00	0.0	7.904e+04	597.21	-0.08	-1035.69	2313.26	7.015e+05
		7.015e+05	2308.68	-1.81e-05	0.0	60.0	7.904e+04	177.21	-0.08	-1035.69	2308.68	7.248e+05
30	96	7.612e+05	2423.83	-0.01	-420.00	0.0	8.300e+04	616.62	-0.07	-1080.41	2423.83	7.368e+05
		7.368e+05	2419.88	-1.90e-05	0.0	60.0	8.300e+04	196.62	-0.07	-1080.41	2419.88	7.612e+05
30	97	1.854e+06	-883.49	-0.01	-420.00	0.0	1.903e+05	-2682.92	94.35	2.527e+04	-6544.73	1.854e+06
		1.681e+06	-6544.73	-4.31e-05	0.0	60.0	1.903e+05	-3102.92	94.35	2.527e+04	-883.49	1.681e+06
30	98	7.586e+05	2415.90	-0.01	-420.00	0.0	8.272e+04	615.23	-0.07	-1077.30	2415.90	7.343e+05
		7.343e+05	2411.90	-1.89e-05	0.0	60.0	8.272e+04	195.23	-0.07	-1077.30	2411.90	7.586e+05
30	102	7.612e+05	2423.83	-0.01	-420.00	0.0	8.300e+04	616.62	-0.07	-1080.41	2423.83	7.368e+05
		7.368e+05	2419.88	-1.90e-05	0.0	60.0	8.300e+04	196.62	-0.07	-1080.41	2419.88	7.612e+05
31	2	2.670e+06	5393.92	0.06	-546.00	0.0	2.733e+05	-6069.94	131.61	6.057e+04	-2502.62	2.670e+06
		2.290e+06	-2502.62	7.25e-05	0.0	60.0	2.733e+05	-6615.94	131.61	6.057e+04	5393.92	2.290e+06
31	7	7.065e+05	2253.09	9.82e-03	-420.00	0.0	7.706e+04	-165.80	-0.17	779.61	2253.09	7.065e+05
		6.839e+05	2242.59	1.85e-05	0.0	60.0	7.706e+04	-585.80	-0.17	779.61	2242.59	6.839e+05
31	8	2.434e+06	4646.74	0.06	-420.00	0.0	2.476e+05	-6007.32	131.65	6.030e+04	-3252.54	2.434e+06
		2.061e+06	-3252.54	6.63e-05	0.0	60.0	2.476e+05	-6427.32	131.65	6.030e+04	4646.74	2.061e+06
31	27	7.598e+05	7213.38	0.01	-420.00	0.0	8.316e+04	-203.64	-4.69	381.55	7213.38	7.598e+05
		7.353e+05	6942.05	4.81e-05	0.0	60.0	8.316e+04	-623.64	-4.69	381.55	6942.05	7.353e+05
31	29	7.627e+05	-2292.11	0.01	-420.00	0.0	8.283e+04	-195.31	-2.27	1448.30	-2373.67	7.627e+05
		7.384e+05	-2373.67	9.42e-06	0.0	60.0	8.283e+04	-615.31	-2.27	1448.30	-2292.11	7.384e+05
31	32	7.596e+05	7213.43	0.01	-420.00	0.0	8.317e+04	-194.49	1.95	262.05	7213.43	7.596e+05
		7.354e+05	7112.57	3.03e-05	0.0	60.0	8.317e+04	-614.49	1.95	262.05	7112.57	7.354e+05
31	33	7.627e+05	-2302.30	0.01	-420.00	0.0	8.283e+04	-195.33	-2.44	1400.85	-2373.44	7.627e+05
		7.379e+05	-2373.44	1.01e-05	0.0	60.0	8.283e+04	-615.33	-2.44	1400.85	-2302.30	7.379e+05
31	36	7.596e+05	7213.20	0.01	-420.00	0.0	8.317e+04	-194.47	2.12	309.50	7213.20	7.596e+05
		7.358e+05	7122.76	2.97e-05	0.0	60.0	8.317e+04	-614.47	2.12	309.50	7122.76	7.358e+05
31	59	7.606e+05	4232.67	0.01	-420.00	0.0	8.306e+04	-198.22	-1.87	674.85	4232.67	7.606e+05
		7.363e+05	4124.14	3.05e-05	0.0	60.0	8.306e+04	-618.22	-1.87	674.85	4124.14	7.363e+05
31	61	7.618e+05	631.87	0.01	-420.00	0.0	8.294e+04	-195.08	-0.96	1080.32	607.07	7.618e+05
		7.374e+05	607.07	1.59e-05	0.0	60.0	8.294e+04	-615.08	-0.96	1080.32	631.87	7.374e+05
31	64	7.606e+05	4232.69	0.01	-420.00	0.0	8.307e+04	-194.71	0.63	630.03	4232.69	7.606e+05
		7.363e+05	4188.59	2.38e-05	0.0	60.0	8.307e+04	-614.71	0.63	630.03	4188.59	7.363e+05
31	65	7.618e+05	627.98	0.01	-420.00	0.0	8.294e+04	-195.09	-1.02	1062.30	607.16	7.618e+05
		7.373e+05	607.16	1.61e-05	0.0	60.0	8.294e+04	-615.09	-1.02	1062.30	627.98	7.373e+05
31	68	7.606e+05	4232.60	0.01	-420.00	0.0	8.307e+04	-194.71	0.70	648.05	4232.60	7.606e+05
		7.365e+05	4192.48	2.36e-05	0.0	60.0	8.307e+04	-614.71	0.70	648.05	4192.48	7.365e+05
31	85	7.612e+05	2419.88	0.01	-420.00	0.0	8.300e+04	-194.90	-0.16	855.18	2419.88	7.612e+05
		7.369e+05	2410.23	1.99e-05	0.0	60.0	8.300e+04	-614.90	-0.16	855.18	2410.23	7.369e+05
31	87	1.882e+06	3917.31	0.04	-420.00	0.0	1.933e+05	-4072.62	87.72	4.049e+04	-1345.76	1.882e+06
		1.625e+06	-1345.76	5.10e-05	0.0	60.0	1.933e+05	-4492.62	87.72	4.049e+04	3917.31	1.625e+06
31	88	7.247e+05	2308.68	0.01	-420.00	0.0	7.904e+04	-175.50	-0.17	804.80	2308.68	7.247e+05
		7.016e+05	2298.47	1.90e-05	0.0	60.0	7.904e+04	-595.50	-0.17	804.80	2298.47	7.016e+05
31	89	1.876e+06	3901.24	0.04	-420.00	0.0	1.927e+05	-4069.84	87.72	4.049e+04	-1361.73	1.876e+06
		1.620e+06	-1361.73	5.08e-05	0.0	60.0	1.927e+05	-4489.84	87.72	4.049e+04	3901.24	1.620e+06
31	97	1.798e+06	3852.72	0.04	-420.00	0.0	1.853e+05	-3699.81	78.94	3.657e+04	-883.49	1.798e+06
		1.563e+06	-883.49	4.85e-05	0.0	60.0	1.853e+05	-4119.81	78.94	3.657e+04	3852.72	1.563e+06
31	98	7.586e+05	2411.90	0.01	-420.00	0.0	8.272e+04	-193.51	-0.16	851.55	2411.90	7.586e+05
		7.343e+05	2402.19	1.98e-05	0.0	60.0	8.272e+04	-613.51	-0.16	851.55	2402.19	7.343e+05
31	102	7.612e+05	2419.88	0.01	-420.00	0.0	8.300e+04	-194.90	-0.16	855.18	2419.88	7.612e+05
		7.369e+05	2410.23	1.99e-05	0.0	60.0	8.300e+04	-614.90	-0.16	855.18	2410.23	7.369e+05
32	2	2.546e+06	9465.53	0.13	-546.00	0.0	2.624e+05	-7609.85	67.86	7.028e+04	5393.91	2.546e+06
		2.073e+06	5393.91	2.12e-04	0.0	60.0	2.624e+05	-8155.85	67.86	7.028e+04	9465.53	2.073e+06
32	7	7.115e+05	2242.59	0.03	-420.00	0.0	7.587e+04	-919.17	-1.08	2585.44	2242.59	7.115e+05
		6.438e+05	2178.08	5.47e-05	0.0	60.0	7.587e+04	-1339.17	-1.08	2585.44	2178.08	6.438e+05
32	30	7.679e+05	-1961.41	0.03	-420.00	0.0	8.157e+04	-992.02	6.60	4061.34	-2302.88	7.679e+05
		6.942e+05	-2302.88	1.11e-05	0.0	60.0	8.157e+04	-1412.02	6.60	4061.34	-1961.41	6.942e+05
32	31	7.652e+05	7123.35	0.03	-420.00	0.0	8.188e+04	-1020.94	-8.85	1546.28	7123.35	7.652e+05
		6.930e+05	6646.85	1.07e-04	0.0	60.0	8.188e+04	-1440.94	-8.85	1546.28	6646.85	6.930e+05
32	33	7.681e+05	-1960.31	0.03	-420.00	0.0	8.155e+04	-1000.71	6.60	4061.37	-2302.30	7.681e+05
		6.949e+05	-2302.30	1.11e-05	0.0	60.0	8.155e+04	-1420.71	6.60	4061.37	-1960.31	6.949e+05
32	36	7.651e+05	7122.76	0.03	-420.00	0.0	8.190e+04	-1012.26	-8.85	1546.25	7122.76	7.651e+05
		6.923e+05	6645.75	1.07e-04	0.0	60.0	8.190e+04	-1432.26	-8.85	1546.25	6645.75	6.923e+05
32	48	7.660e+05	3787.24	0.03	-420.00	0.0	8.181e+04	-994.86	-3.88	2530.52	3787.24	7.660e+05
		6.922e+05	3563.13	7.71e-05	0.0	60.0	8.181e+04	-1414.86	-3.88	2530.52	3563.13	6.922e+05
32	62	7.671e+05	714.72	0.03	-420.00	0.0	8.167e+04	-1001.01	1.79	3281.92	627.76	7.671e+05
		6.938e+05	627.76	4.08e-05	0.0	60.0	8.167e+04	-1421.01	1.79	3281.92	714.72	6.938e+05
32	63	7.661e+05	4192.70	0.03	-420.00	0.0	8.178e+04	-1011.95	-4.04	2325.70	4192.70	7.661e+05
		6.934e+05	3970.72	7.69e-05	0.0	60.0	8.178e+04	-1431.95	-4.04	2325.70	3970.72	6.934e+05
32	65	7.672e+05	715.14	0.03	-420.00	0.0	8.166e+04	-1004.34	1.79	3281.93	627.98	7.672e+05
		6.941e+05	627.98	4.08e-05	0.0	60.0	8.166e+04	-1424.34	1.79	3281.93	715.14	6.941e+05
32	68	7.660e+05	4192.48	0.03	-420.00	0.0	8.179e+04	-1008.62	-4.04	2325.70	4192.48	7.660e+05
		6.931e+05	3970.30	7.69e-05	0.0	60.0	8.179e+04	-1428.62	-4.04	2325.70	3970.30	6.931e+05
32	80	7.663e+05	2931.05	0.03	-420.00	0.0	8.176e+04	-1002.00	-2.17	2699.67	2931.05	7.663e+05

Trave	Cmb	M3 mx/mn	M2 mx/mn	D 2 / D 3	Q 2 / Q 3	Pos.	N	V 2	V 3	T	M 2	M 3
		6.931e+05	2804.43	6.57e-05	0.0	60.0	8.176e+04	-1422.00	-2.17	2699.67	2804.43	6.931e+05
32	85	7.666e+05	2410.23	0.03	-420.00	0.0	8.173e+04	-1006.48	-1.13	2803.81	2410.23	7.666e+05
		6.936e+05	2342.72	5.88e-05	0.0	60.0	8.173e+04	-1426.48	-1.13	2803.81	2342.72	6.936e+05
32	87	1.799e+06	6622.71	0.09	-420.00	0.0	1.858e+05	-5207.43	45.09	4.723e+04	3917.31	1.799e+06
		1.474e+06	3917.31	1.49e-04	0.0	60.0	1.858e+05	-5627.43	45.09	4.723e+04	6622.71	1.474e+06
32	88	7.299e+05	2298.47	0.03	-420.00	0.0	7.783e+04	-948.27	-1.09	2658.23	2298.47	7.299e+05
		6.604e+05	2232.96	5.61e-05	0.0	60.0	7.783e+04	-1368.27	-1.09	2658.23	2232.96	6.604e+05
32	97	1.724e+06	6279.26	0.09	-420.00	0.0	1.784e+05	-4832.24	40.44	4.290e+04	3852.71	1.724e+06
		1.422e+06	3852.71	1.42e-04	0.0	60.0	1.784e+05	-5252.24	40.44	4.290e+04	6279.26	1.422e+06
32	98	7.640e+05	2402.19	0.03	-420.00	0.0	8.145e+04	-1002.32	-1.12	2793.44	2402.19	7.640e+05
		6.912e+05	2334.81	5.86e-05	0.0	60.0	8.145e+04	-1422.32	-1.12	2793.44	2334.81	6.912e+05
32	102	7.666e+05	2410.23	0.03	-420.00	0.0	8.173e+04	-1006.48	-1.13	2803.81	2410.23	7.666e+05
		6.936e+05	2342.72	5.88e-05	0.0	60.0	8.173e+04	-1426.48	-1.13	2803.81	2342.72	6.936e+05
33	2	2.387e+06	1.021e+04	0.19	-546.00	0.0	2.489e+05	-9241.34	12.41	7.426e+04	9465.52	2.387e+06
		1.817e+06	9465.52	3.37e-04	0.0	60.0	2.489e+05	-9787.34	12.41	7.426e+04	1.021e+04	1.817e+06
33	7	6.990e+05	2178.08	0.05	-420.00	0.0	7.350e+04	-1672.80	-4.58	4425.02	2178.08	6.990e+05
		5.860e+05	1903.36	9.09e-05	0.0	60.0	7.350e+04	-2092.80	-4.58	4425.02	1903.36	5.860e+05
33	30	7.540e+05	-1571.42	0.05	-420.00	0.0	7.903e+04	-1800.94	7.77	6619.90	-1961.41	7.540e+05
		6.316e+05	-1961.41	1.44e-05	0.0	60.0	7.903e+04	-2220.94	7.77	6619.90	-1571.42	6.316e+05
33	31	7.522e+05	6646.85	0.05	-420.00	0.0	7.931e+04	-1835.79	-17.56	2956.28	6646.85	7.522e+05
		6.311e+05	5669.37	1.81e-04	0.0	60.0	7.931e+04	-2255.79	-17.56	2956.28	5669.37	6.311e+05
33	33	7.544e+05	-1569.91	0.05	-420.00	0.0	7.899e+04	-1807.83	7.78	6619.91	-1960.31	7.544e+05
		6.324e+05	-1960.31	1.43e-05	0.0	60.0	7.899e+04	-2227.83	7.78	6619.91	-1569.91	6.324e+05
33	36	7.518e+05	6645.75	0.05	-420.00	0.0	7.935e+04	-1828.90	-17.57	2956.27	6645.75	7.518e+05
		6.303e+05	5667.86	1.81e-04	0.0	60.0	7.935e+04	-2248.90	-17.57	2956.27	5667.86	6.303e+05
33	48	7.521e+05	3563.13	0.05	-420.00	0.0	7.928e+04	-1810.93	-9.05	4322.42	3563.13	7.521e+05
		6.298e+05	3036.77	1.26e-04	0.0	60.0	7.928e+04	-2230.93	-9.05	4322.42	3036.77	6.298e+05
33	62	7.534e+05	714.72	0.05	-420.00	0.0	7.912e+04	-1811.79	-0.11	5485.92	714.72	7.534e+05
		6.315e+05	679.33	6.62e-05	0.0	60.0	7.912e+04	-2231.79	-0.11	5485.92	679.33	6.315e+05
33	63	7.527e+05	3970.72	0.05	-420.00	0.0	7.922e+04	-1824.95	-9.68	4090.27	3970.72	7.527e+05
		6.313e+05	3418.62	1.29e-04	0.0	60.0	7.922e+04	-2244.95	-9.68	4090.27	3418.62	6.313e+05
33	65	7.536e+05	715.14	0.05	-420.00	0.0	7.910e+04	-1814.43	-0.11	5485.92	715.14	7.536e+05
		6.318e+05	679.91	6.62e-05	0.0	60.0	7.910e+04	-2234.43	-0.11	5485.92	679.91	6.318e+05
33	68	7.526e+05	3970.30	0.05	-420.00	0.0	7.924e+04	-1822.30	-9.68	4090.27	3970.30	7.526e+05
		6.310e+05	3418.04	1.29e-04	0.0	60.0	7.924e+04	-2242.30	-9.68	4090.27	3418.04	6.310e+05
33	80	7.527e+05	2804.43	0.05	-420.00	0.0	7.921e+04	-1815.48	-6.47	4610.42	2804.43	7.527e+05
		6.308e+05	2422.84	1.08e-04	0.0	60.0	7.921e+04	-2235.48	-6.47	4610.42	2422.84	6.308e+05
33	85	7.531e+05	2342.72	0.05	-420.00	0.0	7.917e+04	-1818.37	-4.90	4788.09	2342.72	7.531e+05
		6.314e+05	2048.97	9.77e-05	0.0	60.0	7.917e+04	-2238.37	-4.90	4788.09	2048.97	6.314e+05
33	87	1.692e+06	7079.86	0.14	-420.00	0.0	1.765e+05	-6403.34	7.62	5.014e+04	6622.71	1.692e+06
		1.295e+06	6622.71	2.38e-04	0.0	60.0	1.765e+05	-6823.34	7.62	5.014e+04	7079.86	1.295e+06
33	88	7.170e+05	2232.96	0.05	-420.00	0.0	7.539e+04	-1721.32	-4.68	4546.04	2232.96	7.170e+05
		6.011e+05	1951.90	9.31e-05	0.0	60.0	7.539e+04	-2141.32	-4.68	4546.04	1951.90	6.011e+05
33	97	1.626e+06	6651.51	0.13	-420.00	0.0	1.697e+05	-6019.71	6.20	4.579e+04	6279.26	1.626e+06
		1.252e+06	6279.26	2.27e-04	0.0	60.0	1.697e+05	-6439.71	6.20	4.579e+04	6651.51	1.252e+06
33	98	7.505e+05	2334.81	0.05	-420.00	0.0	7.890e+04	-1811.43	-4.88	4770.89	2334.81	7.505e+05
		6.292e+05	2041.96	9.74e-05	0.0	60.0	7.890e+04	-2231.43	-4.88	4770.89	2041.96	6.292e+05
33	102	7.531e+05	2342.72	0.05	-420.00	0.0	7.917e+04	-1818.37	-4.90	4788.09	2342.72	7.531e+05
		6.314e+05	2048.97	9.77e-05	0.0	60.0	7.917e+04	-2238.37	-4.90	4788.09	2048.97	6.314e+05
34	2	2.191e+06	1.021e+04	0.25	-546.00	0.0	2.328e+05	-1.090e+04	-41.98	7.535e+04	1.021e+04	2.191e+06
		1.521e+06	7690.99	4.44e-04	0.0	60.0	2.328e+05	-1.144e+04	-41.98	7.535e+04	7690.99	1.521e+06
34	7	6.688e+05	1903.37	0.07	-420.00	0.0	6.995e+04	-2427.30	-12.89	6330.01	1903.37	6.688e+05
		5.106e+05	1129.84	1.25e-04	0.0	60.0	6.995e+04	-2847.30	-12.89	6330.01	1129.84	5.106e+05
34	30	7.209e+05	-1531.93	0.07	-420.00	0.0	7.521e+04	-2614.15	2.40	9011.45	-1571.42	7.209e+05
		5.503e+05	-1571.42	2.03e-05	0.0	60.0	7.521e+04	-3034.15	2.40	9011.45	-1531.93	5.503e+05
34	31	7.202e+05	5669.37	0.07	-420.00	0.0	7.547e+04	-2648.23	-30.10	4672.95	5669.37	7.202e+05
		5.499e+05	3967.58	2.50e-04	0.0	60.0	7.547e+04	-3068.23	-30.10	4672.95	3967.58	5.499e+05
34	33	7.216e+05	-1530.17	0.07	-420.00	0.0	7.516e+04	-2618.57	2.40	9011.45	-1569.91	7.216e+05
		5.513e+05	-1569.91	2.02e-05	0.0	60.0	7.516e+04	-3038.57	2.40	9011.45	-1530.17	5.513e+05
34	36	7.196e+05	5667.86	0.07	-420.00	0.0	7.552e+04	-2643.81	-30.11	4672.96	5667.86	7.196e+05
		5.490e+05	3965.83	2.50e-04	0.0	60.0	7.552e+04	-3063.81	-30.11	4672.96	3965.83	5.490e+05
34	45	7.219e+05	1061.18	0.07	-420.00	0.0	7.521e+04	-2634.20	-8.75	7437.97	1061.18	7.219e+05
		5.518e+05	507.73	9.86e-05	0.0	60.0	7.521e+04	-3054.20	-8.75	7437.97	507.73	5.518e+05
34	48	7.193e+05	3036.77	0.07	-420.00	0.0	7.546e+04	-2628.18	-18.96	6246.43	3036.77	7.193e+05
		5.484e+05	1927.93	1.71e-04	0.0	60.0	7.546e+04	-3048.18	-18.96	6246.43	1927.93	5.484e+05
34	62	7.207e+05	679.33	0.07	-420.00	0.0	7.529e+04	-2624.77	-7.71	7671.31	679.33	7.207e+05
		5.502e+05	177.34	9.16e-05	0.0	60.0	7.529e+04	-3044.77	-7.71	7671.31	177.34	5.502e+05
34	63	7.204e+05	3418.62	0.07	-420.00	0.0	7.539e+04	-2637.62	-19.99	6013.10	3418.62	7.204e+05
		5.500e+05	2258.31	1.78e-04	0.0	60.0	7.539e+04	-3057.62	-19.99	6013.10	2258.31	5.500e+05
34	65	7.210e+05	679.91	0.07	-420.00	0.0	7.527e+04	-2626.46	-7.71	7671.30	679.91	7.210e+05
		5.505e+05	178.02	9.16e-05	0.0	60.0	7.527e+04	-3046.46	-7.71	7671.30	178.02	5.505e+05
34	68	7.202e+05	3418.04	0.07	-420.00	0.0	7.541e+04	-2635.92	-19.99	6013.10	3418.04	7.202e+05
		5.497e+05	2257.64	1.78e-04	0.0	60.0	7.541e+04	-3055.92	-19.99	6013.10	2257.64	5.497e+05
34	77	7.211e+05	1675.12	0.07	-420.00	0.0	7.529e+04	-2632.38	-11.92	7070.19	1675.12	7.211e+05
		5.508e+05	948.90	1.21e-04	0.0	60.0	7.529e+04	-3052.38	-11.92	7070.19	948.90	5.508e+05

Trave	Cmb	M3 mx/mn	M2 mx/mn	D 2 / D 3	Q 2 / Q 3	Pos.	N	V 2	V 3	T	M 2	M 3
34	80	7.201e+05	2422.84	0.07	-420.00	0.0	7.539e+04	-2630.01	-15.78	6614.21	2422.84	7.201e+05
		5.495e+05	1486.76	1.49e-04	0.0	60.0	7.539e+04	-3050.01	-15.78	6614.21	1486.76	5.495e+05
34	85	7.206e+05	2048.98	0.07	-420.00	0.0	7.534e+04	-2631.19	-13.85	6842.20	2048.98	7.206e+05
		5.501e+05	1217.83	1.35e-04	0.0	60.0	7.534e+04	-3051.19	-13.85	6842.20	1217.83	5.501e+05
34	87	1.557e+06	7079.85	0.17	-420.00	0.0	1.652e+05	-7615.85	-29.84	5.115e+04	7079.85	1.557e+06
		1.087e+06	5289.70	3.14e-04	0.0	60.0	1.652e+05	-8035.85	-29.84	5.115e+04	5289.70	1.087e+06
34	88	6.861e+05	1951.90	0.07	-420.00	0.0	7.174e+04	-2495.27	-13.21	6500.74	1951.90	6.861e+05
		5.238e+05	1159.17	1.29e-04	0.0	60.0	7.174e+04	-2915.27	-13.21	6500.74	1159.17	5.238e+05
34	97	1.500e+06	6651.50	0.17	-420.00	0.0	1.590e+05	-7222.24	-28.73	4.698e+04	6651.50	1.500e+06
		1.054e+06	4927.60	3.01e-04	0.0	60.0	1.590e+05	-7642.24	-28.73	4.698e+04	4927.60	1.054e+06
34	98	7.181e+05	2041.96	0.07	-420.00	0.0	7.508e+04	-2621.48	-13.81	6817.96	2041.96	7.181e+05
		5.482e+05	1213.55	1.35e-04	0.0	60.0	7.508e+04	-3041.48	-13.81	6817.96	1213.55	5.482e+05
34	102	7.206e+05	2048.98	0.07	-420.00	0.0	7.534e+04	-2631.19	-13.85	6842.20	2048.98	7.206e+05
		5.501e+05	1217.83	1.35e-04	0.0	60.0	7.534e+04	-3051.19	-13.85	6842.20	1217.83	5.501e+05
35	1	8.286e+05	1508.04	0.11	-546.00	0.0	8.699e+04	-4255.15	-37.32	1.111e+04	1508.04	8.286e+05
		5.569e+05	-731.38	2.06e-04	0.0	60.0	8.699e+04	-4801.15	-37.32	1.111e+04	-731.38	5.569e+05
35	2	1.956e+06	7690.99	0.30	-546.00	0.0	2.141e+05	-1.256e+04	-109.49	7.558e+04	7690.99	1.956e+06
		1.186e+06	1121.48	5.22e-04	0.0	60.0	2.141e+05	-1.310e+04	-109.49	7.558e+04	1121.48	1.186e+06
35	7	6.210e+05	1129.85	0.08	-420.00	0.0	6.520e+04	-3183.81	-27.98	8317.34	1129.85	6.210e+05
		4.174e+05	-549.19	1.54e-04	0.0	60.0	6.520e+04	-3603.81	-27.98	8317.34	-549.19	4.174e+05
35	30	6.693e+05	-1531.93	0.09	-420.00	0.0	7.011e+04	-3432.93	-11.97	1.125e+04	-1531.93	6.693e+05
		4.502e+05	-2407.30	2.59e-05	0.0	60.0	7.011e+04	-3852.93	-11.97	1.125e+04	-2407.30	4.502e+05
35	31	6.689e+05	3967.59	0.09	-420.00	0.0	7.034e+04	-3459.44	-48.26	6720.43	3967.59	6.689e+05
		4.492e+05	1228.95	3.06e-04	0.0	60.0	7.034e+04	-3879.44	-48.26	6720.43	1228.95	4.492e+05
35	33	6.701e+05	-1530.17	0.09	-420.00	0.0	7.006e+04	-3434.45	-11.96	1.125e+04	-1530.17	6.701e+05
		4.512e+05	-2405.48	2.40e-05	0.0	60.0	7.006e+04	-3854.45	-11.96	1.125e+04	-2405.48	4.512e+05
35	36	6.681e+05	3965.83	0.09	-420.00	0.0	7.040e+04	-3457.92	-48.27	6720.42	3965.83	6.681e+05
		4.483e+05	1227.13	3.08e-04	0.0	60.0	7.040e+04	-3877.92	-48.27	6720.42	1227.13	4.483e+05
35	49	6.706e+05	349.71	0.09	-420.00	0.0	7.009e+04	-3444.97	-24.65	9652.25	349.71	6.706e+05
		4.515e+05	-1178.92	1.18e-04	0.0	60.0	7.009e+04	-3864.97	-24.65	9652.25	-1178.92	4.515e+05
35	52	6.676e+05	2085.95	0.09	-420.00	0.0	7.037e+04	-3447.40	-35.58	8316.27	2085.95	6.676e+05
		4.479e+05	0.57	2.15e-04	0.0	60.0	7.037e+04	-3867.40	-35.58	8316.27	0.57	4.479e+05
35	62	6.692e+05	177.34	0.09	-420.00	0.0	7.019e+04	-3441.19	-23.26	9854.34	177.34	6.692e+05
		4.499e+05	-1277.15	1.13e-04	0.0	60.0	7.019e+04	-3861.19	-23.26	9854.34	-1277.15	4.499e+05
35	63	6.690e+05	2258.32	0.09	-420.00	0.0	7.027e+04	-3451.18	-36.97	8114.18	2258.32	6.690e+05
		4.495e+05	98.80	2.19e-04	0.0	60.0	7.027e+04	-3871.18	-36.97	8114.18	98.80	4.495e+05
35	65	6.695e+05	178.02	0.09	-420.00	0.0	7.016e+04	-3441.77	-23.25	9854.34	178.02	6.695e+05
		4.503e+05	-1276.45	1.12e-04	0.0	60.0	7.016e+04	-3861.77	-23.25	9854.34	-1276.45	4.503e+05
35	68	6.687e+05	2257.64	0.09	-420.00	0.0	7.029e+04	-3450.60	-36.98	8114.18	2257.64	6.687e+05
		4.492e+05	98.10	2.20e-04	0.0	60.0	7.029e+04	-3870.60	-36.98	8114.18	98.10	4.492e+05
35	81	6.697e+05	889.23	0.09	-420.00	0.0	7.018e+04	-3445.74	-28.05	9241.05	889.23	6.697e+05
		4.504e+05	-812.44	1.48e-04	0.0	60.0	7.018e+04	-3865.74	-28.05	9241.05	-812.44	4.504e+05
35	84	6.685e+05	1546.43	0.09	-420.00	0.0	7.028e+04	-3446.63	-32.18	8727.48	1546.43	6.685e+05
		4.490e+05	-365.91	1.85e-04	0.0	60.0	7.028e+04	-3866.63	-32.18	8727.48	-365.91	4.490e+05
35	85	6.691e+05	1217.83	0.09	-420.00	0.0	7.023e+04	-3446.19	-30.12	8984.26	1217.83	6.691e+05
		4.497e+05	-589.18	1.66e-04	0.0	60.0	7.023e+04	-3866.19	-30.12	8984.26	-589.18	4.497e+05
35	86	6.416e+05	1167.74	0.08	-420.00	0.0	6.736e+04	-3296.26	-28.90	8602.78	1167.74	6.416e+05
		4.313e+05	-566.15	1.59e-04	0.0	60.0	6.736e+04	-3716.26	-28.90	8602.78	-566.15	4.313e+05
35	87	1.393e+06	5289.70	0.21	-420.00	0.0	1.521e+05	-8830.07	-77.01	5.158e+04	5289.70	1.393e+06
		8.507e+05	669.10	3.70e-04	0.0	60.0	1.521e+05	-9250.07	-77.01	5.158e+04	669.10	8.507e+05
35	88	6.371e+05	1159.17	0.08	-420.00	0.0	6.688e+04	-3271.27	-28.69	8539.65	1159.17	6.371e+05
		4.282e+05	-562.52	1.58e-04	0.0	60.0	6.688e+04	-3691.27	-28.69	8539.65	-562.52	4.282e+05
35	96	6.691e+05	1217.83	0.09	-420.00	0.0	7.023e+04	-3446.19	-30.12	8984.26	1217.83	6.691e+05
		4.497e+05	-589.18	1.66e-04	0.0	60.0	7.023e+04	-3866.19	-30.12	8984.26	-589.18	4.497e+05
35	97	1.345e+06	4927.60	0.20	-420.00	0.0	1.465e+05	-8426.62	-73.42	4.767e+04	4927.60	1.345e+06
		8.272e+05	522.54	3.56e-04	0.0	60.0	1.465e+05	-8846.62	-73.42	4.767e+04	522.54	8.272e+05
35	98	6.668e+05	1213.55	0.09	-420.00	0.0	6.999e+04	-3433.69	-30.02	8952.70	1213.55	6.668e+05
		4.482e+05	-587.36	1.66e-04	0.0	60.0	6.999e+04	-3853.69	-30.02	8952.70	-587.36	4.482e+05
35	102	6.691e+05	1217.83	0.09	-420.00	0.0	7.023e+04	-3446.19	-30.12	8984.26	1217.83	6.691e+05
		4.497e+05	-589.18	1.66e-04	0.0	60.0	7.023e+04	-3866.19	-30.12	8984.26	-589.18	4.497e+05
36	2	1.682e+06	1121.48	0.34	-546.00	0.0	1.928e+05	-1.421e+04	-191.13	7.568e+04	1121.48	1.682e+06
		8.124e+05	-1.035e+04	5.40e-04	0.0	60.0	1.928e+05	-1.476e+04	-191.13	7.568e+04	-1.035e+04	8.124e+05
36	7	5.555e+05	-549.19	0.09	-420.00	0.0	5.927e+04	-3943.78	-48.63	1.029e+04	-549.19	5.555e+05
		3.063e+05	-3467.07	1.68e-04	0.0	60.0	5.927e+04	-4363.78	-48.63	1.029e+04	-3467.07	3.063e+05
36	20	1.496e+06	1304.94	0.30	-420.00	0.0	1.730e+05	-1.289e+04	-174.89	7.223e+04	1304.94	1.496e+06
		7.100e+05	-9188.33	4.84e-04	0.0	60.0	1.730e+05	-1.331e+04	-174.89	7.223e+04	-9188.33	7.100e+05
36	30	5.969e+05	-2407.30	0.10	-420.00	0.0	6.374e+04	-4256.11	-34.36	1.331e+04	-2407.30	5.969e+05
		3.308e+05	-4782.54	2.28e-05	0.0	60.0	6.374e+04	-4676.11	-34.36	1.331e+04	-4782.54	3.308e+05
36	31	6.001e+05	1228.95	0.10	-420.00	0.0	6.394e+04	-4273.68	-70.36	8911.81	1228.95	6.001e+05
		3.292e+05	-2679.40	3.40e-04	0.0	60.0	6.394e+04	-4693.68	-70.36	8911.81	-2679.40	3.292e+05
36	33	5.978e+05	-2405.48	0.10	-420.00	0.0	6.368e+04	-4257.66	-34.31	1.331e+04	-2405.48	5.978e+05
		3.317e+05	-4780.84	2.29e-05	0.0	60.0	6.368e+04	-4677.66	-34.31	1.331e+04	-4780.84	3.317e+05
36	36	5.991e+05	1227.13	0.10	-420.00	0.0	6.399e+04	-4272.14	-70.41	8911.88	1227.13	5.991e+05
		3.283e+05	-2681.09	3.40e-04	0.0	60.0	6.399e+04	-4692.14	-70.41	8911.88	-2681.09	3.283e+05
36	51	6.003e+05	-98.01	0.10	-420.00	0.0	6.378e+04	-4269.89	-57.69	1.044e+04	-98.01	6.003e+05

Trave	Cmb	M3 mx/mn	M2 mx/mn	D 2 / D 3	Q 2 / Q 3	Pos.	N	V 2	V 3	T	M 2	M 3
		3.310e+05	-3464.72	2.29e-04	0.0	60.0	6.378e+04	-4689.89	-57.69	1.044e+04	-3464.72	3.310e+05
36	52	5.973e+05	0.57	0.10	-420.00	0.0	6.397e+04	-4264.72	-57.85	1.046e+04	0.57	5.973e+05
		3.283e+05	-3375.34	2.29e-04	0.0	60.0	6.397e+04	-4684.72	-57.85	1.046e+04	-3375.34	3.283e+05
36	62	5.979e+05	-1277.15	0.10	-420.00	0.0	6.380e+04	-4261.58	-45.56	1.196e+04	-1277.15	5.979e+05
		3.303e+05	-4128.25	1.21e-04	0.0	60.0	6.380e+04	-4681.58	-45.56	1.196e+04	-4128.25	3.303e+05
36	63	5.991e+05	98.80	0.10	-420.00	0.0	6.388e+04	-4268.22	-59.17	1.026e+04	98.80	5.991e+05
		3.297e+05	-3333.69	2.41e-04	0.0	60.0	6.388e+04	-4688.22	-59.17	1.026e+04	-3333.69	3.297e+05
36	65	5.982e+05	-1276.45	0.10	-420.00	0.0	6.378e+04	-4262.17	-45.54	1.196e+04	-1276.45	5.982e+05
		3.306e+05	-4127.60	1.21e-04	0.0	60.0	6.378e+04	-4682.17	-45.54	1.196e+04	-4127.60	3.306e+05
36	68	5.987e+05	98.10	0.10	-420.00	0.0	6.390e+04	-4267.63	-59.19	1.026e+04	98.10	5.987e+05
		3.294e+05	-3334.34	2.41e-04	0.0	60.0	6.390e+04	-4687.63	-59.19	1.026e+04	-3334.34	3.294e+05
36	83	5.992e+05	-403.45	0.10	-420.00	0.0	6.382e+04	-4266.80	-54.38	1.085e+04	-403.45	5.992e+05
		3.304e+05	-3630.53	1.99e-04	0.0	60.0	6.382e+04	-4686.80	-54.38	1.085e+04	-3630.53	3.304e+05
36	84	5.980e+05	-365.91	0.10	-420.00	0.0	6.389e+04	-4264.82	-54.44	1.086e+04	-365.91	5.980e+05
		3.293e+05	-3596.49	1.99e-04	0.0	60.0	6.389e+04	-4684.82	-54.44	1.086e+04	-3596.49	3.293e+05
36	85	5.985e+05	-589.18	0.10	-420.00	0.0	6.384e+04	-4264.90	-52.36	1.111e+04	-589.18	5.985e+05
		3.300e+05	-3730.97	1.81e-04	0.0	60.0	6.384e+04	-4684.90	-52.36	1.111e+04	-3730.97	3.300e+05
36	87	1.201e+06	669.10	0.24	-420.00	0.0	1.370e+05	-1.004e+04	-134.40	5.194e+04	669.10	1.201e+06
		5.856e+05	-7394.86	3.84e-04	0.0	60.0	1.370e+05	-1.046e+04	-134.40	5.194e+04	-7394.86	5.856e+05
36	88	5.698e+05	-562.52	0.10	-420.00	0.0	6.079e+04	-4050.82	-49.88	1.056e+04	-562.52	5.698e+05
		3.142e+05	-3555.04	1.73e-04	0.0	60.0	6.079e+04	-4470.82	-49.88	1.056e+04	-3555.04	3.142e+05
36	95	1.197e+06	673.57	0.24	-420.00	0.0	1.366e+05	-1.001e+04	-134.05	5.186e+04	673.57	1.197e+06
		5.833e+05	-7369.21	3.83e-04	0.0	60.0	1.366e+05	-1.043e+04	-134.05	5.186e+04	-7369.21	5.833e+05
36	97	1.163e+06	522.54	0.23	-420.00	0.0	1.321e+05	-9632.08	-128.11	4.827e+04	522.54	1.163e+06
		5.722e+05	-7164.32	3.71e-04	0.0	60.0	1.321e+05	-1.005e+04	-128.11	4.827e+04	-7164.32	5.722e+05
36	98	5.964e+05	-587.36	0.10	-420.00	0.0	6.362e+04	-4249.61	-52.19	1.107e+04	-587.36	5.964e+05
		3.289e+05	-3718.47	1.81e-04	0.0	60.0	6.362e+04	-4669.61	-52.19	1.107e+04	-3718.47	3.289e+05
36	102	5.985e+05	-589.18	0.10	-420.00	0.0	6.384e+04	-4264.90	-52.36	1.111e+04	-589.18	5.985e+05
		3.300e+05	-3730.97	1.81e-04	0.0	60.0	6.384e+04	-4684.90	-52.36	1.111e+04	-3730.97	3.300e+05
37	2	1.367e+06	-1.035e+04	0.37	-546.00	0.0	1.690e+05	-1.587e+04	-247.34	7.453e+04	-1.035e+04	1.367e+06
		3.982e+05	-2.519e+04	4.41e-04	0.0	60.0	1.690e+05	-1.642e+04	-247.34	7.453e+04	-2.519e+04	3.982e+05
37	7	4.717e+05	-3467.07	0.11	-420.00	0.0	5.216e+04	-4706.94	-63.09	1.181e+04	-3467.07	4.717e+05
		1.767e+05	-7252.69	1.51e-04	0.0	60.0	5.216e+04	-5126.94	-63.09	1.181e+04	-7252.69	1.767e+05
37	19	4.717e+05	-3466.08	0.11	-420.00	0.0	5.216e+04	-4706.96	-63.10	1.181e+04	-3466.08	4.717e+05
		1.767e+05	-7252.31	1.51e-04	0.0	60.0	5.216e+04	-5126.96	-63.10	1.181e+04	-7252.31	1.767e+05
37	22	5.061e+05	-4558.34	0.11	-420.00	0.0	5.630e+04	-5078.59	-54.00	1.493e+04	-4558.34	5.061e+05
		1.887e+05	-8884.57	8.96e-06	0.0	60.0	5.630e+04	-5498.59	-54.00	1.493e+04	-8884.57	1.887e+05
37	31	5.104e+05	-2679.40	0.11	-420.00	0.0	5.605e+04	-5096.07	-83.17	1.057e+04	-2679.40	5.104e+05
		1.921e+05	-6938.07	3.32e-04	0.0	60.0	5.605e+04	-5516.07	-83.17	1.057e+04	-6938.07	1.921e+05
37	34	5.060e+05	-4754.03	0.11	-420.00	0.0	5.631e+04	-5077.88	-52.65	1.492e+04	-4754.03	5.060e+05
		1.886e+05	-8671.95	-5.97e-06	0.0	60.0	5.631e+04	-5497.88	-52.65	1.492e+04	-8671.95	1.886e+05
37	35	5.104e+05	-2707.90	0.11	-420.00	0.0	5.605e+04	-5096.08	-83.17	1.057e+04	-2707.90	5.104e+05
		1.921e+05	-6939.49	3.32e-04	0.0	60.0	5.605e+04	-5516.08	-83.17	1.057e+04	-6939.49	1.921e+05
37	54	5.074e+05	-4043.72	0.11	-420.00	0.0	5.623e+04	-5083.77	-62.65	1.360e+04	-4043.72	5.074e+05
		1.898e+05	-8212.83	1.02e-04	0.0	60.0	5.623e+04	-5503.77	-62.65	1.360e+04	-8212.83	1.898e+05
37	63	5.090e+05	-3333.68	0.11	-420.00	0.0	5.613e+04	-5090.46	-73.69	1.190e+04	-3333.68	5.090e+05
		1.911e+05	-7478.90	2.27e-04	0.0	60.0	5.613e+04	-5510.46	-73.69	1.190e+04	-7478.90	1.911e+05
37	66	5.074e+05	-4117.39	0.11	-420.00	0.0	5.623e+04	-5083.50	-62.14	1.359e+04	-4117.39	5.074e+05
		1.897e+05	-8131.99	9.91e-05	0.0	60.0	5.623e+04	-5503.50	-62.14	1.359e+04	-8131.99	1.897e+05
37	67	5.090e+05	-3344.54	0.11	-420.00	0.0	5.613e+04	-5090.46	-73.69	1.190e+04	-3344.54	5.090e+05
		1.911e+05	-7479.45	2.27e-04	0.0	60.0	5.613e+04	-5510.46	-73.69	1.190e+04	-7479.45	1.911e+05
37	85	5.082e+05	-3730.97	0.11	-420.00	0.0	5.618e+04	-5086.98	-67.91	1.275e+04	-3730.97	5.082e+05
		1.904e+05	-7805.72	1.63e-04	0.0	60.0	5.618e+04	-5506.98	-67.91	1.275e+04	-7805.72	1.904e+05
37	87	9.789e+05	-7394.86	0.26	-420.00	0.0	1.201e+05	-1.126e+04	-173.95	5.139e+04	-7394.86	9.789e+05
		2.908e+05	-1.783e+04	3.16e-04	0.0	60.0	1.201e+05	-1.168e+04	-173.95	5.139e+04	-1.783e+04	2.908e+05
37	88	4.839e+05	-3555.04	0.11	-420.00	0.0	5.350e+04	-4833.62	-64.70	1.212e+04	-3555.04	4.839e+05
		1.813e+05	-7437.03	1.55e-04	0.0	60.0	5.350e+04	-5253.62	-64.70	1.212e+04	-7437.03	1.813e+05
37	94	4.839e+05	-3554.38	0.11	-420.00	0.0	5.350e+04	-4833.64	-64.71	1.212e+04	-3554.38	4.839e+05
		1.813e+05	-7436.78	1.55e-04	0.0	60.0	5.350e+04	-5253.64	-64.71	1.212e+04	-7436.78	1.813e+05
37	97	9.506e+05	-7164.32	0.25	-420.00	0.0	1.158e+05	-1.084e+04	-165.82	4.800e+04	-7164.32	9.506e+05
		2.878e+05	-1.711e+04	3.06e-04	0.0	60.0	1.158e+05	-1.126e+04	-165.82	4.800e+04	-1.711e+04	2.878e+05
37	98	5.065e+05	-3718.47	0.11	-420.00	0.0	5.599e+04	-5068.88	-67.68	1.270e+04	-3718.47	5.065e+05
		1.897e+05	-7779.41	1.62e-04	0.0	60.0	5.599e+04	-5488.88	-67.68	1.270e+04	-7779.41	1.897e+05
37	101	5.065e+05	-3718.14	0.11	-420.00	0.0	5.599e+04	-5068.89	-67.69	1.270e+04	-3718.14	5.065e+05
		1.897e+05	-7779.28	1.62e-04	0.0	60.0	5.599e+04	-5488.89	-67.69	1.270e+04	-7779.28	1.897e+05
37	102	5.082e+05	-3730.97	0.11	-420.00	0.0	5.618e+04	-5086.98	-67.91	1.275e+04	-3730.97	5.082e+05
		1.904e+05	-7805.72	1.63e-04	0.0	60.0	5.618e+04	-5506.98	-67.91	1.275e+04	-7805.72	1.904e+05
38	2	1.001e+06	-2.519e+04	0.39	-546.00	0.0	1.430e+05	-1.747e+04	-165.21	6.805e+04	-2.519e+04	1.001e+06
		-6.359e+04	-3.510e+04	1.48e-04	0.0	60.0	1.430e+05	-1.802e+04	-165.21	6.805e+04	-3.510e+04	-6.359e+04
38	8	8.786e+05	-2.277e+04	0.35	-420.00	0.0	1.283e+05	-1.564e+04	-152.00	6.411e+04	-2.277e+04	8.786e+05
		-7.250e+04	-3.189e+04	1.21e-04	0.0	60.0	1.283e+05	-1.606e+04	-152.00	6.411e+04	-3.189e+04	-7.250e+04
38	15	3.668e+05	-7252.69	0.11	-420.00	0.0	4.399e+04	-5460.88	-39.72	1.178e+04	-7252.69	3.668e+05
		2.654e+04	-9636.18	8.30e-05	0.0	60.0	4.399e+04	-5880.88	-39.72	1.178e+04	-9636.18	2.654e+04
38	19	3.668e+05	-7252.31	0.11	-420.00	0.0	4.399e+04	-5460.90	-39.74	1.177e+04	-7252.31	3.668e+05
		2.654e+04	-9636.65	8.30e-05	0.0	60.0	4.399e+04	-5880.90	-39.74	1.177e+04	-9636.65	2.654e+04

Trave	Cmb	M3 mx/mn	M2 mx/mn	D 2 / D 3	Q 2 / Q 3	Pos.	N	V 2	V 3	T	M 2	M 3
38	23	3.977e+05	-6726.87	0.12	-420.00	0.0	4.728e+04	-5914.77	-51.72	1.042e+04	-6726.87	3.977e+05
		3.033e+04	-1.165e+04	2.48e-04	0.0	60.0	4.728e+04	-6334.77	-51.72	1.042e+04	-1.165e+04	3.033e+04
38	24	3.969e+05	-6750.38	0.12	-420.00	0.0	4.732e+04	-5907.80	-51.89	1.045e+04	-6750.38	3.969e+05
		2.992e+04	-1.167e+04	2.48e-04	0.0	60.0	4.732e+04	-6327.80	-51.89	1.045e+04	-1.167e+04	2.992e+04
38	34	3.925e+05	-8671.95	0.12	-420.00	0.0	4.747e+04	-5881.75	-31.91	1.496e+04	-8671.95	3.925e+05
		2.694e+04	-1.139e+04	-8.24e-05	0.0	60.0	4.747e+04	-6301.75	-31.91	1.496e+04	-1.139e+04	2.694e+04
38	35	3.979e+05	-6939.49	0.12	-420.00	0.0	4.727e+04	-5916.11	-53.34	1.043e+04	-6939.49	3.979e+05
		3.038e+04	-9331.94	2.61e-04	0.0	60.0	4.727e+04	-6336.11	-53.34	1.043e+04	-9331.94	3.038e+04
38	55	3.962e+05	-7398.60	0.12	-420.00	0.0	4.733e+04	-5904.97	-46.08	1.181e+04	-7398.60	3.962e+05
		2.929e+04	-1.085e+04	1.49e-04	0.0	60.0	4.733e+04	-6324.97	-46.08	1.181e+04	-1.085e+04	2.929e+04
38	56	3.958e+05	-7407.57	0.12	-420.00	0.0	4.735e+04	-5902.29	-46.15	1.182e+04	-7407.57	3.958e+05
		2.914e+04	-1.086e+04	1.49e-04	0.0	60.0	4.735e+04	-6322.29	-46.15	1.182e+04	-1.086e+04	2.914e+04
38	66	3.942e+05	-8131.99	0.12	-420.00	0.0	4.741e+04	-5892.39	-38.55	1.358e+04	-8131.99	3.942e+05
		2.801e+04	-1.075e+04	2.65e-05	0.0	60.0	4.741e+04	-6312.39	-38.55	1.358e+04	-1.075e+04	2.801e+04
38	67	3.962e+05	-7479.45	0.12	-420.00	0.0	4.733e+04	-5905.47	-46.69	1.181e+04	-7479.45	3.962e+05
		2.931e+04	-9973.58	1.54e-04	0.0	60.0	4.733e+04	-6325.47	-46.69	1.181e+04	-9973.58	2.931e+04
38	85	3.952e+05	-7805.72	0.12	-420.00	0.0	4.737e+04	-5898.93	-42.62	1.270e+04	-7805.72	3.952e+05
		2.866e+04	-1.036e+04	8.93e-05	0.0	60.0	4.737e+04	-6318.93	-42.62	1.270e+04	-1.036e+04	2.866e+04
38	87	7.202e+05	-1.783e+04	0.27	-420.00	0.0	1.016e+05	-1.244e+04	-115.82	4.706e+04	-1.783e+04	7.202e+05
		-3.857e+04	-2.478e+04	1.11e-04	0.0	60.0	1.016e+05	-1.286e+04	-115.82	4.706e+04	-2.478e+04	-3.857e+04
38	88	3.763e+05	-7437.03	0.12	-420.00	0.0	4.511e+04	-5606.90	-40.69	1.208e+04	-7437.03	3.763e+05
		2.725e+04	-9878.50	8.51e-05	0.0	60.0	4.511e+04	-6026.90	-40.69	1.208e+04	-9878.50	2.725e+04
38	89	7.175e+05	-1.778e+04	0.27	-420.00	0.0	1.013e+05	-1.239e+04	-115.54	4.697e+04	-1.778e+04	7.175e+05
		-3.878e+04	-2.471e+04	1.10e-04	0.0	60.0	1.013e+05	-1.281e+04	-115.54	4.697e+04	-2.471e+04	-3.878e+04
38	94	3.763e+05	-7436.78	0.12	-420.00	0.0	4.511e+04	-5606.91	-40.70	1.208e+04	-7436.78	3.763e+05
		2.725e+04	-9878.81	8.51e-05	0.0	60.0	4.511e+04	-6026.91	-40.70	1.208e+04	-9878.81	2.725e+04
38	97	7.023e+05	-1.711e+04	0.26	-420.00	0.0	9.796e+04	-1.201e+04	-109.99	4.410e+04	-1.711e+04	7.023e+05
		-3.076e+04	-2.371e+04	1.12e-04	0.0	60.0	9.796e+04	-1.243e+04	-109.99	4.410e+04	-2.371e+04	-3.076e+04
38	98	3.938e+05	-7779.41	0.12	-420.00	0.0	4.721e+04	-5878.07	-42.48	1.265e+04	-7779.41	3.938e+05
		2.856e+04	-1.033e+04	8.90e-05	0.0	60.0	4.721e+04	-6298.07	-42.48	1.265e+04	-1.033e+04	2.856e+04
38	101	3.938e+05	-7779.28	0.12	-420.00	0.0	4.721e+04	-5878.07	-42.49	1.265e+04	-7779.28	3.938e+05
		2.856e+04	-1.033e+04	8.90e-05	0.0	60.0	4.721e+04	-6298.07	-42.49	1.265e+04	-1.033e+04	2.856e+04
38	102	3.952e+05	-7805.72	0.12	-420.00	0.0	4.737e+04	-5898.93	-42.62	1.270e+04	-7805.72	3.952e+05
		2.866e+04	-1.036e+04	8.93e-05	0.0	60.0	4.737e+04	-6318.93	-42.62	1.270e+04	-1.036e+04	2.866e+04
39	2	5.294e+05	-2.405e+04	0.39	-546.00	0.0	1.173e+05	-1.852e+04	184.17	5.004e+04	-3.510e+04	5.294e+05
		-5.982e+05	-3.510e+04	-3.58e-04	0.0	60.0	1.173e+05	-1.907e+04	184.17	5.004e+04	-2.405e+04	-5.982e+05
39	7	2.253e+05	-6218.57	0.12	-420.00	0.0	3.540e+04	-6067.35	56.96	8645.90	-9636.19	2.253e+05
		-1.514e+05	-9636.19	-4.03e-05	0.0	60.0	3.540e+04	-6487.35	56.96	8645.90	-6218.57	-1.514e+05
39	19	2.253e+05	-6219.62	0.12	-420.00	0.0	3.540e+04	-6067.36	56.95	8643.44	-9636.65	2.253e+05
		-1.514e+05	-9636.65	-4.03e-05	0.0	60.0	3.540e+04	-6487.36	56.95	8643.44	-6219.62	-1.514e+05
39	24	2.449e+05	-7785.05	0.13	-420.00	0.0	3.806e+04	-6571.43	52.10	7037.59	-1.167e+04	2.449e+05
		-1.618e+05	-1.167e+04	1.08e-04	0.0	60.0	3.806e+04	-6991.43	52.10	7037.59	-7785.05	-1.618e+05
39	25	2.405e+05	-5544.62	0.13	-420.00	0.0	3.818e+04	-6531.72	71.18	1.162e+04	-9059.31	2.405e+05
		-1.641e+05	-9059.31	-1.95e-04	0.0	60.0	3.818e+04	-6951.72	71.18	1.162e+04	-5544.62	-1.641e+05
39	26	2.399e+05	-5555.67	0.13	-420.00	0.0	3.820e+04	-6522.75	71.39	1.159e+04	-9071.71	2.399e+05
		-1.643e+05	-9071.71	-1.96e-04	0.0	60.0	3.820e+04	-6942.75	71.39	1.159e+04	-5555.67	-1.643e+05
39	27	2.456e+05	-7774.05	0.13	-420.00	0.0	3.803e+04	-6580.38	51.89	7037.96	-1.165e+04	2.456e+05
		-1.617e+05	-1.165e+04	1.09e-04	0.0	60.0	3.803e+04	-7000.38	51.89	7037.96	-7774.05	-1.617e+05
39	35	2.457e+05	-5719.37	0.13	-420.00	0.0	3.804e+04	-6582.87	52.13	6978.36	-9331.94	2.457e+05
		-1.617e+05	-9331.94	1.24e-04	0.0	60.0	3.804e+04	-7002.87	52.13	6978.36	-5719.37	-1.617e+05
39	56	2.436e+05	-7091.17	0.13	-420.00	0.0	3.809e+04	-6559.07	57.99	8429.15	-1.086e+04	2.436e+05
		-1.625e+05	-1.086e+04	1.80e-05	0.0	60.0	3.809e+04	-6979.07	57.99	8429.15	-7091.17	-1.625e+05
39	57	2.419e+05	-6238.54	0.13	-420.00	0.0	3.814e+04	-6544.08	65.28	1.021e+04	-9870.37	2.419e+05
		-1.634e+05	-9870.37	-1.01e-04	0.0	60.0	3.814e+04	-6964.08	65.28	1.021e+04	-6238.54	-1.634e+05
39	58	2.416e+05	-6242.77	0.13	-420.00	0.0	3.815e+04	-6540.63	65.36	1.020e+04	-9875.11	2.416e+05
		-1.635e+05	-9875.11	-1.01e-04	0.0	60.0	3.815e+04	-6960.63	65.36	1.020e+04	-6242.77	-1.635e+05
39	59	2.438e+05	-7086.95	0.13	-420.00	0.0	3.808e+04	-6562.50	57.91	8429.30	-1.085e+04	2.438e+05
		-1.625e+05	-1.085e+04	1.81e-05	0.0	60.0	3.808e+04	-6982.50	57.91	8429.30	-7086.95	-1.625e+05
39	67	2.439e+05	-6304.06	0.13	-420.00	0.0	3.809e+04	-6563.44	58.01	8407.33	-9973.58	2.439e+05
		-1.625e+05	-9973.58	2.17e-05	0.0	60.0	3.809e+04	-6983.44	58.01	8407.33	-6304.06	-1.625e+05
39	85	2.427e+05	-6664.86	0.13	-420.00	0.0	3.812e+04	-6551.57	61.64	9312.80	-1.036e+04	2.427e+05
		-1.630e+05	-1.036e+04	-4.36e-05	0.0	60.0	3.812e+04	-6971.57	61.64	9312.80	-6664.86	-1.630e+05
39	87	3.853e+05	-1.692e+04	0.28	-420.00	0.0	8.329e+04	-1.322e+04	131.00	3.460e+04	-2.478e+04	3.853e+05
		-4.205e+05	-2.478e+04	-2.44e-04	0.0	60.0	8.329e+04	-1.364e+04	131.00	3.460e+04	-1.692e+04	-4.205e+05
39	88	2.311e+05	-6367.33	0.12	-420.00	0.0	3.630e+04	-6228.76	58.52	8868.20	-9878.50	2.311e+05
		-1.552e+05	-9878.50	-4.14e-05	0.0	60.0	3.630e+04	-6648.76	58.52	8868.20	-6367.33	-1.552e+05
39	94	2.311e+05	-6368.03	0.12	-420.00	0.0	3.630e+04	-6228.76	58.51	8866.56	-9878.81	2.311e+05
		-1.552e+05	-9878.81	-4.14e-05	0.0	60.0	3.630e+04	-6648.76	58.51	8866.56	-6368.03	-1.552e+05
39	97	3.800e+05	-1.612e+04	0.27	-420.00	0.0	8.017e+04	-1.280e+04	126.47	3.242e+04	-2.371e+04	3.800e+05
		-4.007e+05	-2.371e+04	-2.26e-04	0.0	60.0	8.017e+04	-1.322e+04	126.47	3.242e+04	-1.612e+04	-4.007e+05
39	98	2.419e+05	-6643.53	0.13	-420.00	0.0	3.799e+04	-6528.51	61.42	9281.22	-1.033e+04	2.419e+05
		-1.624e+05	-1.033e+04	-4.34e-05	0.0	60.0	3.799e+04	-6948.51	61.42	9281.22	-6643.53	-1.624e+05
39	101	2.419e+05	-6643.88	0.13	-420.00	0.0	3.799e+04	-6528.51	61.41	9280.40	-1.033e+04	2.419e+05
		-1.624e+05	-1.033e+04	-4.34e-05	0.0	60.0	3.799e+04	-6948.51	61.41	9280.40	-6643.88	-1.624e+05
39	102	2.427e+05	-6664.86	0.13	-420.00	0.0	3.812e+04	-6551.57	61.64	9312.80	-1.036e+04	2.427e+05

Trave	Cmb	M3 mx/mn	M2 mx/mn	D 2 / D 3	Q 2 / Q 3	Pos.	N	V 2	V 3	T	M 2	M 3
		-1.630e+05	-1.036e+04	-4.36e-05	0.0	60.0	3.812e+04	-6971.57	61.64	9312.80	-6664.86	-1.630e+05
40	2	-2.879e+05	0.01	0.38	-546.00	0.0	1.042e+05	-2.277e+04	400.81	2.322e+04	-2.405e+04	-2.879e+05
		-1.670e+06	-2.405e+04	-8.29e-04	0.0	60.0	1.042e+05	-2.331e+04	400.81	2.322e+04	0.01	-1.670e+06
40	19	-1.929e+04	2.31e-03	0.11	-420.00	0.0	2.980e+04	-7566.39	103.66	3824.47	-6219.62	-1.929e+04
		-4.859e+05	-6219.62	-1.43e-04	0.0	60.0	2.980e+04	-7986.39	103.66	3824.47	2.31e-03	-4.859e+05
40	26	-2.273e+04	3.57e-03	0.12	-420.00	0.0	3.219e+04	-8149.35	92.59	5742.87	-5555.68	-2.273e+04
		-5.242e+05	-5555.68	-2.89e-04	0.0	60.0	3.219e+04	-8569.35	92.59	5742.87	3.57e-03	-5.242e+05
40	27	-1.871e+04	1.41e-03	0.12	-420.00	0.0	3.199e+04	-8180.27	129.57	2517.38	-7774.05	-1.871e+04
		-5.222e+05	-7774.05	-1.82e-05	0.0	60.0	3.199e+04	-8600.27	129.57	2517.38	1.41e-03	-5.222e+05
40	28	-1.912e+04	1.41e-03	0.12	-420.00	0.0	3.200e+04	-8189.17	129.75	2488.80	-7785.10	-1.912e+04
		-5.223e+05	-7785.10	-1.89e-05	0.0	60.0	3.200e+04	-8609.17	129.75	2488.80	1.41e-03	-5.223e+05
40	30	-2.282e+04	3.70e-03	0.12	-420.00	0.0	3.218e+04	-8146.82	126.84	5778.84	-7610.31	-2.282e+04
		-5.241e+05	-7610.31	-3.06e-04	0.0	60.0	3.218e+04	-8566.82	126.84	5778.84	3.70e-03	-5.241e+05
40	35	-1.862e+04	1.28e-03	0.12	-420.00	0.0	3.200e+04	-8182.78	95.32	2509.65	-5719.38	-1.862e+04
		-5.223e+05	-5719.38	3.33e-06	0.0	60.0	3.200e+04	-8602.78	95.32	2509.65	1.28e-03	-5.223e+05
40	58	-2.148e+04	2.90e-03	0.12	-420.00	0.0	3.213e+04	-8159.00	104.05	4757.73	-6242.77	-2.148e+04
		-5.236e+05	-6242.77	-2.05e-04	0.0	60.0	3.213e+04	-8579.00	104.05	4757.73	2.90e-03	-5.236e+05
40	59	-1.996e+04	2.08e-03	0.12	-420.00	0.0	3.205e+04	-8170.62	118.12	3502.51	-7086.96	-1.996e+04
		-5.228e+05	-7086.96	-1.02e-04	0.0	60.0	3.205e+04	-8590.62	118.12	3502.51	2.08e-03	-5.228e+05
40	60	-2.012e+04	2.08e-03	0.12	-420.00	0.0	3.206e+04	-8174.03	118.19	3491.65	-7091.19	-2.012e+04
		-5.229e+05	-7091.19	-1.03e-04	0.0	60.0	3.206e+04	-8594.03	118.19	3491.65	2.08e-03	-5.229e+05
40	62	-2.151e+04	2.94e-03	0.12	-420.00	0.0	3.213e+04	-8158.05	117.09	4771.35	-7025.65	-2.151e+04
		-5.235e+05	-7025.65	-2.11e-04	0.0	60.0	3.213e+04	-8578.05	117.09	4771.35	2.94e-03	-5.235e+05
40	67	-1.993e+04	2.03e-03	0.12	-420.00	0.0	3.206e+04	-8171.57	105.07	3499.62	-6304.07	-1.993e+04
		-5.229e+05	-6304.07	-9.59e-05	0.0	60.0	3.206e+04	-8591.57	105.07	3499.62	2.03e-03	-5.229e+05
40	85	-2.072e+04	2.49e-03	0.12	-420.00	0.0	3.209e+04	-8164.81	111.08	4130.12	-6664.86	-2.072e+04
		-5.232e+05	-6664.86	-1.54e-04	0.0	60.0	3.209e+04	-8584.81	111.08	4130.12	2.49e-03	-5.232e+05
40	87	-1.947e+05	9.52e-03	0.27	-420.00	0.0	7.376e+04	-1.627e+04	282.02	1.603e+04	-1.692e+04	-1.947e+05
		-1.183e+06	-1.692e+04	-5.73e-04	0.0	60.0	7.376e+04	-1.669e+04	282.02	1.603e+04	9.52e-03	-1.183e+06
40	94	-1.976e+04	2.37e-03	0.12	-420.00	0.0	3.056e+04	-7765.86	106.13	3926.35	-6368.04	-1.976e+04
		-4.983e+05	-6368.04	-1.46e-04	0.0	60.0	3.056e+04	-8185.86	106.13	3926.35	2.37e-03	-4.983e+05
40	97	-1.780e+05	8.90e-03	0.26	-420.00	0.0	7.077e+04	-1.576e+04	268.75	1.499e+04	-1.612e+04	-1.780e+05
		-1.136e+06	-1.612e+04	-5.37e-04	0.0	60.0	7.077e+04	-1.618e+04	268.75	1.499e+04	8.90e-03	-1.136e+06
40	101	-2.065e+04	2.48e-03	0.12	-420.00	0.0	3.198e+04	-8136.32	110.73	4115.22	-6643.89	-2.065e+04
		-5.214e+05	-6643.89	-1.53e-04	0.0	60.0	3.198e+04	-8556.32	110.73	4115.22	2.48e-03	-5.214e+05
40	102	-2.072e+04	2.49e-03	0.12	-420.00	0.0	3.209e+04	-8164.81	111.08	4130.12	-6664.86	-2.072e+04
		-5.232e+05	-6664.86	-1.54e-04	0.0	60.0	3.209e+04	-8584.81	111.08	4130.12	2.49e-03	-5.232e+05
83	2	-5.460e+04	-2.37e-04	-0.42	-546.00	0.0	1.014e+05	2.686e+04	-10.55	936.04	-2.37e-04	-1.650e+06
		-1.650e+06	-633.15	-8.64e-06	0.0	60.0	1.014e+05	2.631e+04	-10.55	936.04	-633.15	-5.460e+04
83	4	-4.889e+04	-2.33e-04	-0.38	-420.00	0.0	9.179e+04	2.428e+04	-10.57	931.55	-2.33e-04	-1.493e+06
		-1.493e+06	-634.49	-8.37e-06	0.0	60.0	9.179e+04	2.386e+04	-10.57	931.55	-634.49	-4.889e+04
83	5	-2.353e+04	12.10	-0.15	-546.00	0.0	3.946e+04	1.056e+04	0.20	11.68	-1.70e-05	-6.406e+05
		-6.406e+05	-1.70e-05	-1.18e-06	0.0	60.0	3.946e+04	1.001e+04	0.20	11.68	12.10	-2.353e+04
83	7	-1.782e+04	10.76	-0.11	-420.00	0.0	2.982e+04	7982.86	0.18	7.20	-1.29e-05	-4.842e+05
		-4.842e+05	-1.29e-05	0.0	0.0	60.0	2.982e+04	7562.86	0.18	7.20	10.76	-1.782e+04
83	33	-1.926e+04	950.07	-0.12	-420.00	0.0	3.212e+04	8588.39	15.83	-1410.20	1.03e-03	-5.215e+05
		-5.215e+05	1.03e-03	1.33e-04	0.0	60.0	3.212e+04	8168.39	15.83	-1410.20	950.07	-1.926e+04
83	36	-1.883e+04	-1.05e-03	-0.12	-420.00	0.0	3.212e+04	8578.99	-15.69	1440.11	-1.05e-03	-5.214e+05
		-5.214e+05	-941.13	-1.35e-04	0.0	60.0	3.212e+04	8158.99	-15.69	1440.11	-941.13	-1.883e+04
83	46	-1.833e+04	3.43e-04	-0.12	-420.00	0.0	3.211e+04	8568.19	-3.74	-461.03	3.43e-04	-5.212e+05
		-5.212e+05	-224.30	4.51e-05	0.0	60.0	3.211e+04	8148.19	-3.74	-461.03	-224.30	-1.833e+04
83	47	-1.975e+04	233.25	-0.12	-420.00	0.0	3.213e+04	8599.19	3.89	490.94	-3.71e-04	-5.217e+05
		-5.217e+05	-3.71e-04	-4.69e-05	0.0	60.0	3.213e+04	8179.19	3.89	490.94	233.25	-1.975e+04
83	50	-1.833e+04	284.00	-0.12	-420.00	0.0	3.211e+04	8568.19	4.73	-459.77	3.06e-04	-5.212e+05
		-5.212e+05	3.06e-04	3.99e-05	0.0	60.0	3.211e+04	8148.19	4.73	-459.77	284.00	-1.833e+04
83	65	-1.913e+04	364.32	-0.12	-420.00	0.0	3.212e+04	8585.49	6.07	-539.34	3.80e-04	-5.215e+05
		-5.215e+05	3.80e-04	4.97e-05	0.0	60.0	3.212e+04	8165.49	6.07	-539.34	364.32	-1.913e+04
83	68	-1.896e+04	-4.07e-04	-0.12	-420.00	0.0	3.212e+04	8581.89	-5.92	569.25	-4.07e-04	-5.214e+05
		-5.214e+05	-355.37	-5.15e-05	0.0	60.0	3.212e+04	8161.89	-5.92	569.25	-355.37	-1.896e+04
83	78	-1.877e+04	1.21e-04	-0.12	-420.00	0.0	3.212e+04	8577.74	-1.38	-169.74	1.21e-04	-5.214e+05
		-5.214e+05	-82.91	1.65e-05	0.0	60.0	3.212e+04	8157.74	-1.38	-169.74	-82.91	-1.877e+04
83	79	-1.932e+04	91.86	-0.12	-420.00	0.0	3.213e+04	8589.64	1.53	199.65	-1.49e-04	-5.216e+05
		-5.216e+05	-1.49e-04	-1.83e-05	0.0	60.0	3.213e+04	8169.64	1.53	199.65	91.86	-1.932e+04
83	82	-1.877e+04	110.85	-0.12	-420.00	0.0	3.212e+04	8577.74	1.85	-169.26	1.07e-04	-5.214e+05
		-5.214e+05	1.07e-04	1.45e-05	0.0	60.0	3.212e+04	8157.74	1.85	-169.26	110.85	-1.877e+04
83	85	-1.904e+04	4.47	-0.12	-420.00	0.0	3.212e+04	8583.69	0.07	14.96	-1.37e-05	-5.215e+05
		-5.215e+05	-1.37e-05	0.0	0.0	60.0	3.212e+04	8163.69	0.07	14.96	4.47	-1.904e+04
83	87	-3.894e+04	-1.60e-04	-0.29	-420.00	0.0	7.190e+04	1.905e+04	-7.03	626.02	-1.60e-04	-1.169e+06
		-1.169e+06	-421.50	-5.88e-06	0.0	60.0	7.190e+04	1.863e+04	-7.03	626.02	-421.50	-3.894e+04
83	88	-1.823e+04	8.66	-0.12	-420.00	0.0	3.059e+04	8183.14	0.14	9.78	-1.31e-05	-4.966e+05
		-4.966e+05	-1.31e-05	0.0	0.0	60.0	3.059e+04	7763.14	0.14	9.78	8.66	-1.823e+04
83	97	-3.758e+04	-1.46e-04	-0.28	-420.00	0.0	6.910e+04	1.831e+04	-6.37	568.72	-1.46e-04	-1.124e+06
		-1.124e+06	-381.99	-5.38e-06	0.0	60.0	6.910e+04	1.789e+04	-6.37	568.72	-381.99	-3.758e+04
83	98	-1.899e+04	4.85	-0.12	-420.00	0.0	3.201e+04	8555.08	0.08	14.48	-1.37e-05	-5.197e+05
		-5.197e+05	-1.37e-05	0.0	0.0	60.0	3.201e+04	8135.08	0.08	14.48	4.85	-1.899e+04

Trave	Cmb	M3 mx/mn	M2 mx/mn	D 2 / D 3	Q 2 / Q 3	Pos.	N	V 2	V 3	T	M 2	M 3
83	102	-1.904e+04	4.47	-0.12	-420.00	0.0	3.212e+04	8583.69	0.07	14.96	-1.37e-05	-5.215e+05
		-5.215e+05	-1.37e-05	0.0	0.0	60.0	3.212e+04	8163.69	0.07	14.96	4.47	-1.904e+04
84	2	8.203e+05	-633.15	-0.43	-546.00	0.0	1.216e+05	2.276e+04	-0.07	1630.16	-633.15	-5.287e+05
		-5.287e+05	-637.38	-9.27e-06	0.0	60.0	1.216e+05	2.221e+04	-0.07	1630.16	-637.38	8.203e+05
84	5	2.979e+05	15.75	-0.15	-546.00	0.0	4.670e+04	8491.45	0.06	14.93	12.10	-1.952e+05
		-1.952e+05	12.10	-1.03e-06	0.0	60.0	4.670e+04	7945.45	0.06	14.93	15.75	2.979e+05
84	7	2.251e+05	13.44	-0.12	-420.00	0.0	3.530e+04	6421.32	0.04	8.33	10.76	-1.475e+05
		-1.475e+05	10.76	-1.70e-06	0.0	60.0	3.530e+04	6001.32	0.04	8.33	13.44	2.251e+05
84	20	7.450e+05	-634.49	-0.39	-420.00	0.0	1.098e+05	2.062e+04	-0.09	1623.56	-634.49	-4.795e+05
		-4.795e+05	-639.69	-9.03e-06	0.0	60.0	1.098e+05	2.020e+04	-0.09	1623.56	-639.69	7.450e+05
84	30	2.430e+05	1489.03	-0.13	-420.00	0.0	3.801e+04	6904.84	-11.00	-2101.75	950.07	-1.587e+05
		-1.587e+05	950.07	1.47e-04	0.0	60.0	3.801e+04	6484.84	-11.00	-2101.75	1489.03	2.430e+05
84	31	2.423e+05	-941.13	-0.13	-420.00	0.0	3.803e+04	6896.07	11.10	2145.77	-941.13	-1.588e+05
		-1.588e+05	-1473.68	-1.49e-04	0.0	60.0	3.803e+04	6476.07	11.10	2145.77	-1473.68	2.423e+05
84	45	2.415e+05	-216.67	-0.13	-420.00	0.0	3.806e+04	6885.87	-2.70	-578.82	-216.67	-1.590e+05
		-1.590e+05	-338.52	4.79e-05	0.0	60.0	3.806e+04	6465.87	-2.70	-578.82	-338.52	2.415e+05
84	48	2.438e+05	353.87	-0.13	-420.00	0.0	3.798e+04	6915.04	2.81	622.84	225.62	-1.586e+05
		-1.586e+05	225.62	-4.95e-05	0.0	60.0	3.798e+04	6495.04	2.81	622.84	353.87	2.438e+05
84	50	2.438e+05	438.67	-0.13	-420.00	0.0	3.798e+04	6915.05	-3.55	-677.64	284.00	-1.586e+05
		-1.586e+05	284.00	4.43e-05	0.0	60.0	3.798e+04	6495.05	-3.55	-677.64	438.67	2.438e+05
84	51	2.415e+05	-275.05	-0.13	-420.00	0.0	3.806e+04	6885.87	3.66	721.66	-275.05	-1.590e+05
		-1.590e+05	-423.32	-4.58e-05	0.0	60.0	3.806e+04	6465.87	3.66	721.66	-423.32	2.415e+05
84	62	2.428e+05	567.90	-0.13	-420.00	0.0	3.801e+04	6902.14	-4.13	-803.18	364.32	-1.588e+05
		-1.588e+05	364.32	5.53e-05	0.0	60.0	3.801e+04	6482.14	-4.13	-803.18	567.90	2.428e+05
84	63	2.425e+05	-355.37	-0.13	-420.00	0.0	3.802e+04	6898.78	4.23	847.20	-355.37	-1.588e+05
		-1.588e+05	-552.55	-5.69e-05	0.0	60.0	3.802e+04	6478.78	4.23	847.20	-552.55	2.425e+05
84	77	2.422e+05	-80.01	-0.13	-420.00	0.0	3.803e+04	6894.86	-0.99	-211.57	-80.01	-1.589e+05
		-1.589e+05	-123.22	1.76e-05	0.0	60.0	3.803e+04	6474.86	-0.99	-211.57	-123.22	2.422e+05
84	80	2.431e+05	138.57	-0.13	-420.00	0.0	3.800e+04	6906.05	1.09	255.59	88.96	-1.587e+05
		-1.587e+05	88.96	-1.92e-05	0.0	60.0	3.800e+04	6486.05	1.09	255.59	138.57	2.431e+05
84	82	2.431e+05	170.64	-0.13	-420.00	0.0	3.800e+04	6906.05	-1.31	-249.31	110.85	-1.587e+05
		-1.587e+05	110.85	1.62e-05	0.0	60.0	3.800e+04	6486.05	-1.31	-249.31	170.64	2.431e+05
84	83	2.422e+05	-101.90	-0.13	-420.00	0.0	3.803e+04	6894.86	1.42	293.32	-101.90	-1.589e+05
		-1.589e+05	-155.29	-1.78e-05	0.0	60.0	3.803e+04	6474.86	1.42	293.32	-155.29	2.422e+05
84	85	2.426e+05	7.68	-0.13	-420.00	0.0	3.802e+04	6900.46	0.05	22.01	4.47	-1.588e+05
		-1.588e+05	4.47	-1.70e-06	0.0	60.0	3.802e+04	6480.46	0.05	22.01	7.68	2.426e+05
84	87	5.792e+05	-421.50	-0.30	-420.00	0.0	8.612e+04	1.609e+04	-0.04	1089.71	-421.50	-3.736e+05
		-3.736e+05	-423.90	-6.29e-06	0.0	60.0	8.612e+04	1.567e+04	-0.04	1089.71	-423.90	5.792e+05
84	88	2.310e+05	11.52	-0.12	-420.00	0.0	3.620e+04	6581.03	0.05	12.89	8.66	-1.513e+05
		-1.513e+05	8.66	-1.70e-06	0.0	60.0	3.620e+04	6161.03	0.05	12.89	11.52	2.310e+05
84	95	5.775e+05	-421.50	-0.30	-420.00	0.0	8.586e+04	1.605e+04	-0.04	1089.71	-421.50	-3.726e+05
		-3.726e+05	-423.90	-6.29e-06	0.0	60.0	8.586e+04	1.563e+04	-0.04	1089.71	-423.90	5.775e+05
84	97	5.545e+05	-381.99	-0.29	-420.00	0.0	8.271e+04	1.542e+04	-0.03	989.65	-381.99	-3.579e+05
		-3.579e+05	-383.57	-5.74e-06	0.0	60.0	8.271e+04	1.500e+04	-0.03	989.65	-383.57	5.545e+05
84	98	2.418e+05	8.02	-0.12	-420.00	0.0	3.789e+04	6877.64	0.05	21.18	4.85	-1.582e+05
		-1.582e+05	4.85	-1.70e-06	0.0	60.0	3.789e+04	6457.64	0.05	21.18	8.02	2.418e+05
84	102	2.426e+05	7.68	-0.13	-420.00	0.0	3.802e+04	6900.46	0.05	22.01	4.47	-1.588e+05
		-1.588e+05	4.47	-1.70e-06	0.0	60.0	3.802e+04	6480.46	0.05	22.01	7.68	2.426e+05
85	2	1.368e+06	-459.41	-0.41	-546.00	0.0	1.537e+05	2.176e+04	2.97	2180.55	-637.38	7.867e+04
		7.867e+04	-637.38	-1.05e-05	0.0	60.0	1.537e+05	2.121e+04	2.97	2180.55	-459.41	1.368e+06
85	5	4.825e+05	21.92	-0.15	-546.00	0.0	5.805e+04	7722.23	0.10	8.31	15.75	3.556e+04
		3.556e+04	15.75	0.0	0.0	60.0	5.805e+04	7176.23	0.10	8.31	21.92	4.825e+05
85	7	3.646e+05	17.75	-0.11	-420.00	0.0	4.387e+04	5839.98	0.07	2.09	13.44	2.684e+04
		2.684e+04	13.44	0.0	0.0	60.0	4.387e+04	5419.98	0.07	2.09	17.75	3.646e+05
85	19	3.646e+05	17.05	-0.11	-420.00	0.0	4.387e+04	5840.00	0.08	5.48	12.40	2.684e+04
		2.684e+04	12.40	0.0	0.0	60.0	4.387e+04	5420.00	0.08	5.48	17.05	3.646e+05
85	20	1.246e+06	-463.58	-0.38	-420.00	0.0	1.390e+05	1.982e+04	2.94	2174.33	-639.69	6.964e+04
		6.964e+04	-639.69	-1.03e-05	0.0	60.0	1.390e+05	1.940e+04	2.94	2174.33	-463.58	1.246e+06
85	30	3.933e+05	1489.03	-0.12	-420.00	0.0	4.723e+04	6277.65	-9.37	-2188.89	1489.03	2.925e+04
		2.925e+04	-1208.91	1.58e-04	0.0	60.0	4.723e+04	5857.65	-9.37	-2188.89	-1208.91	3.933e+05
85	31	3.925e+05	1236.72	-0.12	-420.00	0.0	4.727e+04	6270.67	9.58	2230.37	-1473.68	2.884e+04
		2.884e+04	-1473.68	-1.59e-04	0.0	60.0	4.727e+04	5850.67	9.58	2230.37	1236.72	3.925e+05
85	45	3.915e+05	-252.64	-0.12	-420.00	0.0	4.732e+04	6262.64	-3.40	-602.20	-338.52	2.836e+04
		2.836e+04	-338.52	5.03e-05	0.0	60.0	4.732e+04	5842.64	-3.40	-602.20	-252.64	3.915e+05
85	48	3.943e+05	353.87	-0.12	-420.00	0.0	4.719e+04	6285.68	3.61	643.69	353.87	2.973e+04
		2.973e+04	280.46	-5.18e-05	0.0	60.0	4.719e+04	5865.68	3.61	643.69	280.46	3.943e+05
85	50	3.943e+05	438.67	-0.12	-420.00	0.0	4.719e+04	6285.70	-2.43	-699.98	438.67	2.973e+04
		2.973e+04	-384.95	4.74e-05	0.0	60.0	4.719e+04	5865.70	-2.43	-699.98	-384.95	3.943e+05
85	51	3.915e+05	412.77	-0.12	-420.00	0.0	4.732e+04	6262.62	2.64	741.46	-423.32	2.836e+04
		2.836e+04	-423.32	-4.89e-05	0.0	60.0	4.732e+04	5842.62	2.64	741.46	412.77	3.915e+05
85	62	3.931e+05	567.90	-0.12	-420.00	0.0	4.725e+04	6275.50	-3.50	-841.55	567.90	2.912e+04
		2.912e+04	-447.38	5.93e-05	0.0	60.0	4.725e+04	5855.50	-3.50	-841.55	-447.38	3.931e+05
85	63	3.927e+05	475.19	-0.12	-420.00	0.0	4.726e+04	6272.82	3.71	883.03	-552.55	2.897e+04
		2.897e+04	-552.55	-6.08e-05	0.0	60.0	4.726e+04	5852.82	3.71	883.03	475.19	3.927e+05
85	77	3.924e+05	-86.36	-0.12	-420.00	0.0	4.728e+04	6269.74	-1.23	-222.66	-123.22	2.878e+04

Trave	Cmb	M3 mx/mn	M2 mx/mn	D 2 / D 3	Q 2 / Q 3	Pos.	N	V 2	V 3	T	M 2	M 3
		2.878e+04	-123.22	1.85e-05	0.0	60.0	4.728e+04	5849.74	-1.23	-222.66	-86.36	3.924e+05
85	80	3.934e+05	138.57	-0.12	-420.00	0.0	4.723e+04	6278.58	1.44	264.15	138.57	2.931e+04
		2.931e+04	114.17	-2.00e-05	0.0	60.0	4.723e+04	5858.58	1.44	264.15	114.17	3.934e+05
85	82	3.934e+05	170.65	-0.12	-420.00	0.0	4.723e+04	6278.59	-0.86	-259.92	170.65	2.931e+04
		2.931e+04	-136.65	1.74e-05	0.0	60.0	4.723e+04	5858.59	-0.86	-259.92	-136.65	3.934e+05
85	83	3.924e+05	164.46	-0.12	-420.00	0.0	4.728e+04	6269.73	1.07	301.41	-155.29	2.878e+04
		2.878e+04	-155.29	-1.89e-05	0.0	60.0	4.728e+04	5849.73	1.07	301.41	164.46	3.924e+05
85	85	3.929e+05	13.91	-0.12	-420.00	0.0	4.725e+04	6274.16	0.10	20.74	7.68	2.904e+04
		2.904e+04	7.68	0.0	0.0	60.0	4.725e+04	5854.16	0.10	20.74	13.91	3.929e+05
85	87	9.643e+05	-304.42	-0.29	-420.00	0.0	1.088e+05	1.534e+04	1.99	1456.47	-423.90	5.632e+04
		5.632e+04	-423.90	-7.13e-06	0.0	60.0	1.088e+05	1.492e+04	1.99	1456.47	-304.42	9.643e+05
85	88	3.741e+05	16.47	-0.12	-420.00	0.0	4.500e+04	5984.71	0.08	8.31	11.52	2.758e+04
		2.758e+04	11.52	0.0	0.0	60.0	4.500e+04	5564.71	0.08	8.31	16.47	3.741e+05
85	94	3.741e+05	16.00	-0.12	-420.00	0.0	4.500e+04	5984.72	0.09	10.57	10.82	2.758e+04
		2.758e+04	10.82	0.0	0.0	60.0	4.500e+04	5564.72	0.09	10.57	16.00	3.741e+05
85	95	9.617e+05	-304.42	-0.29	-420.00	0.0	1.084e+05	1.530e+04	1.99	1456.47	-423.90	5.611e+04
		5.611e+04	-423.90	-7.13e-06	0.0	60.0	1.084e+05	1.488e+04	1.99	1456.47	-304.42	9.617e+05
85	97	9.217e+05	-274.47	-0.28	-420.00	0.0	1.043e+05	1.466e+04	1.82	1322.05	-383.57	5.473e+04
		5.473e+04	-383.57	-6.50e-06	0.0	60.0	1.043e+05	1.424e+04	1.82	1322.05	-274.47	9.217e+05
85	98	3.915e+05	14.14	-0.12	-420.00	0.0	4.709e+04	6253.48	0.10	19.61	8.02	2.894e+04
		2.894e+04	8.02	0.0	0.0	60.0	4.709e+04	5833.48	0.10	19.61	14.14	3.915e+05
85	101	3.915e+05	13.91	-0.12	-420.00	0.0	4.709e+04	6253.49	0.10	20.74	7.68	2.894e+04
		2.894e+04	7.68	0.0	0.0	60.0	4.709e+04	5833.49	0.10	20.74	13.91	3.915e+05
85	102	3.929e+05	13.91	-0.12	-420.00	0.0	4.725e+04	6274.16	0.10	20.74	7.68	2.904e+04
		2.904e+04	7.68	0.0	0.0	60.0	4.725e+04	5854.16	0.10	20.74	13.91	3.929e+05
86	2	1.811e+06	-273.04	-0.39	-546.00	0.0	1.857e+05	2.001e+04	3.11	2538.82	-459.41	6.273e+05
		6.273e+05	-459.41	-1.16e-05	0.0	60.0	1.857e+05	1.946e+04	3.11	2538.82	-273.04	1.811e+06
86	5	6.204e+05	28.75	-0.14	-546.00	0.0	6.887e+04	6756.38	0.11	-2.22	21.92	2.314e+05
		2.314e+05	21.92	0.0	0.0	60.0	6.887e+04	6210.38	0.11	-2.22	28.75	6.204e+05
86	7	4.688e+05	22.60	-0.11	-420.00	0.0	5.205e+04	5109.98	0.08	-6.72	17.75	1.748e+05
		1.748e+05	17.75	0.0	0.0	60.0	5.205e+04	4689.98	0.08	-6.72	22.60	4.688e+05
86	19	4.688e+05	22.22	-0.11	-420.00	0.0	5.205e+04	5110.00	0.09	-2.77	17.05	1.748e+05
		1.748e+05	17.05	0.0	0.0	60.0	5.205e+04	4690.00	0.09	-2.77	22.22	4.688e+05
86	20	1.655e+06	-279.19	-0.35	-420.00	0.0	1.683e+05	1.831e+04	3.07	2534.32	-463.58	5.688e+05
		5.688e+05	-463.58	-1.14e-05	0.0	60.0	1.683e+05	1.789e+04	3.07	2534.32	-279.19	1.655e+06
86	29	5.047e+05	-868.68	-0.11	-420.00	0.0	5.609e+04	5485.78	-14.61	-2234.90	-1226.53	1.881e+05
		1.881e+05	-1226.53	1.61e-04	0.0	60.0	5.609e+04	5065.78	-14.61	-2234.90	-868.68	5.047e+05
86	32	5.056e+05	1254.35	-0.11	-420.00	0.0	5.604e+04	5490.19	14.83	2264.92	1254.35	1.888e+05
		1.888e+05	909.71	-1.62e-04	0.0	60.0	5.604e+04	5070.19	14.83	2264.92	909.71	5.056e+05
86	45	5.036e+05	-243.36	-0.11	-420.00	0.0	5.615e+04	5480.49	-4.88	-614.93	-252.64	1.874e+05
		1.874e+05	-252.64	4.99e-05	0.0	60.0	5.615e+04	5060.49	-4.88	-614.93	-243.36	5.036e+05
86	46	5.066e+05	-311.39	-0.11	-420.00	0.0	5.598e+04	5495.50	-4.48	-689.37	-311.39	1.895e+05
		1.895e+05	-326.17	5.06e-05	0.0	60.0	5.598e+04	5075.50	-4.48	-689.37	-326.17	5.066e+05
86	48	5.066e+05	284.40	-0.11	-420.00	0.0	5.598e+04	5495.48	5.10	644.95	280.46	1.895e+05
		1.895e+05	280.46	-5.13e-05	0.0	60.0	5.598e+04	5075.48	5.10	644.95	284.40	5.066e+05
86	51	5.036e+05	412.77	-0.11	-420.00	0.0	5.615e+04	5480.47	4.34	723.86	412.77	1.874e+05
		1.874e+05	324.95	-4.94e-05	0.0	60.0	5.615e+04	5060.47	4.34	723.86	324.95	5.036e+05
86	61	5.050e+05	-314.90	-0.11	-420.00	0.0	5.607e+04	5487.14	-5.47	-862.45	-454.08	1.883e+05
		1.883e+05	-454.08	6.04e-05	0.0	60.0	5.607e+04	5067.14	-5.47	-862.45	-314.90	5.050e+05
86	64	5.053e+05	481.89	-0.11	-420.00	0.0	5.605e+04	5488.83	5.69	892.47	481.89	1.886e+05
		1.886e+05	355.93	-6.17e-05	0.0	60.0	5.605e+04	5068.83	5.69	892.47	355.93	5.053e+05
86	77	5.045e+05	-78.87	-0.11	-420.00	0.0	5.609e+04	5485.11	-1.78	-231.19	-86.36	1.880e+05
		1.880e+05	-86.36	1.85e-05	0.0	60.0	5.609e+04	5065.11	-1.78	-231.19	-78.87	5.045e+05
86	78	5.057e+05	-108.69	-0.11	-420.00	0.0	5.603e+04	5490.87	-1.63	-259.48	-108.69	1.889e+05
		1.889e+05	-110.34	1.87e-05	0.0	60.0	5.603e+04	5070.87	-1.63	-259.48	-110.34	5.057e+05
86	80	5.057e+05	119.91	-0.11	-420.00	0.0	5.603e+04	5490.86	2.00	261.21	114.17	1.889e+05
		1.889e+05	114.17	-1.98e-05	0.0	60.0	5.603e+04	5070.86	2.00	261.21	119.91	5.057e+05
86	83	5.045e+05	164.46	-0.11	-420.00	0.0	5.609e+04	5485.10	1.71	291.12	164.46	1.880e+05
		1.880e+05	135.46	-1.91e-05	0.0	60.0	5.609e+04	5065.10	1.71	291.12	135.46	5.045e+05
86	85	5.051e+05	20.52	-0.11	-420.00	0.0	5.606e+04	5487.99	0.11	15.01	13.91	1.884e+05
		1.884e+05	13.91	0.0	0.0	60.0	5.606e+04	5067.99	0.11	15.01	20.52	5.051e+05
86	87	1.275e+06	-179.29	-0.27	-420.00	0.0	1.313e+05	1.407e+04	2.09	1694.55	-304.42	4.433e+05
		4.433e+05	-304.42	-7.83e-06	0.0	60.0	1.313e+05	1.365e+04	2.09	1694.55	-179.29	1.275e+06
86	88	4.809e+05	21.90	-0.11	-420.00	0.0	5.339e+04	5235.98	0.09	0.52	16.47	1.794e+05
		1.794e+05	16.47	0.0	0.0	60.0	5.339e+04	4815.98	0.09	0.52	21.90	4.809e+05
86	94	4.809e+05	21.65	-0.11	-420.00	0.0	5.339e+04	5236.00	0.09	3.16	16.00	1.794e+05
		1.794e+05	16.00	0.0	0.0	60.0	5.339e+04	4816.00	0.09	3.16	21.65	4.809e+05
86	95	1.271e+06	-179.29	-0.27	-420.00	0.0	1.309e+05	1.403e+04	2.09	1694.55	-304.42	4.420e+05
		4.420e+05	-304.42	-7.83e-06	0.0	60.0	1.309e+05	1.361e+04	2.09	1694.55	-179.29	1.271e+06
86	97	1.217e+06	-160.33	-0.26	-420.00	0.0	1.258e+05	1.341e+04	1.90	1537.26	-274.47	4.248e+05
		4.248e+05	-274.47	-7.13e-06	0.0	60.0	1.258e+05	1.299e+04	1.90	1537.26	-160.33	1.217e+06
86	98	5.034e+05	20.64	-0.11	-420.00	0.0	5.587e+04	5469.98	0.11	13.69	14.14	1.878e+05
		1.878e+05	14.14	0.0	0.0	60.0	5.587e+04	5049.98	0.11	13.69	20.64	5.034e+05
86	101	5.034e+05	20.52	-0.11	-420.00	0.0	5.587e+04	5469.99	0.11	15.01	13.91	1.878e+05
		1.878e+05	13.91	0.0	0.0	60.0	5.587e+04	5049.99	0.11	15.01	20.52	5.034e+05

Trave	Cmb	M3 mx/mn	M2 mx/mn	D 2 / D 3	Q 2 / Q 3	Pos.	N	V 2	V 3	T	M 2	M 3
86	102	5.051e+05	20.52	-0.11	-420.00	0.0	5.606e+04	5487.99	0.11	15.01	13.91	1.884e+05
		1.884e+05	13.91	0.0	0.0	60.0	5.606e+04	5067.99	0.11	15.01	20.52	5.051e+05
87	2	2.189e+06	-123.19	-0.35	-546.00	0.0	2.147e+05	1.776e+04	2.50	2722.18	-273.04	1.140e+06
		1.140e+06	-273.04	-1.25e-05	0.0	60.0	2.147e+05	1.721e+04	2.50	2722.18	-123.19	2.189e+06
87	5	7.316e+05	34.27	-0.12	-546.00	0.0	7.825e+04	5760.49	0.09	-15.34	28.75	4.023e+05
		4.023e+05	28.75	0.0	0.0	60.0	7.825e+04	5214.49	0.09	-15.34	34.27	7.316e+05
87	7	5.529e+05	26.54	-0.09	-420.00	0.0	5.914e+04	4357.28	0.07	-17.12	22.60	3.040e+05
		3.040e+05	22.60	0.0	0.0	60.0	5.914e+04	3937.28	0.07	-17.12	26.54	5.529e+05
87	19	5.529e+05	26.40	-0.09	-420.00	0.0	5.914e+04	4357.30	0.07	-12.93	22.22	3.040e+05
		3.040e+05	22.22	0.0	0.0	60.0	5.914e+04	3937.30	0.07	-12.93	26.40	5.529e+05
87	20	2.004e+06	-130.92	-0.31	-420.00	0.0	1.949e+05	1.631e+04	2.47	2720.40	-279.19	1.038e+06
		1.038e+06	-279.19	-1.23e-05	0.0	60.0	1.949e+05	1.589e+04	2.47	2720.40	-130.92	2.004e+06
87	26	5.961e+05	-1009.51	-0.10	-420.00	0.0	6.367e+04	4678.13	-18.89	-2374.08	-1009.51	3.280e+05
		3.280e+05	-1723.15	1.59e-04	0.0	60.0	6.367e+04	4258.13	-18.89	-2374.08	-1723.15	5.961e+05
87	27	5.952e+05	1774.69	-0.10	-420.00	0.0	6.373e+04	4676.60	19.06	2385.96	1050.55	3.272e+05
		3.272e+05	1050.55	-1.60e-04	0.0	60.0	6.373e+04	4256.60	19.06	2385.96	1774.69	5.952e+05
87	47	5.941e+05	593.04	-0.10	-420.00	0.0	6.380e+04	4674.75	5.70	707.47	367.20	3.263e+05
		3.263e+05	367.20	-4.86e-05	0.0	60.0	6.380e+04	4254.75	5.70	707.47	593.04	5.941e+05
87	49	5.941e+05	-201.11	-0.10	-420.00	0.0	6.380e+04	4674.73	-5.54	-725.38	-201.11	3.263e+05
		3.263e+05	-304.01	4.63e-05	0.0	60.0	6.380e+04	4254.73	-5.54	-725.38	-304.01	5.941e+05
87	50	5.972e+05	-283.92	-0.10	-420.00	0.0	6.361e+04	4679.97	-5.36	-697.96	-283.92	3.290e+05
		3.290e+05	-397.63	4.66e-05	0.0	60.0	6.361e+04	4259.97	-5.36	-697.96	-397.63	5.972e+05
87	52	5.972e+05	355.55	-0.10	-420.00	0.0	6.361e+04	4680.00	5.72	737.26	242.15	3.290e+05
		3.290e+05	242.15	-4.74e-05	0.0	60.0	6.361e+04	4260.00	5.72	737.26	355.55	5.972e+05
87	58	5.958e+05	-367.96	-0.10	-420.00	0.0	6.369e+04	4677.66	-7.09	-915.09	-367.96	3.278e+05
		3.278e+05	-635.88	5.98e-05	0.0	60.0	6.369e+04	4257.66	-7.09	-915.09	-635.88	5.958e+05
87	59	5.955e+05	687.42	-0.10	-420.00	0.0	6.371e+04	4677.07	7.26	926.97	408.99	3.275e+05
		3.275e+05	408.99	-6.09e-05	0.0	60.0	6.371e+04	4257.07	7.26	926.97	687.42	5.955e+05
87	79	5.951e+05	240.45	-0.10	-420.00	0.0	6.374e+04	4676.36	2.21	277.51	151.38	3.271e+05
		3.271e+05	151.38	-1.87e-05	0.0	60.0	6.374e+04	4256.36	2.21	277.51	240.45	5.951e+05
87	81	5.951e+05	-62.96	-0.10	-420.00	0.0	6.374e+04	4676.35	-2.04	-276.92	-62.96	3.271e+05
		3.271e+05	-99.04	1.72e-05	0.0	60.0	6.374e+04	4256.35	-2.04	-276.92	-99.04	5.951e+05
87	82	5.962e+05	-94.43	-0.10	-420.00	0.0	6.367e+04	4678.36	-1.97	-266.50	-94.43	3.281e+05
		3.281e+05	-134.62	1.73e-05	0.0	60.0	6.367e+04	4258.36	-1.97	-266.50	-134.62	5.962e+05
87	84	5.962e+05	150.58	-0.10	-420.00	0.0	6.367e+04	4678.37	2.22	288.79	103.99	3.281e+05
		3.281e+05	103.99	-1.83e-05	0.0	60.0	6.367e+04	4258.37	2.22	288.79	150.58	5.962e+05
87	85	5.957e+05	25.77	-0.10	-420.00	0.0	6.370e+04	4677.36	0.09	5.94	20.52	3.276e+05
		3.276e+05	20.52	0.0	0.0	60.0	6.370e+04	4257.36	0.09	5.94	25.77	5.957e+05
87	87	1.539e+06	-78.69	-0.24	-420.00	0.0	1.516e+05	1.246e+04	1.68	1815.58	-179.29	8.036e+05
		8.036e+05	-179.29	-8.38e-06	0.0	60.0	1.516e+05	1.204e+04	1.68	1815.58	-78.69	1.539e+06
87	88	5.671e+05	26.28	-0.10	-420.00	0.0	6.066e+04	4463.98	0.07	-9.43	21.90	3.119e+05
		3.119e+05	21.90	0.0	0.0	60.0	6.066e+04	4043.98	0.07	-9.43	26.28	5.671e+05
87	94	5.671e+05	26.19	-0.10	-420.00	0.0	6.066e+04	4463.99	0.08	-6.64	21.65	3.119e+05
		3.119e+05	21.65	0.0	0.0	60.0	6.066e+04	4043.99	0.08	-6.64	26.19	5.671e+05
87	95	1.535e+06	-78.69	-0.24	-420.00	0.0	1.512e+05	1.243e+04	1.68	1815.58	-179.29	8.014e+05
		8.014e+05	-179.29	-8.38e-06	0.0	60.0	1.512e+05	1.201e+04	1.68	1815.58	-78.69	1.535e+06
87	97	1.466e+06	-68.62	-0.23	-420.00	0.0	1.452e+05	1.185e+04	1.53	1645.94	-160.33	7.682e+05
		7.682e+05	-160.33	-7.61e-06	0.0	60.0	1.452e+05	1.143e+04	1.53	1645.94	-68.62	1.466e+06
87	98	5.936e+05	25.82	-0.10	-420.00	0.0	6.348e+04	4662.12	0.09	4.54	20.64	3.265e+05
		3.265e+05	20.64	0.0	0.0	60.0	6.348e+04	4242.12	0.09	4.54	25.82	5.936e+05
87	101	5.936e+05	25.77	-0.10	-420.00	0.0	6.348e+04	4662.13	0.09	5.94	20.52	3.265e+05
		3.265e+05	20.52	0.0	0.0	60.0	6.348e+04	4242.13	0.09	5.94	25.77	5.936e+05
87	102	5.957e+05	25.77	-0.10	-420.00	0.0	6.370e+04	4677.36	0.09	5.94	20.52	3.276e+05
		3.276e+05	20.52	0.0	0.0	60.0	6.370e+04	4257.36	0.09	5.94	25.77	5.957e+05
88	1	8.257e+05	37.60	-0.11	-546.00	0.0	8.679e+04	4795.17	0.06	-25.88	34.13	5.544e+05
		5.544e+05	34.13	0.0	0.0	60.0	8.679e+04	4249.17	0.06	-25.88	37.60	8.257e+05
88	2	2.484e+06	-5.26	-0.29	-546.00	0.0	2.395e+05	1.474e+04	1.97	2765.35	-123.19	1.616e+06
		1.616e+06	-123.19	-1.32e-05	0.0	60.0	2.395e+05	1.420e+04	1.97	2765.35	-5.26	2.484e+06
88	7	6.189e+05	28.85	-0.08	-420.00	0.0	6.505e+04	3599.44	0.04	-28.42	26.54	4.155e+05
		4.155e+05	26.54	0.0	0.0	60.0	6.505e+04	3179.44	0.04	-28.42	28.85	6.189e+05
88	20	2.278e+06	-13.97	-0.27	-420.00	0.0	2.178e+05	1.355e+04	1.95	2766.99	-130.92	1.477e+06
		1.477e+06	-130.92	-1.30e-05	0.0	60.0	2.178e+05	1.313e+04	1.95	2766.99	-13.97	2.278e+06
88	26	6.672e+05	-1723.14	-0.09	-420.00	0.0	7.004e+04	3861.87	-19.47	-2554.41	-1723.14	4.481e+05
		4.481e+05	-2695.65	1.41e-04	0.0	60.0	7.004e+04	3441.87	-19.47	-2554.41	-2695.65	6.672e+05
88	27	6.663e+05	2753.75	-0.09	-420.00	0.0	7.010e+04	3860.40	19.58	2543.52	1774.68	4.472e+05
		4.472e+05	1774.68	-1.42e-04	0.0	60.0	7.010e+04	3440.40	19.58	2543.52	2753.75	6.663e+05
88	50	6.681e+05	-397.63	-0.09	-420.00	0.0	6.997e+04	3863.65	-5.87	-747.44	-397.63	4.492e+05
		4.492e+05	-677.62	4.28e-05	0.0	60.0	6.997e+04	3443.65	-5.87	-747.44	-677.62	6.681e+05
88	51	6.654e+05	735.73	-0.09	-420.00	0.0	7.016e+04	3858.62	5.98	736.55	449.17	4.462e+05
		4.462e+05	449.17	-4.36e-05	0.0	60.0	7.016e+04	3438.62	5.98	736.55	735.73	6.654e+05
88	58	6.669e+05	-635.88	-0.09	-420.00	0.0	7.006e+04	3861.42	-7.32	-983.41	-635.88	4.479e+05
		4.479e+05	-1002.01	5.31e-05	0.0	60.0	7.006e+04	3441.42	-7.32	-983.41	-1002.01	6.669e+05
88	59	6.666e+05	1060.11	-0.09	-420.00	0.0	7.008e+04	3860.85	7.43	972.52	687.42	4.475e+05
		4.475e+05	687.42	-5.39e-05	0.0	60.0	7.008e+04	3440.85	7.43	972.52	1060.11	6.666e+05
88	82	6.673e+05	-134.62	-0.09	-420.00	0.0	7.003e+04	3862.10	-2.18	-290.30	-134.62	4.483e+05

Trave	Cmb	M3 mx/mn	M2 mx/mn	D 2 / D 3	Q 2 / Q 3	Pos.	N	V 2	V 3	T	M 2	M 3
		4.483e+05	-238.56	1.59e-05	0.0	60.0	7.003e+04	3442.10	-2.18	-290.30	-238.56	6.673e+05
88	83	6.662e+05	296.66	-0.09	-420.00	0.0	7.010e+04	3860.17	2.29	279.41	186.16	4.471e+05
		4.471e+05	186.16	-1.68e-05	0.0	60.0	7.010e+04	3440.17	2.29	279.41	296.66	6.662e+05
88	85	6.668e+05	29.05	-0.09	-420.00	0.0	7.007e+04	3861.13	0.05	-5.44	25.77	4.477e+05
		4.477e+05	25.77	0.0	0.0	60.0	7.007e+04	3441.13	0.05	-5.44	29.05	6.668e+05
88	86	6.394e+05	28.94	-0.08	-420.00	0.0	6.720e+04	3711.60	0.05	-17.98	26.19	4.293e+05
		4.293e+05	26.19	0.0	0.0	60.0	6.720e+04	3291.60	0.05	-17.98	28.94	6.394e+05
88	87	1.745e+06	0.37	-0.21	-420.00	0.0	1.690e+05	1.034e+04	1.32	1842.84	-78.69	1.137e+06
		1.137e+06	-78.69	-8.82e-06	0.0	60.0	1.690e+05	9922.57	1.32	1842.84	0.37	1.745e+06
88	88	6.348e+05	28.92	-0.08	-420.00	0.0	6.672e+04	3686.67	0.04	-20.76	26.28	4.262e+05
		4.262e+05	26.28	0.0	0.0	60.0	6.672e+04	3266.67	0.04	-20.76	28.92	6.348e+05
88	95	1.741e+06	0.37	-0.21	-420.00	0.0	1.685e+05	1.032e+04	1.32	1842.84	-78.69	1.134e+06
		1.134e+06	-78.69	-8.82e-06	0.0	60.0	1.685e+05	9897.66	1.32	1842.84	0.37	1.741e+06
88	96	6.668e+05	29.05	-0.09	-420.00	0.0	7.007e+04	3861.13	0.05	-5.44	25.77	4.477e+05
		4.477e+05	25.77	0.0	0.0	60.0	7.007e+04	3441.13	0.05	-5.44	29.05	6.668e+05
88	97	1.662e+06	3.33	-0.20	-420.00	0.0	1.617e+05	9829.01	1.20	1669.30	-68.62	1.085e+06
		1.085e+06	-68.62	-8.00e-06	0.0	60.0	1.617e+05	9409.01	1.20	1669.30	3.33	1.662e+06
88	98	6.645e+05	29.04	-0.09	-420.00	0.0	6.983e+04	3848.67	0.05	-6.84	25.82	4.462e+05
		4.462e+05	25.82	0.0	0.0	60.0	6.983e+04	3428.67	0.05	-6.84	29.04	6.645e+05
88	102	6.668e+05	29.05	-0.09	-420.00	0.0	7.007e+04	3861.13	0.05	-5.44	25.77	4.477e+05
		4.477e+05	25.77	0.0	0.0	60.0	7.007e+04	3441.13	0.05	-5.44	29.05	6.668e+05
89	2	2.668e+06	98.98	-0.23	-546.00	0.0	2.590e+05	1.080e+04	1.74	2699.98	-5.26	2.036e+06
		2.036e+06	-5.26	-1.37e-05	0.0	60.0	2.590e+05	1.026e+04	1.74	2699.98	98.98	2.668e+06
89	7	6.670e+05	29.22	-0.07	-420.00	0.0	6.977e+04	2842.40	6.24e-03	-39.73	28.85	5.091e+05
		5.091e+05	28.85	0.0	0.0	60.0	6.977e+04	2422.40	6.24e-03	-39.73	29.22	6.670e+05
89	8	2.445e+06	89.73	-0.21	-420.00	0.0	2.356e+05	9860.14	1.73	2701.38	-14.01	1.866e+06
		1.866e+06	-14.01	-1.37e-05	0.0	60.0	2.356e+05	9440.14	1.73	2701.38	89.73	2.445e+06
89	26	7.190e+05	-2695.65	-0.07	-420.00	0.0	7.513e+04	3047.87	-17.73	-2512.98	-2695.65	5.490e+05
		5.490e+05	-3635.63	1.16e-04	0.0	60.0	7.513e+04	2627.87	-17.73	-2512.98	-3635.63	7.190e+05
89	27	7.183e+05	3696.11	-0.07	-420.00	0.0	7.518e+04	3043.52	17.77	2477.15	2753.75	5.481e+05
		5.481e+05	2753.75	-1.16e-04	0.0	60.0	7.518e+04	2623.52	17.77	2477.15	3696.11	7.183e+05
89	46	7.197e+05	-830.20	-0.07	-420.00	0.0	7.507e+04	3053.09	-5.21	-730.67	-830.20	5.500e+05
		5.500e+05	-1105.67	3.43e-05	0.0	60.0	7.507e+04	2633.09	-5.21	-730.67	-1105.67	7.197e+05
89	50	7.197e+05	-677.62	-0.07	-420.00	0.0	7.507e+04	3053.09	-5.52	-704.84	-677.62	5.500e+05
		5.500e+05	-974.48	3.68e-05	0.0	60.0	7.507e+04	2633.09	-5.52	-704.84	-974.48	7.197e+05
89	51	7.176e+05	1034.96	-0.07	-420.00	0.0	7.524e+04	3038.31	5.56	669.02	735.72	5.470e+05
		5.470e+05	735.72	-3.73e-05	0.0	60.0	7.524e+04	2618.31	5.56	669.02	1034.96	7.176e+05
89	58	7.188e+05	-1002.01	-0.07	-420.00	0.0	7.514e+04	3046.53	-6.69	-970.09	-1002.01	5.487e+05
		5.487e+05	-1356.68	4.37e-05	0.0	60.0	7.514e+04	2626.53	-6.69	-970.09	-1356.68	7.188e+05
89	59	7.185e+05	1417.16	-0.07	-420.00	0.0	7.516e+04	3044.86	6.72	934.27	1060.11	5.483e+05
		5.483e+05	1060.11	-4.42e-05	0.0	60.0	7.516e+04	2624.86	6.72	934.27	1417.16	7.185e+05
89	78	7.191e+05	-296.17	-0.07	-420.00	0.0	7.512e+04	3048.53	-1.96	-289.98	-296.17	5.491e+05
		5.491e+05	-399.58	1.28e-05	0.0	60.0	7.512e+04	2628.53	-1.96	-289.98	-399.58	7.191e+05
89	82	7.191e+05	-238.56	-0.07	-420.00	0.0	7.512e+04	3048.53	-2.07	-280.33	-238.56	5.491e+05
		5.491e+05	-350.01	1.37e-05	0.0	60.0	7.512e+04	2628.53	-2.07	-280.33	-350.01	7.191e+05
89	83	7.182e+05	410.49	-0.07	-420.00	0.0	7.519e+04	3042.86	2.11	244.50	296.66	5.479e+05
		5.479e+05	296.66	-1.43e-05	0.0	60.0	7.519e+04	2622.86	2.11	244.50	410.49	7.182e+05
89	85	7.187e+05	30.24	-0.07	-420.00	0.0	7.515e+04	3045.70	0.02	-17.91	29.05	5.485e+05
		5.485e+05	29.05	0.0	0.0	60.0	7.515e+04	2625.70	0.02	-17.91	30.24	7.187e+05
89	87	1.875e+06	70.02	-0.16	-420.00	0.0	1.827e+05	7608.02	1.16	1797.60	0.37	1.431e+06
		1.431e+06	0.37	-9.20e-06	0.0	60.0	1.827e+05	7188.02	1.16	1797.60	70.02	1.875e+06
89	88	6.842e+05	29.56	-0.07	-420.00	0.0	7.157e+04	2910.16	0.01	-32.46	28.92	5.222e+05
		5.222e+05	28.92	0.0	0.0	60.0	7.157e+04	2490.16	0.01	-32.46	29.56	6.842e+05
89	89	1.870e+06	69.90	-0.16	-420.00	0.0	1.821e+05	7588.66	1.16	1794.95	0.34	1.427e+06
		1.427e+06	0.34	-9.19e-06	0.0	60.0	1.821e+05	7168.66	1.16	1794.95	69.90	1.870e+06
89	97	1.785e+06	66.54	-0.16	-420.00	0.0	1.747e+05	7256.34	1.05	1626.75	3.33	1.363e+06
		1.363e+06	3.33	-8.33e-06	0.0	60.0	1.747e+05	6836.34	1.05	1626.75	66.54	1.785e+06
89	98	7.162e+05	30.18	-0.07	-420.00	0.0	7.490e+04	3036.02	0.02	-19.24	29.04	5.466e+05
		5.466e+05	29.04	0.0	0.0	60.0	7.490e+04	2616.02	0.02	-19.24	30.18	7.162e+05
89	102	7.187e+05	30.24	-0.07	-420.00	0.0	7.515e+04	3045.70	0.02	-17.91	29.05	5.485e+05
		5.485e+05	29.05	0.0	0.0	60.0	7.515e+04	2625.70	0.02	-17.91	30.24	7.187e+05
90	2	2.728e+06	208.94	-0.16	-546.00	0.0	2.720e+05	6296.68	1.83	2545.87	98.98	2.366e+06
		2.366e+06	98.98	-1.42e-05	0.0	60.0	2.720e+05	5750.68	1.83	2545.87	208.94	2.728e+06
90	7	6.975e+05	29.22	-0.05	-420.00	0.0	7.331e+04	2087.88	-0.03	-49.95	29.22	5.848e+05
		5.848e+05	27.50	0.0	0.0	60.0	7.331e+04	1667.88	-0.03	-49.95	27.50	6.975e+05
90	26	7.516e+05	-3635.63	-0.05	-420.00	0.0	7.895e+04	2236.37	-14.01	-2160.15	-3635.63	6.305e+05
		6.305e+05	-4388.25	8.46e-05	0.0	60.0	7.895e+04	1816.37	-14.01	-2160.15	-4388.25	7.516e+05
90	27	7.512e+05	4446.93	-0.05	-420.00	0.0	7.899e+04	2229.51	13.98	2099.76	3696.10	6.296e+05
		6.296e+05	3696.10	-8.47e-05	0.0	60.0	7.899e+04	1809.51	13.98	2099.76	4446.93	7.512e+05
90	45	7.507e+05	-1026.23	-0.05	-420.00	0.0	7.903e+04	2221.37	-4.41	-736.61	-1026.23	6.287e+05
		6.287e+05	-1264.24	2.58e-05	0.0	60.0	7.903e+04	1801.37	-4.41	-736.61	-1264.24	7.507e+05
90	48	7.521e+05	1322.92	-0.05	-420.00	0.0	7.890e+04	2244.51	4.38	676.22	1086.70	6.314e+05
		6.314e+05	1086.70	-2.60e-05	0.0	60.0	7.890e+04	1824.51	4.38	676.22	1322.92	7.521e+05
90	51	7.507e+05	1286.15	-0.05	-420.00	0.0	7.903e+04	2221.40	4.52	514.21	1034.95	6.287e+05
		6.287e+05	1034.95	-2.89e-05	0.0	60.0	7.903e+04	1801.40	4.52	514.21	1286.15	7.507e+05

Trave	Cmb	M3 mx/mn	M2 mx/mn	D 2 / D 3	Q 2 / Q 3	Pos.	N	V 2	V 3	T	M 2	M 3
90	58	7.515e+05	-1356.68	-0.05	-420.00	0.0	7.896e+04	2234.26	-5.30	-840.58	-1356.68	6.302e+05
		6.302e+05	-1641.62	3.19e-05	0.0	60.0	7.896e+04	1814.26	-5.30	-840.58	-1641.62	7.515e+05
90	59	7.513e+05	1700.30	-0.05	-420.00	0.0	7.897e+04	2231.63	5.27	780.19	1417.16	6.299e+05
		6.299e+05	1417.16	-3.21e-05	0.0	60.0	7.897e+04	1811.63	5.27	780.19	1700.30	7.513e+05
90	77	7.512e+05	-369.39	-0.05	-420.00	0.0	7.899e+04	2228.50	-1.67	-298.93	-369.39	6.295e+05
		6.295e+05	-459.90	9.70e-06	0.0	60.0	7.899e+04	1808.50	-1.67	-298.93	-459.90	7.512e+05
90	80	7.517e+05	518.58	-0.05	-420.00	0.0	7.894e+04	2237.38	1.64	238.54	429.86	6.306e+05
		6.306e+05	429.86	-9.87e-06	0.0	60.0	7.894e+04	1817.38	1.64	238.54	518.58	7.517e+05
90	83	7.512e+05	504.81	-0.05	-420.00	0.0	7.899e+04	2228.52	1.70	177.18	410.49	6.295e+05
		6.295e+05	410.49	-1.10e-05	0.0	60.0	7.899e+04	1808.52	1.70	177.18	504.81	7.512e+05
90	85	7.514e+05	30.24	-0.05	-420.00	0.0	7.897e+04	2232.94	-0.01	-30.20	30.24	6.300e+05
		6.300e+05	29.34	0.0	0.0	60.0	7.897e+04	1812.94	-0.01	-30.20	29.34	7.514e+05
90	87	1.919e+06	143.21	-0.11	-420.00	0.0	1.919e+05	4495.51	1.22	1693.22	70.02	1.661e+06
		1.661e+06	70.02	-9.48e-06	0.0	60.0	1.919e+05	4075.51	1.22	1693.22	143.21	1.919e+06
90	88	7.154e+05	29.56	-0.05	-420.00	0.0	7.520e+04	2136.23	-0.02	-43.37	29.56	5.999e+05
		5.999e+05	28.12	0.0	0.0	60.0	7.520e+04	1716.23	-0.02	-43.37	28.12	7.154e+05
90	97	1.830e+06	132.72	-0.11	-420.00	0.0	1.835e+05	4343.86	1.10	1530.58	66.54	1.582e+06
		1.582e+06	66.54	-8.56e-06	0.0	60.0	1.835e+05	3923.86	1.10	1530.58	132.72	1.830e+06
90	98	7.489e+05	30.18	-0.05	-420.00	0.0	7.870e+04	2226.03	-0.02	-31.39	30.18	6.279e+05
		6.279e+05	29.23	0.0	0.0	60.0	7.870e+04	1806.03	-0.02	-31.39	29.23	7.489e+05
90	102	7.514e+05	30.24	-0.05	-420.00	0.0	7.897e+04	2232.94	-0.01	-30.20	30.24	6.300e+05
		6.300e+05	29.34	0.0	0.0	60.0	7.897e+04	1812.94	-0.01	-30.20	29.34	7.514e+05
91	2	2.673e+06	341.77	-0.09	-546.00	0.0	2.782e+05	1802.60	2.21	2309.83	208.94	2.582e+06
		2.582e+06	208.94	-1.44e-05	0.0	60.0	2.782e+05	1256.60	2.21	2309.83	341.77	2.673e+06
91	7	7.102e+05	27.50	-0.03	-420.00	0.0	7.567e+04	1335.77	-0.07	-57.90	27.50	6.427e+05
		6.427e+05	23.57	0.0	0.0	60.0	7.567e+04	915.77	-0.07	-57.90	23.57	7.102e+05
91	26	7.652e+05	-4388.25	-0.03	-420.00	0.0	8.149e+04	1427.13	-8.70	-1511.05	-4388.25	6.927e+05
		6.927e+05	-4848.96	4.88e-05	0.0	60.0	8.149e+04	1007.13	-8.70	-1511.05	-4848.96	7.652e+05
91	27	7.651e+05	4901.68	-0.03	-420.00	0.0	8.152e+04	1418.40	8.60	1428.99	4446.92	6.921e+05
		6.921e+05	4446.92	-4.86e-05	0.0	60.0	8.152e+04	998.40	8.60	1428.99	4901.68	7.651e+05
91	46	7.654e+05	-1322.40	-0.03	-420.00	0.0	8.146e+04	1437.34	-2.44	-410.77	-1322.40	6.935e+05
		6.935e+05	-1450.20	1.42e-05	0.0	60.0	8.146e+04	1017.34	-2.44	-410.77	-1450.20	7.654e+05
91	47	7.649e+05	1502.93	-0.03	-420.00	0.0	8.155e+04	1408.19	2.34	328.71	1381.08	6.913e+05
		6.913e+05	1381.08	-1.40e-05	0.0	60.0	8.155e+04	988.19	2.34	328.71	1502.93	7.649e+05
91	52	7.654e+05	1422.54	-0.03	-420.00	0.0	8.146e+04	1437.35	3.42	439.09	1227.99	6.935e+05
		6.935e+05	1227.99	-1.99e-05	0.0	60.0	8.146e+04	1017.35	3.42	439.09	1422.54	7.654e+05
91	58	7.652e+05	-1641.62	-0.03	-420.00	0.0	8.150e+04	1424.44	-3.31	-599.35	-1641.62	6.925e+05
		6.925e+05	-1817.47	1.85e-05	0.0	60.0	8.150e+04	1004.44	-3.31	-599.35	-1817.47	7.652e+05
91	59	7.651e+05	1870.19	-0.03	-420.00	0.0	8.151e+04	1421.09	3.21	517.29	1700.30	6.923e+05
		6.923e+05	1700.30	-1.83e-05	0.0	60.0	8.151e+04	1001.09	3.21	517.29	1870.19	7.651e+05
91	78	7.652e+05	-482.01	-0.03	-420.00	0.0	8.149e+04	1428.35	-0.95	-181.44	-482.01	6.928e+05
		6.928e+05	-532.10	5.41e-06	0.0	60.0	8.149e+04	1008.35	-0.95	-181.44	-532.10	7.652e+05
91	79	7.651e+05	584.82	-0.03	-420.00	0.0	8.152e+04	1417.18	0.85	99.38	540.68	6.920e+05
		6.920e+05	540.68	-5.24e-06	0.0	60.0	8.152e+04	997.18	0.85	99.38	584.82	7.651e+05
91	84	7.652e+05	554.37	-0.03	-420.00	0.0	8.149e+04	1428.36	1.26	141.55	482.70	6.928e+05
		6.928e+05	482.70	-7.47e-06	0.0	60.0	8.149e+04	1008.36	1.26	141.55	554.37	7.652e+05
91	85	7.651e+05	29.34	-0.03	-420.00	0.0	8.150e+04	1422.76	-0.05	-41.03	29.34	6.924e+05
		6.924e+05	26.36	0.0	0.0	60.0	8.150e+04	1002.76	-0.05	-41.03	26.36	7.651e+05
91	87	1.884e+06	231.36	-0.06	-420.00	0.0	1.963e+05	1391.44	1.47	1534.42	143.21	1.813e+06
		1.813e+06	143.21	-9.58e-06	0.0	60.0	1.963e+05	971.44	1.47	1534.42	231.36	1.884e+06
91	88	7.285e+05	28.12	-0.03	-420.00	0.0	7.761e+04	1364.77	-0.06	-52.28	28.12	6.592e+05
		6.592e+05	24.50	0.0	0.0	60.0	7.761e+04	944.77	-0.06	-52.28	24.50	7.285e+05
91	97	1.801e+06	212.23	-0.06	-420.00	0.0	1.879e+05	1439.31	1.33	1385.15	132.72	1.727e+06
		1.727e+06	132.72	-8.64e-06	0.0	60.0	1.879e+05	1019.31	1.33	1385.15	212.23	1.801e+06
91	98	7.625e+05	29.23	-0.03	-420.00	0.0	8.123e+04	1418.62	-0.05	-42.05	29.23	6.900e+05
		6.900e+05	26.19	0.0	0.0	60.0	8.123e+04	998.62	-0.05	-42.05	26.19	7.625e+05
91	102	7.651e+05	29.34	-0.03	-420.00	0.0	8.150e+04	1422.76	-0.05	-41.03	29.34	6.924e+05
		6.924e+05	26.36	0.0	0.0	60.0	8.150e+04	1002.76	-0.05	-41.03	26.36	7.651e+05
92	2	2.673e+06	511.32	-0.02	-546.00	0.0	2.781e+05	-2105.33	2.83	1987.50	341.76	2.673e+06
		2.530e+06	341.76	-1.41e-05	0.0	60.0	2.781e+05	-2651.33	2.83	1987.50	511.32	2.530e+06
92	7	7.053e+05	23.57	-9.82e-03	-420.00	0.0	7.685e+04	585.24	-0.10	-62.34	23.57	6.828e+05
		6.828e+05	17.32	0.0	0.0	60.0	7.685e+04	165.24	-0.10	-62.34	17.32	7.053e+05
92	22	7.600e+05	-4839.75	-0.01	-420.00	0.0	8.277e+04	619.08	2.39	-738.20	-4839.75	7.354e+05
		7.354e+05	-4954.20	1.24e-05	0.0	60.0	8.277e+04	199.08	2.39	-738.20	-4954.20	7.600e+05
92	23	7.598e+05	4996.77	-0.01	-420.00	0.0	8.278e+04	609.47	-2.56	639.82	4892.47	7.358e+05
		7.358e+05	4892.47	-1.20e-05	0.0	60.0	8.278e+04	189.47	-2.56	639.82	4996.77	7.598e+05
92	46	7.601e+05	-1450.20	-0.01	-420.00	0.0	8.276e+04	630.42	0.94	-161.09	-1450.20	7.349e+05
		7.349e+05	-1470.91	3.34e-06	0.0	60.0	8.276e+04	210.42	0.94	-161.09	-1470.91	7.601e+05
92	50	7.601e+05	-1400.53	-0.01	-420.00	0.0	8.276e+04	630.43	-1.24	-118.56	-1400.53	7.349e+05
		7.349e+05	-1470.87	8.07e-06	0.0	60.0	8.276e+04	210.43	-1.24	-118.56	-1470.87	7.601e+05
92	51	7.596e+05	1513.44	-0.01	-420.00	0.0	8.279e+04	598.12	1.07	20.18	1453.25	7.363e+05
		7.363e+05	1453.25	-7.56e-06	0.0	60.0	8.279e+04	178.12	1.07	20.18	1513.44	7.596e+05
92	52	7.601e+05	1514.27	-0.01	-420.00	0.0	8.276e+04	630.43	1.58	194.14	1422.54	7.349e+05
		7.349e+05	1422.54	-8.81e-06	0.0	60.0	8.276e+04	210.43	1.58	194.14	1514.27	7.601e+05
92	54	7.599e+05	-1813.97	-0.01	-420.00	0.0	8.277e+04	616.12	0.85	-310.58	-1813.97	7.355e+05

Trave	Cmb	M3 mx/mn	M2 mx/mn	D 2 / D 3	Q 2 / Q 3	Pos.	N	V 2	V 3	T	M 2	M 3
		7.355e+05	-1860.33	4.79e-06	0.0	60.0	8.277e+04	196.12	0.85	-310.58	-1860.33	7.599e+05
92	55	7.599e+05	1902.90	-0.01	-420.00	0.0	8.278e+04	612.43	-1.02	212.20	1866.69	7.357e+05
		7.357e+05	1866.69	-4.44e-06	0.0	60.0	8.278e+04	192.43	-1.02	212.20	1902.90	7.599e+05
92	78	7.600e+05	-532.10	-0.01	-420.00	0.0	8.277e+04	620.47	0.30	-91.58	-532.10	7.354e+05
		7.354e+05	-543.03	1.37e-06	0.0	60.0	8.277e+04	200.47	0.30	-91.58	-543.03	7.600e+05
92	82	7.600e+05	-513.32	-0.01	-420.00	0.0	8.277e+04	620.47	-0.52	-75.61	-513.32	7.354e+05
		7.354e+05	-543.02	3.21e-06	0.0	60.0	8.277e+04	200.47	-0.52	-75.61	-543.02	7.600e+05
92	83	7.598e+05	585.59	-0.01	-420.00	0.0	8.278e+04	608.08	0.35	-22.77	566.04	7.359e+05
		7.359e+05	566.04	-2.69e-06	0.0	60.0	8.278e+04	188.08	0.35	-22.77	585.59	7.598e+05
92	84	7.600e+05	585.90	-0.01	-420.00	0.0	8.277e+04	620.47	0.55	43.34	554.37	7.354e+05
		7.354e+05	554.37	-3.17e-06	0.0	60.0	8.277e+04	200.47	0.55	43.34	585.90	7.600e+05
92	85	7.599e+05	26.36	-0.01	-420.00	0.0	8.277e+04	614.27	-0.08	-49.19	26.36	7.356e+05
		7.356e+05	21.28	0.0	0.0	60.0	8.277e+04	194.27	-0.08	-49.19	21.28	7.599e+05
92	87	1.880e+06	343.72	-0.01	-420.00	0.0	1.964e+05	-1321.65	1.87	1318.44	231.36	1.880e+06
		1.788e+06	231.36	-9.39e-06	0.0	60.0	1.964e+05	-1741.65	1.87	1318.44	343.72	1.788e+06
92	88	7.235e+05	24.50	-0.01	-420.00	0.0	7.882e+04	594.92	-0.10	-57.96	24.50	7.004e+05
		7.004e+05	18.64	0.0	0.0	60.0	7.882e+04	174.92	-0.10	-57.96	18.64	7.235e+05
92	97	1.793e+06	313.43	-0.01	-420.00	0.0	1.881e+05	-1113.13	1.69	1188.13	212.23	1.793e+06
		1.714e+06	212.23	-8.46e-06	0.0	60.0	1.881e+05	-1533.13	1.69	1188.13	313.43	1.714e+06
92	98	7.573e+05	26.19	-0.01	-420.00	0.0	8.249e+04	612.89	-0.09	-49.99	26.19	7.331e+05
		7.331e+05	21.04	0.0	0.0	60.0	8.249e+04	192.89	-0.09	-49.99	21.04	7.573e+05
92	102	7.599e+05	26.36	-0.01	-420.00	0.0	8.277e+04	614.27	-0.08	-49.19	26.36	7.356e+05
		7.356e+05	21.28	0.0	0.0	60.0	8.277e+04	194.27	-0.08	-49.19	21.28	7.599e+05
93	2	2.655e+06	727.18	0.06	-546.00	0.0	2.725e+05	-5091.47	3.60	1566.37	511.32	2.655e+06
		2.333e+06	511.32	-1.32e-05	0.0	60.0	2.725e+05	-5637.47	3.60	1566.37	727.18	2.333e+06
93	7	7.053e+05	17.32	9.81e-03	-420.00	0.0	7.685e+04	-164.77	-0.14	-62.05	17.32	7.053e+05
		6.828e+05	8.71	0.0	0.0	60.0	7.685e+04	-584.77	-0.14	-62.05	8.71	6.828e+05
93	18	2.647e+06	727.18	0.06	-546.00	0.0	2.717e+05	-5087.33	3.60	1566.37	511.32	2.647e+06
		2.325e+06	511.32	-1.32e-05	0.0	60.0	2.717e+05	-5633.33	3.60	1566.37	727.18	2.325e+06
93	21	7.600e+05	-4686.41	0.01	-420.00	0.0	8.277e+04	-198.57	4.66	493.05	-4954.20	7.600e+05
		7.354e+05	-4954.20	-2.79e-05	0.0	60.0	8.277e+04	-618.57	4.66	493.05	-4686.41	7.354e+05
93	24	7.598e+05	4996.77	0.01	-420.00	0.0	8.278e+04	-188.77	-4.90	-600.06	4996.77	7.598e+05
		7.359e+05	4714.60	2.87e-05	0.0	60.0	8.278e+04	-608.77	-4.90	-600.06	4714.60	7.359e+05
93	45	7.601e+05	-1412.78	0.01	-420.00	0.0	8.276e+04	-209.84	1.03	15.65	-1470.91	7.601e+05
		7.349e+05	-1470.91	-7.38e-06	0.0	60.0	8.276e+04	-629.84	1.03	15.65	-1412.78	7.349e+05
93	49	7.601e+05	-1462.41	0.01	-420.00	0.0	8.276e+04	-209.84	-1.14	58.24	-1470.87	7.601e+05
		7.349e+05	-1470.87	-2.08e-06	0.0	60.0	8.276e+04	-629.84	-1.14	58.24	-1462.41	7.349e+05
93	51	7.601e+05	1514.27	0.01	-420.00	0.0	8.276e+04	-209.81	0.39	-339.23	1514.27	7.601e+05
		7.349e+05	1459.92	4.20e-06	0.0	60.0	8.276e+04	-629.81	0.39	-339.23	1459.92	7.349e+05
93	52	7.596e+05	1513.44	0.01	-420.00	0.0	8.279e+04	-177.50	0.90	-165.26	1513.44	7.596e+05
		7.364e+05	1490.60	2.92e-06	0.0	60.0	8.279e+04	-597.50	0.90	-165.26	1490.60	7.364e+05
93	53	7.599e+05	-1763.63	0.01	-420.00	0.0	8.277e+04	-195.55	1.69	154.41	-1860.33	7.599e+05
		7.356e+05	-1860.33	-1.03e-05	0.0	60.0	8.277e+04	-615.55	1.69	154.41	-1763.63	7.356e+05
93	56	7.598e+05	1902.90	0.01	-420.00	0.0	8.278e+04	-191.79	-1.93	-261.42	1902.90	7.598e+05
		7.357e+05	1791.81	1.11e-05	0.0	60.0	8.278e+04	-611.79	-1.93	-261.42	1791.81	7.357e+05
93	77	7.600e+05	-525.58	0.01	-420.00	0.0	8.277e+04	-199.87	0.32	-27.16	-543.03	7.600e+05
		7.354e+05	-543.03	-2.53e-06	0.0	60.0	8.277e+04	-619.87	0.32	-27.16	-525.58	7.354e+05
93	81	7.600e+05	-543.02	0.01	-420.00	0.0	8.277e+04	-199.87	-0.50	-11.17	-543.02	7.600e+05
		7.354e+05	-544.34	0.0	0.0	60.0	8.277e+04	-619.87	-0.50	-11.17	-544.34	7.354e+05
93	83	7.600e+05	585.90	0.01	-420.00	0.0	8.277e+04	-199.86	0.07	-161.96	585.90	7.600e+05
		7.354e+05	560.87	1.85e-06	0.0	60.0	8.277e+04	-619.86	0.07	-161.96	560.87	7.354e+05
93	84	7.598e+05	585.59	0.01	-420.00	0.0	8.278e+04	-187.47	0.27	-95.84	585.59	7.598e+05
		7.359e+05	572.53	1.36e-06	0.0	60.0	8.278e+04	-607.47	0.27	-95.84	572.53	7.359e+05
93	85	7.599e+05	21.28	0.01	-420.00	0.0	8.277e+04	-193.67	-0.12	-53.51	21.28	7.599e+05
		7.357e+05	14.09	0.0	0.0	60.0	8.277e+04	-613.67	-0.12	-53.51	14.09	7.357e+05
93	87	1.871e+06	486.67	0.04	-420.00	0.0	1.927e+05	-3420.14	2.38	1037.11	343.72	1.871e+06
		1.653e+06	343.72	-8.75e-06	0.0	60.0	1.927e+05	-3840.14	2.38	1037.11	486.67	1.653e+06
93	88	7.235e+05	18.64	0.01	-420.00	0.0	7.882e+04	-174.40	-0.14	-59.20	18.64	7.235e+05
		7.004e+05	10.50	0.0	0.0	60.0	7.882e+04	-594.40	-0.14	-59.20	10.50	7.004e+05
93	95	1.866e+06	486.67	0.04	-420.00	0.0	1.922e+05	-3417.38	2.38	1037.11	343.72	1.866e+06
		1.648e+06	343.72	-8.75e-06	0.0	60.0	1.922e+05	-3837.38	2.38	1037.11	486.67	1.648e+06
93	97	1.788e+06	442.05	0.04	-420.00	0.0	1.848e+05	-3112.35	2.14	932.24	313.42	1.788e+06
		1.589e+06	313.42	-7.87e-06	0.0	60.0	1.848e+05	-3532.35	2.14	932.24	442.05	1.589e+06
93	98	7.573e+05	21.04	0.01	-420.00	0.0	8.249e+04	-192.29	-0.12	-54.03	21.04	7.573e+05
		7.331e+05	13.77	0.0	0.0	60.0	8.249e+04	-612.29	-0.12	-54.03	13.77	7.331e+05
93	102	7.599e+05	21.28	0.01	-420.00	0.0	8.277e+04	-193.67	-0.12	-53.51	21.28	7.599e+05
		7.357e+05	14.09	0.0	0.0	60.0	8.277e+04	-613.67	-0.12	-53.51	14.09	7.357e+05
94	2	2.556e+06	992.57	0.13	-546.00	0.0	2.628e+05	-7354.58	4.42	1029.41	727.18	2.556e+06
		2.099e+06	727.18	-1.13e-05	0.0	60.0	2.628e+05	-7900.58	4.42	1029.41	992.57	2.099e+06
94	7	7.102e+05	8.71	0.03	-420.00	0.0	7.567e+04	-915.35	-0.18	-55.94	8.71	7.102e+05
		6.427e+05	-2.16	0.0	0.0	60.0	7.567e+04	-1335.35	-0.18	-55.94	-2.16	6.427e+05
94	18	2.548e+06	992.57	0.13	-546.00	0.0	2.620e+05	-7342.17	4.42	1029.41	727.18	2.548e+06
		2.091e+06	727.18	-1.13e-05	0.0	60.0	2.620e+05	-7888.17	4.42	1029.41	992.57	2.091e+06
94	30	7.651e+05	-4412.60	0.03	-420.00	0.0	8.152e+04	-997.92	8.49	1416.84	-4861.07	7.651e+05
		6.921e+05	-4861.07	-4.81e-05	0.0	60.0	8.152e+04	-1417.92	8.49	1416.84	-4412.60	6.921e+05

Trave	Cmb	M3 mx/mn	M2 mx/mn	D 2 / D 3	Q 2 / Q 3	Pos.	N	V 2	V 3	T	M 2	M 3
94	31	7.652e+05	4889.26	0.03	-420.00	0.0	8.149e+04	-1006.55	-8.80	-1522.76	4889.26	7.652e+05
		6.928e+05	4422.30	4.92e-05	0.0	60.0	8.149e+04	-1426.55	-8.80	-1522.76	4422.30	6.928e+05
94	43	7.654e+05	1490.61	0.03	-420.00	0.0	8.146e+04	-1016.79	-2.54	-422.67	1490.61	7.654e+05
		6.935e+05	1356.54	1.46e-05	0.0	60.0	8.146e+04	-1436.79	-2.54	-422.67	1356.54	6.935e+05
94	45	7.654e+05	-1251.91	0.03	-420.00	0.0	8.146e+04	-1016.82	2.86	270.47	-1412.78	7.654e+05
		6.935e+05	-1412.78	-1.83e-05	0.0	60.0	8.146e+04	-1436.82	2.86	270.47	-1251.91	6.935e+05
94	48	7.649e+05	1440.97	0.03	-420.00	0.0	8.155e+04	-987.65	-3.16	-376.38	1440.97	7.649e+05
		6.913e+05	1261.62	1.94e-05	0.0	60.0	8.155e+04	-1407.65	-3.16	-376.38	1261.62	6.913e+05
94	50	7.649e+05	-1288.69	0.03	-420.00	0.0	8.155e+04	-987.68	2.69	473.36	-1431.73	7.649e+05
		6.913e+05	-1431.73	-1.47e-05	0.0	60.0	8.155e+04	-1407.68	2.69	473.36	-1288.69	6.913e+05
94	62	7.651e+05	-1666.05	0.03	-420.00	0.0	8.151e+04	-1000.58	3.11	505.28	-1829.67	7.651e+05
		6.923e+05	-1829.67	-1.78e-05	0.0	60.0	8.151e+04	-1420.58	3.11	505.28	-1666.05	6.923e+05
94	63	7.652e+05	1857.86	0.03	-420.00	0.0	8.150e+04	-1003.89	-3.42	-611.19	1857.86	7.652e+05
		6.926e+05	1675.76	1.90e-05	0.0	60.0	8.150e+04	-1423.89	-3.42	-611.19	1675.76	6.926e+05
94	75	7.653e+05	572.53	0.03	-420.00	0.0	8.149e+04	-1007.82	-1.05	-193.36	572.53	7.653e+05
		6.929e+05	516.18	5.88e-06	0.0	60.0	8.149e+04	-1427.82	-1.05	-193.36	516.18	6.929e+05
94	77	7.653e+05	-470.60	0.03	-420.00	0.0	8.149e+04	-1007.83	0.98	70.08	-525.58	7.653e+05
		6.929e+05	-525.58	-6.57e-06	0.0	60.0	8.149e+04	-1427.83	0.98	70.08	-470.60	6.929e+05
94	80	7.651e+05	553.77	0.03	-420.00	0.0	8.152e+04	-996.64	-1.29	-175.99	553.77	7.651e+05
		6.920e+05	480.30	7.68e-06	0.0	60.0	8.152e+04	-1416.64	-1.29	-175.99	480.30	6.920e+05
94	82	7.651e+05	-484.37	0.03	-420.00	0.0	8.152e+04	-996.65	0.92	146.96	-532.68	7.651e+05
		6.920e+05	-532.68	-5.20e-06	0.0	60.0	8.152e+04	-1416.65	0.92	146.96	-484.37	6.920e+05
94	85	7.652e+05	14.09	0.03	-420.00	0.0	8.151e+04	-1002.24	-0.15	-52.96	14.09	7.652e+05
		6.924e+05	4.85	0.0	0.0	60.0	8.151e+04	-1422.24	-0.15	-52.96	4.85	6.924e+05
94	87	1.806e+06	662.36	0.09	-420.00	0.0	1.861e+05	-5036.69	2.93	679.21	486.67	1.806e+06
		1.491e+06	486.67	-7.49e-06	0.0	60.0	1.861e+05	-5456.69	2.93	679.21	662.36	1.491e+06
94	88	7.285e+05	10.50	0.03	-420.00	0.0	7.762e+04	-944.31	-0.17	-54.95	10.50	7.285e+05
		6.593e+05	0.18	0.0	0.0	60.0	7.762e+04	-1364.31	-0.17	-54.95	0.18	6.593e+05
94	95	1.801e+06	662.36	0.09	-420.00	0.0	1.855e+05	-5028.41	2.93	679.21	486.67	1.801e+06
		1.487e+06	486.67	-7.49e-06	0.0	60.0	1.855e+05	-5448.41	2.93	679.21	662.36	1.487e+06
94	97	1.730e+06	600.05	0.08	-420.00	0.0	1.786e+05	-4677.92	2.63	607.46	442.05	1.730e+06
		1.437e+06	442.05	-6.72e-06	0.0	60.0	1.786e+05	-5097.92	2.63	607.46	600.05	1.437e+06
94	98	7.625e+05	13.77	0.03	-420.00	0.0	8.123e+04	-998.10	-0.16	-53.14	13.77	7.625e+05
		6.901e+05	4.43	0.0	0.0	60.0	8.123e+04	-1418.10	-0.16	-53.14	4.43	6.901e+05
94	102	7.652e+05	14.09	0.03	-420.00	0.0	8.151e+04	-1002.24	-0.15	-52.96	14.09	7.652e+05
		6.924e+05	4.85	0.0	0.0	60.0	8.151e+04	-1422.24	-0.15	-52.96	4.85	6.924e+05
95	2	2.402e+06	1300.22	0.19	-546.00	0.0	2.497e+05	-9259.80	5.13	360.08	992.57	2.402e+06
		1.830e+06	992.57	-8.20e-06	0.0	60.0	2.497e+05	-9805.80	5.13	360.08	1300.22	1.830e+06
95	5	9.229e+05	-0.70	0.06	-546.00	0.0	9.700e+04	-2211.35	-0.27	-57.43	-0.70	9.229e+05
		7.739e+05	-16.67	0.0	0.0	60.0	9.700e+04	-2757.35	-0.27	-57.43	-16.67	7.739e+05
95	7	6.975e+05	-2.16	0.05	-420.00	0.0	7.331e+04	-1667.58	-0.21	-43.37	-2.16	6.975e+05
		5.848e+05	-14.83	0.0	0.0	60.0	7.331e+04	-2087.58	-0.21	-43.37	-14.83	5.848e+05
95	20	2.169e+06	1302.06	0.17	-420.00	0.0	2.252e+05	-8695.33	5.18	374.14	991.12	2.169e+06
		1.635e+06	991.12	-8.40e-06	0.0	60.0	2.252e+05	-9115.33	5.18	374.14	1302.06	1.635e+06
95	33	7.517e+05	-3672.04	0.05	-420.00	0.0	7.895e+04	-1816.06	13.81	2083.45	-4412.60	7.517e+05
		6.305e+05	-4412.60	-8.40e-05	0.0	60.0	7.895e+04	-2236.06	13.81	2083.45	-3672.04	6.305e+05
95	36	7.513e+05	4422.31	0.05	-420.00	0.0	7.899e+04	-1809.07	-14.18	-2177.15	4422.31	7.513e+05
		6.297e+05	3659.77	8.53e-05	0.0	60.0	7.899e+04	-2229.07	-14.18	-2177.15	3659.77	6.297e+05
95	45	7.521e+05	-1010.82	0.05	-420.00	0.0	7.890e+04	-1824.13	4.35	497.67	-1251.91	7.521e+05
		6.315e+05	-1251.91	-2.81e-05	0.0	60.0	7.890e+04	-2244.13	4.35	497.67	-1010.82	6.315e+05
95	47	7.521e+05	1203.46	0.05	-420.00	0.0	7.890e+04	-1824.12	-5.07	-715.13	1203.46	7.521e+05
		6.315e+05	919.11	3.03e-05	0.0	60.0	7.890e+04	-2244.12	-5.07	-715.13	919.11	6.315e+05
95	48	7.508e+05	1261.62	0.05	-420.00	0.0	7.903e+04	-1801.01	-4.72	-591.37	1261.62	7.508e+05
		6.287e+05	998.56	2.94e-05	0.0	60.0	7.903e+04	-2221.01	-4.72	-591.37	998.56	6.287e+05
95	50	7.508e+05	-1062.61	0.05	-420.00	0.0	7.903e+04	-1801.02	4.21	659.69	-1288.69	7.508e+05
		6.287e+05	-1288.69	-2.52e-05	0.0	60.0	7.903e+04	-2221.02	4.21	659.69	-1062.61	6.287e+05
95	65	7.515e+05	-1393.07	0.05	-420.00	0.0	7.896e+04	-1813.91	5.10	763.66	-1666.06	7.515e+05
		6.303e+05	-1666.06	-3.13e-05	0.0	60.0	7.896e+04	-2233.91	5.10	763.66	-1393.07	6.303e+05
95	68	7.514e+05	1675.76	0.05	-420.00	0.0	7.897e+04	-1811.23	-5.47	-857.36	1675.76	7.514e+05
		6.300e+05	1380.80	3.27e-05	0.0	60.0	7.897e+04	-2231.23	-5.47	-857.36	1380.80	6.300e+05
95	77	7.517e+05	-386.37	0.05	-420.00	0.0	7.894e+04	-1817.00	1.53	160.57	-470.60	7.517e+05
		6.306e+05	-470.60	-1.02e-05	0.0	60.0	7.894e+04	-2237.00	1.53	160.57	-386.37	6.306e+05
95	79	7.517e+05	458.20	0.05	-420.00	0.0	7.894e+04	-1817.00	-2.03	-301.30	458.20	7.517e+05
		6.306e+05	343.91	1.19e-05	0.0	60.0	7.894e+04	-2237.00	-2.03	-301.30	343.91	6.306e+05
95	80	7.512e+05	480.30	0.05	-420.00	0.0	7.899e+04	-1808.13	-1.90	-254.27	480.30	7.512e+05
		6.296e+05	374.11	1.15e-05	0.0	60.0	7.899e+04	-2228.13	-1.90	-254.27	374.11	6.296e+05
95	82	7.512e+05	-405.76	0.05	-420.00	0.0	7.899e+04	-1808.14	1.48	221.93	-484.38	7.512e+05
		6.296e+05	-484.38	-9.13e-06	0.0	60.0	7.899e+04	-2228.14	1.48	221.93	-405.76	6.296e+05
95	85	7.515e+05	4.85	0.05	-420.00	0.0	7.897e+04	-1812.57	-0.18	-46.85	4.85	7.515e+05
		6.301e+05	-6.13	0.0	0.0	60.0	7.897e+04	-2232.57	-0.18	-46.85	-6.13	6.301e+05
95	87	1.702e+06	865.99	0.13	-420.00	0.0	1.770e+05	-6414.88	3.39	233.81	662.36	1.702e+06
		1.304e+06	662.36	-5.38e-06	0.0	60.0	1.770e+05	-6834.88	3.39	233.81	865.99	1.304e+06
95	88	7.155e+05	0.18	0.05	-420.00	0.0	7.520e+04	-1715.91	-0.20	-44.53	0.18	7.155e+05
		5.999e+05	-11.93	0.0	0.0	60.0	7.520e+04	-2135.91	-0.20	-44.53	-11.93	5.999e+05
95	95	1.696e+06	865.99	0.13	-420.00	0.0	1.764e+05	-6401.07	3.39	233.81	662.36	1.696e+06

Trave	Cmb	M3 mx/mn	M2 mx/mn	D 2 / D 3	Q 2 / Q 3	Pos.	N	V 2	V 3	T	M 2	M 3
		1.300e+06	662.36	-5.38e-06	0.0	60.0	1.764e+05	-6821.07	3.39	233.81	865.99	1.300e+06
95	97	1.634e+06	783.05	0.13	-420.00	0.0	1.701e+05	-6029.21	3.05	204.03	600.05	1.634e+06
		1.260e+06	600.05	-4.81e-06	0.0	60.0	1.701e+05	-6449.21	3.05	204.03	783.05	1.260e+06
95	98	7.489e+05	4.43	0.05	-420.00	0.0	7.870e+04	-1805.66	-0.18	-46.64	4.43	7.489e+05
		6.280e+05	-6.66	0.0	0.0	60.0	7.870e+04	-2225.66	-0.18	-46.64	-6.66	6.280e+05
95	102	7.515e+05	4.85	0.05	-420.00	0.0	7.897e+04	-1812.57	-0.18	-46.85	4.85	7.515e+05
		6.301e+05	-6.13	0.0	0.0	60.0	7.897e+04	-2232.57	-0.18	-46.85	-6.13	6.301e+05
96	2	2.203e+06	1621.79	0.25	-546.00	0.0	2.336e+05	-1.100e+04	5.36	-448.53	1300.22	2.203e+06
		1.526e+06	1300.22	-3.84e-06	0.0	60.0	2.336e+05	-1.155e+04	5.36	-448.53	1621.79	1.526e+06
96	5	8.827e+05	-16.67	0.09	-546.00	0.0	9.232e+04	-3209.96	-0.28	-35.24	-16.67	8.827e+05
		6.737e+05	-33.48	0.0	0.0	60.0	9.232e+04	-3755.96	-0.28	-35.24	-33.48	6.737e+05
96	7	6.671e+05	-14.83	0.07	-420.00	0.0	6.978e+04	-2422.29	-0.22	-24.66	-14.83	6.671e+05
		5.092e+05	-28.09	0.0	0.0	60.0	6.978e+04	-2842.29	-0.22	-24.66	-28.09	5.092e+05
96	20	1.980e+06	1627.18	0.22	-420.00	0.0	2.103e+05	-1.018e+04	5.42	-437.95	1302.06	1.980e+06
		1.356e+06	1302.06	-4.00e-06	0.0	60.0	2.103e+05	-1.060e+04	5.42	-437.95	1627.18	1.356e+06
96	33	7.190e+05	-2743.11	0.07	-420.00	0.0	7.513e+04	-2627.80	17.56	2460.53	-3672.04	7.190e+05
		5.490e+05	-3672.04	-1.15e-04	0.0	60.0	7.513e+04	-3047.80	17.56	2460.53	-2743.11	5.490e+05
96	36	7.184e+05	3659.78	0.07	-420.00	0.0	7.518e+04	-2623.32	-17.95	-2531.03	3659.78	7.184e+05
		5.481e+05	2707.19	1.17e-04	0.0	60.0	7.518e+04	-3043.32	-17.95	-2531.03	2707.19	5.481e+05
96	45	7.198e+05	-724.79	0.07	-420.00	0.0	7.507e+04	-2632.97	5.34	651.89	-1010.82	7.198e+05
		5.501e+05	-1010.82	-3.63e-05	0.0	60.0	7.507e+04	-3052.97	5.34	651.89	-724.79	5.501e+05
96	48	7.177e+05	998.56	0.07	-420.00	0.0	7.524e+04	-2618.15	-5.74	-722.39	998.56	7.177e+05
		5.471e+05	688.87	3.77e-05	0.0	60.0	7.524e+04	-3038.15	-5.74	-722.39	688.87	5.471e+05
96	50	7.177e+05	-785.38	0.07	-420.00	0.0	7.524e+04	-2618.16	5.24	756.35	-1062.61	7.177e+05
		5.471e+05	-1062.61	-3.44e-05	0.0	60.0	7.524e+04	-3038.16	5.24	756.35	-785.38	5.471e+05
96	51	7.198e+05	1050.34	0.07	-420.00	0.0	7.507e+04	-2632.96	-5.64	-826.85	1050.34	7.198e+05
		5.501e+05	749.46	3.59e-05	0.0	60.0	7.507e+04	-3052.96	-5.64	-826.85	749.46	5.501e+05
96	65	7.188e+05	-1049.19	0.07	-420.00	0.0	7.515e+04	-2626.42	6.51	917.19	-1393.07	7.188e+05
		5.488e+05	-1393.07	-4.32e-05	0.0	60.0	7.515e+04	-3046.42	6.51	917.19	-1049.19	5.488e+05
96	68	7.186e+05	1380.80	0.07	-420.00	0.0	7.517e+04	-2624.70	-6.90	-987.69	1380.80	7.186e+05
		5.484e+05	1013.27	4.46e-05	0.0	60.0	7.517e+04	-3044.70	-6.90	-987.69	1013.27	5.484e+05
96	77	7.191e+05	-285.63	0.07	-420.00	0.0	7.512e+04	-2628.40	1.90	227.24	-386.37	7.191e+05
		5.492e+05	-386.37	-1.33e-05	0.0	60.0	7.512e+04	-3048.40	1.90	227.24	-285.63	5.492e+05
96	80	7.183e+05	374.11	0.07	-420.00	0.0	7.519e+04	-2622.72	-2.29	-297.74	374.11	7.183e+05
		5.480e+05	249.71	1.47e-05	0.0	60.0	7.519e+04	-3042.72	-2.29	-297.74	249.71	5.480e+05
96	82	7.183e+05	-308.28	0.07	-420.00	0.0	7.519e+04	-2622.72	1.86	266.77	-405.76	7.183e+05
		5.480e+05	-405.76	-1.26e-05	0.0	60.0	7.519e+04	-3042.72	1.86	266.77	-308.28	5.480e+05
96	83	7.191e+05	393.49	0.07	-420.00	0.0	7.512e+04	-2628.40	-2.25	-337.27	393.49	7.191e+05
		5.492e+05	272.36	1.40e-05	0.0	60.0	7.512e+04	-3048.40	-2.25	-337.27	272.36	5.492e+05
96	85	7.187e+05	-6.13	0.07	-420.00	0.0	7.516e+04	-2625.56	-0.20	-35.25	-6.13	7.187e+05
		5.486e+05	-17.96	0.0	0.0	60.0	7.516e+04	-3045.56	-0.20	-35.25	-17.96	5.486e+05
96	87	1.564e+06	1078.80	0.17	-420.00	0.0	1.658e+05	-7682.75	3.55	-303.72	865.99	1.564e+06
		1.091e+06	865.99	-2.49e-06	0.0	60.0	1.658e+05	-8102.75	3.55	-303.72	1078.80	1.091e+06
96	88	6.843e+05	-11.93	0.07	-420.00	0.0	7.157e+04	-2490.05	-0.21	-28.19	-11.93	6.843e+05
		5.223e+05	-24.71	0.0	0.0	60.0	7.157e+04	-2910.05	-0.21	-28.19	-24.71	5.223e+05
96	95	1.559e+06	1078.80	0.17	-420.00	0.0	1.652e+05	-7663.40	3.55	-303.72	865.99	1.559e+06
		1.087e+06	865.99	-2.49e-06	0.0	60.0	1.652e+05	-8083.40	3.55	-303.72	1078.80	1.087e+06
96	97	1.506e+06	974.10	0.17	-420.00	0.0	1.595e+05	-7281.57	3.18	-282.07	783.05	1.506e+06
		1.057e+06	783.05	-2.21e-06	0.0	60.0	1.595e+05	-7701.57	3.18	-282.07	974.10	1.057e+06
96	98	7.163e+05	-6.66	0.07	-420.00	0.0	7.490e+04	-2615.88	-0.20	-34.61	-6.66	7.163e+05
		5.467e+05	-18.57	0.0	0.0	60.0	7.490e+04	-3035.88	-0.20	-34.61	-18.57	5.467e+05
96	102	7.187e+05	-6.13	0.07	-420.00	0.0	7.516e+04	-2625.56	-0.20	-35.25	-6.13	7.187e+05
		5.486e+05	-17.96	0.0	0.0	60.0	7.516e+04	-3045.56	-0.20	-35.25	-17.96	5.486e+05
97	2	1.963e+06	1877.90	0.29	-546.00	0.0	2.148e+05	-1.267e+04	4.27	-1374.20	1621.79	1.963e+06
		1.186e+06	1621.79	3.36e-06	0.0	60.0	2.148e+05	-1.322e+04	4.27	-1374.20	1877.90	1.186e+06
97	5	8.190e+05	-33.48	0.11	-546.00	0.0	8.607e+04	-4211.98	-0.24	-7.76	-33.48	8.190e+05
		5.499e+05	-47.64	1.69e-06	0.0	60.0	8.607e+04	-4757.98	-0.24	-7.76	-47.64	5.499e+05
97	7	6.189e+05	-28.09	0.08	-420.00	0.0	6.505e+04	-3179.58	-0.18	-1.89	-28.09	6.189e+05
		4.156e+05	-39.11	1.16e-06	0.0	60.0	6.505e+04	-3599.58	-0.18	-1.89	-39.11	4.156e+05
97	20	1.756e+06	1886.43	0.27	-420.00	0.0	1.931e+05	-1.160e+04	4.32	-1368.33	1627.18	1.756e+06
		1.047e+06	1627.18	3.16e-06	0.0	60.0	1.931e+05	-1.202e+04	4.32	-1368.33	1886.43	1.047e+06
97	33	6.672e+05	-1778.41	0.09	-420.00	0.0	7.004e+04	-3442.02	19.35	2530.00	-2743.11	6.672e+05
		4.482e+05	-2743.11	-1.41e-04	0.0	60.0	7.004e+04	-3862.02	19.35	2530.00	-1778.41	4.482e+05
97	36	6.664e+05	2707.20	0.09	-420.00	0.0	7.010e+04	-3440.60	-19.70	-2569.17	2707.20	6.664e+05
		4.473e+05	1721.55	1.42e-04	0.0	60.0	7.010e+04	-3860.60	-19.70	-2569.17	1721.55	4.473e+05
97	45	6.682e+05	-452.43	0.09	-420.00	0.0	6.997e+04	-3443.84	5.75	722.58	-724.79	6.682e+05
		4.493e+05	-724.79	-4.25e-05	0.0	60.0	6.997e+04	-3863.84	5.75	722.58	-452.43	4.493e+05
97	46	6.655e+05	-358.78	0.09	-420.00	0.0	7.016e+04	-3438.80	5.78	748.77	-632.81	6.655e+05
		4.462e+05	-632.81	-4.27e-05	0.0	60.0	7.016e+04	-3858.80	5.78	748.77	-358.78	4.462e+05
97	48	6.655e+05	688.87	0.09	-420.00	0.0	7.016e+04	-3438.79	-6.10	-761.74	688.87	6.655e+05
		4.462e+05	395.57	4.39e-05	0.0	60.0	7.016e+04	-3858.79	-6.10	-761.74	395.57	4.462e+05
97	51	6.682e+05	749.46	0.09	-420.00	0.0	6.997e+04	-3443.84	-6.05	-798.73	749.46	6.682e+05
		4.493e+05	445.53	4.32e-05	0.0	60.0	6.997e+04	-3863.84	-6.05	-798.73	445.53	4.493e+05
97	65	6.670e+05	-690.48	0.09	-420.00	0.0	7.006e+04	-3441.58	7.21	958.61	-1049.19	6.670e+05
		4.479e+05	-1049.19	-5.29e-05	0.0	60.0	7.006e+04	-3861.58	7.21	958.61	-690.48	4.479e+05

Trave	Cmb	M3 mx/mn	M2 mx/mn	D 2 / D 3	Q 2 / Q 3	Pos.	N	V 2	V 3	T	M 2	M 3
97	68	6.667e+05	1013.27	0.09	-420.00	0.0	7.008e+04	-3441.04	-7.55	-997.78	1013.27	6.667e+05
		4.476e+05	633.62	5.42e-05	0.0	60.0	7.008e+04	-3861.04	-7.55	-997.78	633.62	4.476e+05
97	77	6.674e+05	-189.04	0.09	-420.00	0.0	7.003e+04	-3442.28	2.06	265.33	-285.63	6.674e+05
		4.483e+05	-285.63	-1.57e-05	0.0	60.0	7.003e+04	-3862.28	2.06	265.33	-189.04	4.483e+05
97	78	6.663e+05	-153.45	0.09	-420.00	0.0	7.010e+04	-3440.35	2.08	275.29	-250.67	6.663e+05
		4.472e+05	-250.67	-1.57e-05	0.0	60.0	7.010e+04	-3860.35	2.08	275.29	-153.45	4.472e+05
97	80	6.663e+05	249.71	0.09	-420.00	0.0	7.010e+04	-3440.34	-2.41	-304.50	249.71	6.663e+05
		4.472e+05	132.18	1.70e-05	0.0	60.0	7.010e+04	-3860.34	-2.41	-304.50	132.18	4.472e+05
97	83	6.674e+05	272.36	0.09	-420.00	0.0	7.003e+04	-3442.28	-2.39	-318.46	272.36	6.674e+05
		4.483e+05	150.79	1.68e-05	0.0	60.0	7.003e+04	-3862.28	-2.39	-318.46	150.79	4.483e+05
97	85	6.668e+05	-17.96	0.09	-420.00	0.0	7.007e+04	-3441.31	-0.17	-19.58	-17.96	6.668e+05
		4.478e+05	-28.43	0.0	0.0	60.0	7.007e+04	-3861.31	-0.17	-19.58	-28.43	4.478e+05
97	87	1.397e+06	1248.14	0.21	-420.00	0.0	1.525e+05	-8906.00	2.82	-918.75	1078.80	1.397e+06
		8.505e+05	1078.80	2.33e-06	0.0	60.0	1.525e+05	-9326.00	2.82	-918.75	1248.14	8.505e+05
97	88	6.349e+05	-24.71	0.08	-420.00	0.0	6.672e+04	-3266.83	-0.18	-7.78	-24.71	6.349e+05
		4.263e+05	-35.55	1.36e-06	0.0	60.0	6.672e+04	-3686.83	-0.18	-7.78	-35.55	4.263e+05
97	95	1.393e+06	1248.14	0.21	-420.00	0.0	1.521e+05	-8881.09	2.82	-918.75	1078.80	1.393e+06
		8.474e+05	1078.80	2.33e-06	0.0	60.0	1.521e+05	-9301.09	2.82	-918.75	1248.14	8.474e+05
97	97	1.349e+06	1125.73	0.20	-420.00	0.0	1.469e+05	-8494.13	2.53	-837.52	974.10	1.349e+06
		8.268e+05	974.10	2.15e-06	0.0	60.0	1.469e+05	-8914.13	2.53	-837.52	1125.73	8.268e+05
97	98	6.646e+05	-18.57	0.09	-420.00	0.0	6.983e+04	-3428.85	-0.18	-18.51	-18.57	6.646e+05
		4.462e+05	-29.08	0.0	0.0	60.0	6.983e+04	-3848.85	-0.18	-18.51	-29.08	4.462e+05
97	102	6.668e+05	-17.96	0.09	-420.00	0.0	7.007e+04	-3441.31	-0.17	-19.58	-17.96	6.668e+05
		4.478e+05	-28.43	0.0	0.0	60.0	7.007e+04	-3861.31	-0.17	-19.58	-28.43	4.478e+05
98	2	1.684e+06	1877.90	0.33	-546.00	0.0	1.934e+05	-1.432e+04	-0.39	-2323.91	1877.90	1.684e+06
		8.086e+05	1854.57	1.26e-05	0.0	60.0	1.934e+05	-1.486e+04	-0.39	-2323.91	1854.57	8.086e+05
98	5	7.317e+05	-47.64	0.12	-546.00	0.0	7.825e+04	-5215.05	-0.08	19.22	-47.64	7.317e+05
		4.024e+05	-52.53	0.0	0.0	60.0	7.825e+04	-5761.05	-0.08	19.22	-52.53	4.024e+05
98	7	5.529e+05	-39.11	0.09	-420.00	0.0	5.914e+04	-3937.69	-0.06	20.23	-39.11	5.529e+05
		3.041e+05	-42.55	0.0	0.0	60.0	5.914e+04	-4357.69	-0.06	20.23	-42.55	3.041e+05
98	20	1.499e+06	1886.43	0.30	-420.00	0.0	1.736e+05	-1.299e+04	-0.36	-2322.89	1886.43	1.499e+06
		7.069e+05	1864.55	1.24e-05	0.0	60.0	1.736e+05	-1.341e+04	-0.36	-2322.89	1864.55	7.069e+05
98	33	5.962e+05	-1064.26	0.10	-420.00	0.0	6.367e+04	-4258.60	18.90	2376.89	-1778.41	5.962e+05
		3.281e+05	-1778.41	-1.59e-04	0.0	60.0	6.367e+04	-4678.60	18.90	2376.89	-1064.26	3.281e+05
98	36	5.953e+05	1721.55	0.10	-420.00	0.0	6.373e+04	-4257.15	-19.06	-2383.63	1721.55	5.953e+05
		3.273e+05	997.73	1.60e-04	0.0	60.0	6.373e+04	-4677.15	-19.06	-2383.63	997.73	3.273e+05
98	49	5.973e+05	-380.26	0.10	-420.00	0.0	6.361e+04	-4260.48	5.53	698.25	-596.04	5.973e+05
		3.290e+05	-596.04	-4.75e-05	0.0	60.0	6.361e+04	-4680.48	5.53	698.25	-380.26	3.290e+05
98	50	5.942e+05	-297.41	0.10	-420.00	0.0	6.380e+04	-4255.23	5.71	725.64	-502.38	5.942e+05
		3.263e+05	-502.38	-4.72e-05	0.0	60.0	6.380e+04	-4675.23	5.71	725.64	-297.41	3.263e+05
98	51	5.973e+05	445.53	0.10	-420.00	0.0	6.361e+04	-4260.51	-5.87	-732.37	445.53	5.973e+05
		3.290e+05	230.88	4.83e-05	0.0	60.0	6.361e+04	-4680.51	-5.87	-732.37	230.88	3.290e+05
98	52	5.942e+05	539.18	0.10	-420.00	0.0	6.380e+04	-4255.27	-5.69	-704.98	539.18	5.942e+05
		3.263e+05	313.73	4.86e-05	0.0	60.0	6.380e+04	-4675.27	-5.69	-704.98	313.73	3.263e+05
98	65	5.959e+05	-422.10	0.10	-420.00	0.0	6.369e+04	-4258.15	7.10	917.75	-690.48	5.959e+05
		3.278e+05	-690.48	-5.98e-05	0.0	60.0	6.369e+04	-4678.15	7.10	917.75	-422.10	3.278e+05
98	68	5.956e+05	633.62	0.10	-420.00	0.0	6.371e+04	-4257.59	-7.26	-924.49	633.62	5.956e+05
		3.275e+05	355.57	6.09e-05	0.0	60.0	6.371e+04	-4677.59	-7.26	-924.49	355.57	3.275e+05
98	81	5.963e+05	-164.24	0.10	-420.00	0.0	6.367e+04	-4258.87	2.04	268.23	-243.24	5.963e+05
		3.282e+05	-243.24	-1.76e-05	0.0	60.0	6.367e+04	-4678.87	2.04	268.23	-164.24	3.282e+05
98	82	5.952e+05	-132.76	0.10	-420.00	0.0	6.374e+04	-4256.86	2.11	278.64	-207.65	5.952e+05
		3.272e+05	-207.65	-1.75e-05	0.0	60.0	6.374e+04	-4676.86	2.11	278.64	-132.76	3.272e+05
98	83	5.963e+05	150.79	0.10	-420.00	0.0	6.367e+04	-4258.89	-2.27	-285.38	150.79	5.963e+05
		3.282e+05	66.23	1.86e-05	0.0	60.0	6.367e+04	-4678.89	-2.27	-285.38	66.23	3.282e+05
98	84	5.952e+05	186.38	0.10	-420.00	0.0	6.374e+04	-4256.87	-2.20	-274.97	186.38	5.952e+05
		3.272e+05	97.71	1.87e-05	0.0	60.0	6.374e+04	-4676.87	-2.20	-274.97	97.71	3.272e+05
98	85	5.957e+05	-28.43	0.10	-420.00	0.0	6.370e+04	-4257.87	-0.08	-3.37	-28.43	5.957e+05
		3.277e+05	-33.27	1.08e-06	0.0	60.0	6.370e+04	-4677.87	-0.08	-3.37	-33.27	3.277e+05
98	87	1.202e+06	1248.14	0.24	-420.00	0.0	1.374e+05	-1.011e+04	-0.27	-1549.72	1248.14	1.202e+06
		5.827e+05	1231.94	8.46e-06	0.0	60.0	1.374e+05	-1.053e+04	-0.27	-1549.72	1231.94	5.827e+05
98	88	5.672e+05	-35.55	0.10	-420.00	0.0	6.066e+04	-4044.42	-0.07	12.37	-35.55	5.672e+05
		3.119e+05	-39.45	0.0	0.0	60.0	6.066e+04	-4464.42	-0.07	12.37	-39.45	3.119e+05
98	95	1.198e+06	1248.14	0.24	-420.00	0.0	1.370e+05	-1.008e+04	-0.27	-1549.72	1248.14	1.198e+06
		5.805e+05	1231.94	8.46e-06	0.0	60.0	1.370e+05	-1.050e+04	-0.27	-1549.72	1231.94	5.805e+05
98	97	1.163e+06	1125.73	0.23	-420.00	0.0	1.324e+05	-9691.61	-0.26	-1406.67	1125.73	1.163e+06
		5.694e+05	1109.98	7.68e-06	0.0	60.0	1.324e+05	-1.011e+04	-0.26	-1406.67	1109.98	5.694e+05
98	98	5.937e+05	-29.08	0.10	-420.00	0.0	6.348e+04	-4242.62	-0.08	-1.94	-29.08	5.937e+05
		3.265e+05	-33.83	1.04e-06	0.0	60.0	6.348e+04	-4662.62	-0.08	-1.94	-33.83	3.265e+05
98	102	5.957e+05	-28.43	0.10	-420.00	0.0	6.370e+04	-4257.87	-0.08	-3.37	-28.43	5.957e+05
		3.277e+05	-33.27	1.08e-06	0.0	60.0	6.370e+04	-4677.87	-0.08	-3.37	-33.27	3.277e+05
99	2	1.366e+06	1854.57	0.36	-546.00	0.0	1.694e+05	-1.593e+04	-8.73	-3088.34	1854.57	1.366e+06
		3.934e+05	1330.72	2.35e-05	0.0	60.0	1.694e+05	-1.648e+04	-8.73	-3088.34	1330.72	3.934e+05
99	5	6.205e+05	-39.44	0.14	-546.00	0.0	6.887e+04	-6211.19	0.22	36.80	-52.53	6.205e+05
		2.314e+05	-52.53	0.0	0.0	60.0	6.887e+04	-6757.19	0.22	36.80	-39.44	2.314e+05
99	7	4.689e+05	-31.43	0.11	-420.00	0.0	5.205e+04	-4690.57	0.19	34.43	-42.55	4.689e+05

Trave	Cmb	M3 mx/mn	M2 mx/mn	D 2 / D 3	Q 2 / Q 3	Pos.	N	V 2	V 3	T	M 2	M 3
		1.749e+05	-42.55	0.0	0.0	60.0	5.205e+04	-5110.57	0.19	34.43	-31.43	1.749e+05
99	20	1.209e+06	1864.55	0.33	-420.00	0.0	1.520e+05	-1.436e+04	-8.76	-3090.71	1864.55	1.209e+06
		3.349e+05	1338.73	2.34e-05	0.0	60.0	1.520e+05	-1.478e+04	-8.76	-3090.71	1338.73	3.349e+05
99	25	5.057e+05	-925.04	0.11	-420.00	0.0	5.604e+04	-5070.98	14.84	2257.79	-925.04	5.057e+05
		1.888e+05	-1267.86	-1.61e-04	0.0	60.0	5.604e+04	-5490.98	14.84	2257.79	-1267.86	1.888e+05
99	28	5.048e+05	1214.47	0.11	-420.00	0.0	5.609e+04	-5066.49	-14.62	-2242.05	858.51	5.048e+05
		1.882e+05	858.51	1.62e-04	0.0	60.0	5.609e+04	-5486.49	-14.62	-2242.05	1214.47	1.882e+05
99	47	5.067e+05	313.62	0.11	-420.00	0.0	5.598e+04	-5076.24	-4.53	-626.54	189.12	5.067e+05
		1.896e+05	189.12	4.84e-05	0.0	60.0	5.598e+04	-5496.24	-4.53	-626.54	313.62	1.896e+05
99	49	5.067e+05	-351.90	0.11	-420.00	0.0	5.598e+04	-5076.22	4.70	712.25	-380.26	5.067e+05
		1.896e+05	-380.26	-5.09e-05	0.0	60.0	5.598e+04	-5496.22	4.70	712.25	-351.90	1.896e+05
99	50	5.037e+05	-293.12	0.11	-420.00	0.0	5.614e+04	-5061.22	5.10	637.81	-297.41	5.037e+05
		1.874e+05	-297.41	-5.03e-05	0.0	60.0	5.614e+04	-5481.22	5.10	637.81	-293.12	1.874e+05
99	52	5.037e+05	313.73	0.11	-420.00	0.0	5.614e+04	-5061.25	-4.48	-696.51	313.73	5.037e+05
		1.874e+05	298.51	5.15e-05	0.0	60.0	5.614e+04	-5481.25	-4.48	-696.51	298.51	1.874e+05
99	57	5.054e+05	-369.64	0.11	-420.00	0.0	5.605e+04	-5069.60	5.69	885.33	-369.64	5.054e+05
		1.886e+05	-494.95	-6.07e-05	0.0	60.0	5.605e+04	-5489.60	5.69	885.33	-494.95	1.886e+05
99	60	5.050e+05	441.56	0.11	-420.00	0.0	5.607e+04	-5067.87	-5.47	-869.59	303.11	5.050e+05
		1.884e+05	303.11	6.14e-05	0.0	60.0	5.607e+04	-5487.87	-5.47	-869.59	441.56	1.884e+05
99	79	5.058e+05	101.61	0.11	-420.00	0.0	5.603e+04	-5071.61	-1.65	-239.95	50.49	5.058e+05
		1.889e+05	50.49	1.85e-05	0.0	60.0	5.603e+04	-5491.61	-1.65	-239.95	101.61	1.889e+05
99	81	5.058e+05	-149.26	0.11	-420.00	0.0	5.603e+04	-5071.61	1.85	282.36	-164.24	5.058e+05
		1.889e+05	-164.24	-1.90e-05	0.0	60.0	5.603e+04	-5491.61	1.85	282.36	-149.26	1.889e+05
99	82	5.046e+05	-126.92	0.11	-420.00	0.0	5.609e+04	-5065.85	2.00	254.07	-132.76	5.046e+05
		1.881e+05	-132.76	-1.88e-05	0.0	60.0	5.609e+04	-5485.85	2.00	254.07	-126.92	1.881e+05
99	84	5.046e+05	97.71	0.11	-420.00	0.0	5.609e+04	-5065.86	-1.63	-266.62	97.71	5.046e+05
		1.881e+05	95.86	1.97e-05	0.0	60.0	5.609e+04	-5485.86	-1.63	-266.62	95.86	1.881e+05
99	85	5.052e+05	-26.70	0.11	-420.00	0.0	5.606e+04	-5068.74	0.11	7.87	-33.27	5.052e+05
		1.885e+05	-33.27	0.0	0.0	60.0	5.606e+04	-5488.74	0.11	7.87	-26.70	1.885e+05
99	87	9.778e+05	1231.94	0.26	-420.00	0.0	1.204e+05	-1.130e+04	-5.81	-2057.85	1231.94	9.778e+05
		2.874e+05	883.59	1.57e-05	0.0	60.0	1.204e+05	-1.172e+04	-5.81	-2057.85	883.59	2.874e+05
99	88	4.810e+05	-29.85	0.11	-420.00	0.0	5.339e+04	-4816.63	0.16	25.58	-39.45	4.810e+05
		1.794e+05	-39.45	0.0	0.0	60.0	5.339e+04	-5236.63	0.16	25.58	-29.85	1.794e+05
99	92	4.810e+05	-29.85	0.11	-420.00	0.0	5.339e+04	-4816.63	0.16	25.58	-39.45	4.810e+05
		1.794e+05	-39.45	0.0	0.0	60.0	5.339e+04	-5236.63	0.16	25.58	-29.85	1.794e+05
99	95	9.744e+05	1231.94	0.26	-420.00	0.0	1.200e+05	-1.126e+04	-5.81	-2057.85	1231.94	9.744e+05
		2.861e+05	883.59	1.57e-05	0.0	60.0	1.200e+05	-1.168e+04	-5.81	-2057.85	883.59	2.861e+05
99	97	9.492e+05	1109.98	0.25	-420.00	0.0	1.160e+05	-1.087e+04	-5.25	-1864.32	1109.98	9.492e+05
		2.845e+05	794.88	1.42e-05	0.0	60.0	1.160e+05	-1.129e+04	-5.25	-1864.32	794.88	2.845e+05
99	98	5.035e+05	-26.98	0.11	-420.00	0.0	5.587e+04	-5050.72	0.11	9.48	-33.83	5.035e+05
		1.878e+05	-33.83	0.0	0.0	60.0	5.587e+04	-5470.72	0.11	9.48	-26.98	1.878e+05
99	102	5.052e+05	-26.70	0.11	-420.00	0.0	5.606e+04	-5068.74	0.11	7.87	-33.27	5.052e+05
		1.885e+05	-33.27	0.0	0.0	60.0	5.606e+04	-5488.74	0.11	7.87	-26.70	1.885e+05
100	2	1.000e+06	1330.72	0.38	-546.00	0.0	1.432e+05	-1.744e+04	-15.02	-3429.25	1330.72	1.000e+06
		-6.296e+04	429.27	3.32e-05	0.0	60.0	1.432e+05	-1.799e+04	-15.02	-3429.25	429.27	-6.296e+04
100	5	4.826e+05	-6.57	0.15	-546.00	0.0	5.805e+04	-7177.01	0.55	37.35	-39.44	4.826e+05
		3.559e+04	-39.44	0.0	0.0	60.0	5.805e+04	-7723.01	0.55	37.35	-6.57	3.559e+04
100	7	3.647e+05	-4.44	0.11	-420.00	0.0	4.387e+04	-5420.55	0.45	34.51	-31.43	3.647e+05
		2.687e+04	-31.43	0.0	0.0	60.0	4.387e+04	-5840.55	0.45	34.51	-4.44	2.687e+04
100	8	8.781e+05	1337.87	0.35	-420.00	0.0	1.285e+05	-1.562e+04	-15.10	-3427.54	1337.87	8.781e+05
		-7.200e+04	431.88	3.32e-05	0.0	60.0	1.285e+05	-1.604e+04	-15.10	-3427.54	431.88	-7.200e+04
100	20	8.781e+05	1338.73	0.35	-420.00	0.0	1.285e+05	-1.562e+04	-15.12	-3432.10	1338.73	8.781e+05
		-7.200e+04	431.40	3.32e-05	0.0	60.0	1.285e+05	-1.604e+04	-15.12	-3432.10	431.40	-7.200e+04
100	26	3.926e+05	1474.30	0.12	-420.00	0.0	4.727e+04	-5851.41	9.82	2219.19	-1250.23	3.926e+05
		2.887e+04	-1250.23	-1.59e-04	0.0	60.0	4.727e+04	-6271.41	9.82	2219.19	1474.30	2.887e+04
100	27	3.934e+05	1196.83	0.12	-420.00	0.0	4.723e+04	-5858.34	-9.16	-2200.25	1196.83	3.934e+05
		2.928e+04	-1488.48	1.59e-04	0.0	60.0	4.723e+04	-6278.34	-9.16	-2200.25	-1488.48	2.928e+04
100	49	3.943e+05	-351.90	0.12	-420.00	0.0	4.718e+04	-5866.40	3.27	738.57	-351.90	3.943e+05
		2.976e+04	-377.78	-5.18e-05	0.0	60.0	4.718e+04	-6286.40	3.27	738.57	-377.78	2.976e+04
100	50	3.916e+05	-293.12	0.12	-420.00	0.0	4.732e+04	-5843.34	3.84	632.44	-293.12	3.916e+05
		2.839e+04	-353.15	-5.09e-05	0.0	60.0	4.732e+04	-6263.34	3.84	632.44	-353.15	2.839e+04
100	51	3.943e+05	338.96	0.12	-420.00	0.0	4.718e+04	-5866.41	-3.18	-613.50	239.73	3.943e+05
		2.976e+04	239.73	5.11e-05	0.0	60.0	4.718e+04	-6286.41	-3.18	-613.50	338.96	2.976e+04
100	52	3.916e+05	363.60	0.12	-420.00	0.0	4.732e+04	-5843.34	-2.61	-719.62	298.51	3.916e+05
		2.840e+04	298.51	5.20e-05	0.0	60.0	4.732e+04	-6263.34	-2.61	-719.62	363.60	2.840e+04
100	58	3.928e+05	553.15	0.12	-420.00	0.0	4.726e+04	-5853.54	3.94	871.80	-488.25	3.928e+05
		2.900e+04	-488.25	-5.99e-05	0.0	60.0	4.726e+04	-6273.54	3.94	871.80	553.15	2.900e+04
100	59	3.931e+05	434.86	0.12	-420.00	0.0	4.724e+04	-5856.20	-3.28	-852.85	434.86	3.931e+05
		2.916e+04	-567.33	6.01e-05	0.0	60.0	4.724e+04	-6276.20	-3.28	-852.85	-567.33	2.916e+04
100	81	3.935e+05	-147.30	0.12	-420.00	0.0	4.723e+04	-5859.29	1.44	293.22	-149.26	3.935e+05
		2.934e+04	-149.26	-1.96e-05	0.0	60.0	4.723e+04	-6279.29	1.44	293.22	-147.30	2.934e+04
100	82	3.924e+05	-126.92	0.12	-420.00	0.0	4.728e+04	-5850.45	1.66	252.89	-126.92	3.924e+05
		2.882e+04	-137.94	-1.92e-05	0.0	60.0	4.728e+04	-6270.45	1.66	252.89	-137.94	2.882e+04
100	83	3.935e+05	123.75	0.12	-420.00	0.0	4.723e+04	-5859.30	-1.01	-233.94	73.52	3.935e+05
		2.934e+04	73.52	1.94e-05	0.0	60.0	4.723e+04	-6279.30	-1.01	-233.94	123.75	2.934e+04

Trave	Cmb	M3 mx/mn	M2 mx/mn	D 2 / D 3	Q 2 / Q 3	Pos.	N	V 2	V 3	T	M 2	M 3
100	84	3.924e+05	133.12	0.12	-420.00	0.0	4.728e+04	-5850.45	-0.79	-274.27	95.86	3.924e+05
		2.882e+04	95.86	1.97e-05	0.0	60.0	4.728e+04	-6270.45	-0.79	-274.27	133.12	2.882e+04
100	85	3.930e+05	-7.09	0.12	-420.00	0.0	4.725e+04	-5854.87	0.33	9.47	-26.70	3.930e+05
		2.908e+04	-26.70	0.0	0.0	60.0	4.725e+04	-6274.87	0.33	9.47	-7.09	2.908e+04
100	87	7.191e+05	883.59	0.27	-420.00	0.0	1.018e+05	-1.241e+04	-9.97	-2284.91	883.59	7.191e+05
		-3.810e+04	285.24	2.22e-05	0.0	60.0	1.018e+05	-1.283e+04	-9.97	-2284.91	285.24	-3.810e+04
100	88	3.741e+05	-5.32	0.12	-420.00	0.0	4.500e+04	-5565.32	0.41	26.16	-29.85	3.741e+05
		2.760e+04	-29.85	0.0	0.0	60.0	4.500e+04	-5985.32	0.41	26.16	-5.32	2.760e+04
100	89	7.164e+05	883.01	0.27	-420.00	0.0	1.014e+05	-1.237e+04	-9.96	-2281.87	883.01	7.164e+05
		-3.831e+04	285.56	2.21e-05	0.0	60.0	1.014e+05	-1.279e+04	-9.96	-2281.87	285.56	-3.831e+04
100	95	7.164e+05	883.59	0.27	-420.00	0.0	1.014e+05	-1.237e+04	-9.97	-2284.91	883.59	7.164e+05
		-3.831e+04	285.24	2.22e-05	0.0	60.0	1.014e+05	-1.279e+04	-9.97	-2284.91	285.24	-3.831e+04
100	97	7.010e+05	794.88	0.26	-420.00	0.0	9.805e+04	-1.198e+04	-9.00	-2067.76	794.88	7.010e+05
		-3.024e+04	254.70	2.00e-05	0.0	60.0	9.805e+04	-1.240e+04	-9.00	-2067.76	254.70	-3.024e+04
100	98	3.916e+05	-6.93	0.12	-420.00	0.0	4.709e+04	-5834.19	0.33	10.99	-26.98	3.916e+05
		2.897e+04	-26.98	0.0	0.0	60.0	4.709e+04	-6254.19	0.33	10.99	-6.93	2.897e+04
100	102	3.930e+05	-7.09	0.12	-420.00	0.0	4.725e+04	-5854.87	0.33	9.47	-26.70	3.930e+05
		2.908e+04	-26.70	0.0	0.0	60.0	4.725e+04	-6274.87	0.33	9.47	-7.09	2.908e+04
101	2	5.322e+05	429.27	0.39	-546.00	0.0	1.174e+05	-1.838e+04	-11.56	-3113.24	429.27	5.322e+05
		-5.870e+05	-264.21	3.96e-05	0.0	60.0	1.174e+05	-1.893e+04	-11.56	-3113.24	-264.21	-5.870e+05
101	4	4.594e+05	431.40	0.35	-420.00	0.0	1.060e+05	-1.644e+04	-11.65	-3114.67	431.40	4.594e+05
		-5.394e+05	-267.83	3.96e-05	0.0	60.0	1.060e+05	-1.686e+04	-11.65	-3114.67	-267.83	-5.394e+05
101	7	2.252e+05	19.98	0.12	-420.00	0.0	3.529e+04	-6001.62	0.41	24.11	-4.44	2.252e+05
		-1.475e+05	-4.44	0.0	0.0	60.0	3.529e+04	-6421.62	0.41	24.11	19.98	-1.475e+05
101	8	4.569e+05	431.88	0.35	-420.00	0.0	1.056e+05	-1.637e+04	-11.64	-3111.16	431.88	4.569e+05
		-5.378e+05	-266.40	3.95e-05	0.0	60.0	1.056e+05	-1.679e+04	-11.64	-3111.16	-266.40	-5.378e+05
101	26	2.424e+05	1474.30	0.13	-420.00	0.0	3.803e+04	-6476.45	11.37	2128.76	1474.30	2.424e+05
		-1.588e+05	957.72	-1.48e-04	0.0	60.0	3.803e+04	-6896.45	11.37	2128.76	957.72	-1.588e+05
101	27	2.430e+05	-933.55	0.13	-420.00	0.0	3.800e+04	-6485.23	-10.73	-2119.21	-1488.48	2.430e+05
		-1.587e+05	-1488.48	1.48e-04	0.0	60.0	3.800e+04	-6905.23	-10.73	-2119.21	-933.55	-1.587e+05
101	49	2.438e+05	-216.67	0.13	-420.00	0.0	3.797e+04	-6495.42	3.61	720.42	-377.78	2.438e+05
		-1.585e+05	-377.78	-4.98e-05	0.0	60.0	3.797e+04	-6915.42	3.61	720.42	-216.67	-1.585e+05
101	51	2.438e+05	338.96	0.13	-420.00	0.0	3.797e+04	-6495.44	-2.43	-596.14	338.96	2.438e+05
		-1.585e+05	233.22	4.87e-05	0.0	60.0	3.797e+04	-6915.44	-2.43	-596.14	233.22	-1.585e+05
101	52	2.416e+05	363.59	0.13	-420.00	0.0	3.806e+04	-6466.26	-2.97	-710.88	363.59	2.416e+05
		-1.590e+05	240.84	4.97e-05	0.0	60.0	3.806e+04	-6886.26	-2.97	-710.88	240.84	-1.590e+05
101	58	2.426e+05	553.15	0.13	-420.00	0.0	3.802e+04	-6479.16	4.50	830.04	553.15	2.426e+05
		-1.588e+05	371.94	-5.61e-05	0.0	60.0	3.802e+04	-6899.16	4.50	830.04	371.94	-1.588e+05
101	59	2.428e+05	-347.77	0.13	-420.00	0.0	3.801e+04	-6482.52	-3.86	-820.50	-567.33	2.428e+05
		-1.587e+05	-567.33	5.60e-05	0.0	60.0	3.801e+04	-6902.52	-3.86	-820.50	-347.77	-1.587e+05
101	81	2.431e+05	-75.29	0.13	-420.00	0.0	3.800e+04	-6486.43	1.56	281.98	-147.30	2.431e+05
		-1.587e+05	-147.30	-1.88e-05	0.0	60.0	3.800e+04	-6906.43	1.56	281.98	-75.29	-1.587e+05
101	83	2.431e+05	123.75	0.13	-420.00	0.0	3.800e+04	-6486.44	-0.72	-228.84	123.75	2.431e+05
		-1.587e+05	96.57	1.84e-05	0.0	60.0	3.800e+04	-6906.44	-0.72	-228.84	96.57	-1.587e+05
101	84	2.423e+05	133.12	0.13	-420.00	0.0	3.803e+04	-6475.25	-0.92	-272.44	133.12	2.423e+05
		-1.588e+05	99.46	1.88e-05	0.0	60.0	3.803e+04	-6895.25	-0.92	-272.44	99.46	-1.588e+05
101	85	2.427e+05	12.09	0.13	-420.00	0.0	3.801e+04	-6480.84	0.32	4.77	-7.09	2.427e+05
		-1.587e+05	-7.09	0.0	0.0	60.0	3.801e+04	-6900.84	0.32	4.77	12.09	-1.587e+05
101	87	3.872e+05	285.24	0.28	-420.00	0.0	8.334e+04	-1.312e+04	-7.66	-2074.86	285.24	3.872e+05
		-4.125e+05	-174.53	2.64e-05	0.0	60.0	8.334e+04	-1.354e+04	-7.66	-2074.86	-174.53	-4.125e+05
101	88	2.310e+05	17.35	0.12	-420.00	0.0	3.620e+04	-6161.36	0.38	17.66	-5.32	2.310e+05
		-1.512e+05	-5.32	0.0	0.0	60.0	3.620e+04	-6581.36	0.38	17.66	17.35	-1.512e+05
101	89	3.855e+05	285.56	0.28	-420.00	0.0	8.309e+04	-1.307e+04	-7.65	-2072.51	285.56	3.855e+05
		-4.114e+05	-173.57	2.64e-05	0.0	60.0	8.309e+04	-1.349e+04	-7.65	-2072.51	-173.57	-4.114e+05
101	97	3.817e+05	254.70	0.27	-420.00	0.0	8.021e+04	-1.270e+04	-6.91	-1876.39	254.70	3.817e+05
		-3.929e+05	-159.74	2.38e-05	0.0	60.0	8.021e+04	-1.312e+04	-6.91	-1876.39	-159.74	-3.929e+05
101	98	2.419e+05	12.57	0.12	-420.00	0.0	3.788e+04	-6458.02	0.32	5.94	-6.93	2.419e+05
		-1.582e+05	-6.93	0.0	0.0	60.0	3.788e+04	-6878.02	0.32	5.94	12.57	-1.582e+05
101	102	2.427e+05	12.09	0.13	-420.00	0.0	3.801e+04	-6480.84	0.32	4.77	-7.09	2.427e+05
		-1.587e+05	-7.09	0.0	0.0	60.0	3.801e+04	-6900.84	0.32	4.77	12.09	-1.587e+05
102	2	-2.840e+05	-8.48e-04	0.38	-546.00	0.0	1.047e+05	-2.283e+04	4.40	-1926.84	-264.21	-2.840e+05
		-1.670e+06	-264.21	4.61e-05	0.0	60.0	1.047e+05	-2.338e+04	4.40	-1926.84	-8.48e-04	-1.670e+06
102	4	-2.783e+05	-8.48e-04	0.34	-420.00	0.0	9.506e+04	-2.038e+04	4.46	-1929.29	-267.83	-2.783e+05
		-1.514e+06	-267.83	4.60e-05	0.0	60.0	9.506e+04	-2.080e+04	4.46	-1929.29	-8.48e-04	-1.514e+06
102	5	-2.345e+04	23.61	0.15	-546.00	0.0	3.945e+04	-1.001e+04	-0.39	23.26	23.61	-2.345e+04
		-6.405e+05	2.38e-06	0.0	0.0	60.0	3.945e+04	-1.056e+04	-0.39	23.26	2.38e-06	-6.405e+05
102	19	-1.776e+04	18.55	0.11	-420.00	0.0	2.982e+04	-7562.81	-0.31	18.52	18.55	-1.776e+04
		-4.841e+05	2.01e-06	0.0	0.0	60.0	2.982e+04	-7982.81	-0.31	18.52	2.01e-06	-4.841e+05
102	21	-1.876e+04	957.72	0.12	-420.00	0.0	3.211e+04	-8158.93	-15.96	1433.65	957.72	-1.876e+04
		-5.213e+05	1.04e-03	-1.34e-04	0.0	60.0	3.211e+04	-8578.93	-15.96	1433.65	1.04e-03	-5.213e+05
102	24	-1.919e+04	-1.04e-03	0.12	-420.00	0.0	3.212e+04	-8168.26	15.56	-1417.31	-933.55	-1.919e+04
		-5.215e+05	-933.55	1.34e-04	0.0	60.0	3.212e+04	-8588.26	15.56	-1417.31	-1.04e-03	-5.215e+05
102	49	-1.826e+04	3.56e-04	0.12	-420.00	0.0	3.210e+04	-8148.06	3.61	484.32	-216.67	-1.826e+04
		-5.212e+05	-216.67	-4.58e-05	0.0	60.0	3.210e+04	-8568.06	3.61	484.32	3.56e-04	-5.212e+05
102	51	-1.826e+04	233.22	0.12	-420.00	0.0	3.210e+04	-8148.10	-3.89	-381.39	233.22	-1.826e+04

Trave	Cmb	M3 mx/mn	M2 mx/mn	D 2 / D 3	Q 2 / Q 3	Pos.	N	V 2	V 3	T	M 2	M 3
		-5.212e+05	-3.43e-04	4.50e-05	0.0	60.0	3.210e+04	-8568.10	-3.89	-381.39	-3.43e-04	-5.212e+05
102	52	-1.968e+04	240.84	0.12	-420.00	0.0	3.213e+04	-8179.13	-4.01	-467.98	240.84	-1.968e+04
		-5.216e+05	-3.58e-04	4.62e-05	0.0	60.0	3.213e+04	-8599.13	-4.01	-467.98	-3.58e-04	-5.216e+05
102	53	-1.889e+04	371.94	0.12	-420.00	0.0	3.211e+04	-8161.80	-6.20	562.58	371.94	-1.889e+04
		-5.214e+05	3.92e-04	-5.05e-05	0.0	60.0	3.211e+04	-8581.80	-6.20	562.58	3.92e-04	-5.214e+05
102	56	-1.906e+04	-3.94e-04	0.12	-420.00	0.0	3.212e+04	-8165.38	5.80	-546.25	-347.77	-1.906e+04
		-5.214e+05	-347.77	5.08e-05	0.0	60.0	3.212e+04	-8585.38	5.80	-546.25	-3.94e-04	-5.214e+05
102	81	-1.870e+04	1.34e-04	0.12	-420.00	0.0	3.211e+04	-8157.63	1.25	192.93	-75.29	-1.870e+04
		-5.213e+05	-75.29	-1.72e-05	0.0	60.0	3.211e+04	-8577.63	1.25	192.93	1.34e-04	-5.213e+05
102	83	-1.870e+04	96.57	0.12	-420.00	0.0	3.211e+04	-8157.65	-1.61	-143.68	96.57	-1.870e+04
		-5.213e+05	-1.30e-04	1.71e-05	0.0	60.0	3.211e+04	-8577.65	-1.61	-143.68	-1.30e-04	-5.213e+05
102	84	-1.925e+04	99.46	0.12	-420.00	0.0	3.212e+04	-8169.55	-1.66	-176.59	99.46	-1.925e+04
		-5.215e+05	-1.36e-04	1.75e-05	0.0	60.0	3.212e+04	-8589.55	-1.66	-176.59	-1.36e-04	-5.215e+05
102	85	-1.897e+04	12.09	0.12	-420.00	0.0	3.212e+04	-8163.59	-0.20	8.17	12.09	-1.897e+04
		-5.214e+05	0.0	0.0	0.0	60.0	3.212e+04	-8583.59	-0.20	8.17	0.0	-5.214e+05
102	87	-1.919e+05	-5.66e-04	0.27	-420.00	0.0	7.408e+04	-1.631e+04	2.91	-1283.47	-174.53	-1.919e+05
		-1.183e+06	-174.53	3.07e-05	0.0	60.0	7.408e+04	-1.673e+04	2.91	-1283.47	-5.66e-04	-1.183e+06
102	88	-1.816e+04	17.35	0.12	-420.00	0.0	3.058e+04	-7763.06	-0.29	16.60	17.35	-1.816e+04
		-4.965e+05	1.47e-06	0.0	0.0	60.0	3.058e+04	-8183.06	-0.29	16.60	1.47e-06	-4.965e+05
102	94	-1.816e+04	16.39	0.12	-420.00	0.0	3.058e+04	-7763.07	-0.27	15.07	16.39	-1.816e+04
		-4.965e+05	1.03e-06	0.0	0.0	60.0	3.058e+04	-8183.07	-0.27	15.07	1.03e-06	-4.965e+05
102	97	-1.752e+05	-5.11e-04	0.26	-420.00	0.0	7.106e+04	-1.580e+04	2.66	-1160.51	-159.74	-1.752e+05
		-1.136e+06	-159.74	2.78e-05	0.0	60.0	7.106e+04	-1.622e+04	2.66	-1160.51	-5.11e-04	-1.136e+06
102	98	-1.892e+04	12.57	0.12	-420.00	0.0	3.201e+04	-8134.98	-0.21	8.94	12.57	-1.892e+04
		-5.196e+05	0.0	0.0	0.0	60.0	3.201e+04	-8554.98	-0.21	8.94	0.0	-5.196e+05
102	101	-1.892e+04	12.09	0.12	-420.00	0.0	3.201e+04	-8134.99	-0.20	8.17	12.09	-1.892e+04
		-5.196e+05	0.0	0.0	0.0	60.0	3.201e+04	-8554.99	-0.20	8.17	0.0	-5.196e+05
102	102	-1.897e+04	12.09	0.12	-420.00	0.0	3.212e+04	-8163.59	-0.20	8.17	12.09	-1.897e+04
		-5.214e+05	0.0	0.0	0.0	60.0	3.212e+04	-8583.59	-0.20	8.17	0.0	-5.214e+05
124	2	-6.238e+04	1.624e+04	-0.42	-546.00	0.0	1.011e+05	2.675e+04	270.59	3.987e+04	-0.02	-1.651e+06
		-1.651e+06	-0.02	-8.11e-04	0.0	60.0	1.011e+05	2.620e+04	270.59	3.987e+04	1.624e+04	-6.238e+04
124	7	-1.933e+04	6274.62	-0.11	-420.00	0.0	2.981e+04	7987.31	104.58	3714.16	-2.31e-03	-4.860e+05
		-4.860e+05	-2.31e-03	-1.44e-04	0.0	60.0	2.981e+04	7567.31	104.58	3714.16	6274.62	-1.933e+04
124	22	-1.868e+04	5763.43	-0.12	-420.00	0.0	3.201e+04	8603.85	96.06	2417.22	-1.28e-03	-5.224e+05
		-5.224e+05	-1.28e-03	-4.37e-06	0.0	60.0	3.201e+04	8183.85	96.06	2417.22	5763.43	-1.868e+04
124	27	-2.287e+04	7654.29	-0.12	-420.00	0.0	3.219e+04	8567.83	127.57	5686.44	-3.69e-03	-5.242e+05
		-5.242e+05	-3.69e-03	-3.07e-04	0.0	60.0	3.219e+04	8147.83	127.57	5686.44	7654.29	-2.287e+04
124	29	-1.917e+04	7829.18	-0.12	-420.00	0.0	3.201e+04	8610.23	130.49	2396.52	-1.41e-03	-5.225e+05
		-5.225e+05	-1.41e-03	-1.97e-05	0.0	60.0	3.201e+04	8190.23	130.49	2396.52	7829.18	-1.917e+04
124	30	-1.876e+04	7818.13	-0.12	-420.00	0.0	3.200e+04	8601.34	130.30	2425.06	-1.40e-03	-5.223e+05
		-5.223e+05	-1.40e-03	-1.91e-05	0.0	60.0	3.200e+04	8181.34	130.30	2425.06	7818.13	-1.876e+04
124	31	-2.278e+04	5599.63	-0.12	-420.00	0.0	3.220e+04	8570.36	93.33	5650.36	-3.57e-03	-5.243e+05
		-5.243e+05	-3.57e-03	-2.90e-04	0.0	60.0	3.220e+04	8150.36	93.33	5650.36	5599.63	-2.278e+04
124	54	-1.998e+04	6348.10	-0.12	-420.00	0.0	3.207e+04	8592.62	105.80	3407.20	-2.03e-03	-5.230e+05
		-5.230e+05	-2.03e-03	-9.66e-05	0.0	60.0	3.207e+04	8172.62	105.80	3407.20	6348.10	-1.998e+04
124	59	-2.157e+04	7069.65	-0.12	-420.00	0.0	3.214e+04	8579.08	117.83	4678.95	-2.94e-03	-5.237e+05
		-5.237e+05	-2.94e-03	-2.12e-04	0.0	60.0	3.214e+04	8159.08	117.83	4678.95	7069.65	-2.157e+04
124	61	-2.017e+04	7135.23	-0.12	-420.00	0.0	3.207e+04	8595.08	118.92	3399.29	-2.08e-03	-5.230e+05
		-5.230e+05	-2.08e-03	-1.03e-04	0.0	60.0	3.207e+04	8175.08	118.92	3399.29	7135.23	-2.017e+04
124	62	-2.001e+04	7131.00	-0.12	-420.00	0.0	3.206e+04	8591.67	118.85	3410.13	-2.08e-03	-5.229e+05
		-5.229e+05	-2.08e-03	-1.03e-04	0.0	60.0	3.206e+04	8171.67	118.85	3410.13	7131.00	-2.001e+04
124	63	-2.153e+04	6286.76	-0.12	-420.00	0.0	3.214e+04	8580.03	104.78	4665.29	-2.89e-03	-5.237e+05
		-5.237e+05	-2.89e-03	-2.05e-04	0.0	60.0	3.214e+04	8160.03	104.78	4665.29	6286.76	-2.153e+04
124	85	-2.077e+04	6708.88	-0.12	-420.00	0.0	3.210e+04	8585.85	111.81	4037.71	-2.49e-03	-5.233e+05
		-5.233e+05	-2.49e-03	-1.54e-04	0.0	60.0	3.210e+04	8165.85	111.81	4037.71	6708.88	-2.077e+04
124	87	-4.436e+04	1.172e+04	-0.30	-420.00	0.0	7.165e+04	1.898e+04	195.30	2.712e+04	-0.01	-1.170e+06
		-1.170e+06	-0.01	-5.61e-04	0.0	60.0	7.165e+04	1.856e+04	195.30	2.712e+04	1.172e+04	-4.436e+04
124	88	-1.981e+04	6419.37	-0.12	-420.00	0.0	3.057e+04	8186.82	106.99	3822.01	-2.37e-03	-4.984e+05
		-4.984e+05	-2.37e-03	-1.47e-04	0.0	60.0	3.057e+04	7766.82	106.99	3822.01	6419.37	-1.981e+04
124	97	-4.274e+04	1.144e+04	-0.28	-420.00	0.0	6.887e+04	1.825e+04	190.68	2.498e+04	-0.01	-1.125e+06
		-1.125e+06	-0.01	-5.26e-04	0.0	60.0	6.887e+04	1.783e+04	190.68	2.498e+04	1.144e+04	-4.274e+04
124	98	-2.070e+04	6688.28	-0.12	-420.00	0.0	3.199e+04	8557.34	111.47	4022.16	-2.48e-03	-5.215e+05
		-5.215e+05	-2.48e-03	-1.54e-04	0.0	60.0	3.199e+04	8137.34	111.47	4022.16	6688.28	-2.070e+04
124	102	-2.077e+04	6708.88	-0.12	-420.00	0.0	3.210e+04	8585.85	111.81	4037.71	-2.49e-03	-5.233e+05
		-5.233e+05	-2.49e-03	-1.54e-04	0.0	60.0	3.210e+04	8165.85	111.81	4037.71	6708.88	-2.077e+04
125	2	8.142e+05	2.835e+04	-0.43	-546.00	0.0	1.215e+05	2.288e+04	201.94	8.070e+04	1.624e+04	-5.421e+05
		-5.421e+05	1.624e+04	-3.02e-04	0.0	60.0	1.215e+05	2.233e+04	201.94	8.070e+04	2.835e+04	8.142e+05
125	7	2.251e+05	9583.48	-0.12	-420.00	0.0	3.540e+04	6483.36	55.15	8525.21	6274.62	-1.513e+05
		-1.513e+05	6274.62	-4.03e-05	0.0	60.0	3.540e+04	6063.36	55.15	8525.21	9583.48	2.251e+05
125	19	2.251e+05	9582.52	-0.12	-420.00	0.0	3.540e+04	6483.39	55.15	8528.57	6273.48	-1.513e+05
		-1.513e+05	6273.48	-4.03e-05	0.0	60.0	3.540e+04	6063.39	55.15	8528.57	9582.52	2.251e+05
125	22	2.456e+05	9270.81	-0.13	-420.00	0.0	3.804e+04	6999.01	50.38	6889.63	5763.43	-1.617e+05
		-1.617e+05	5763.43	1.25e-04	0.0	60.0	3.804e+04	6579.01	50.38	6889.63	9270.81	2.456e+05
125	30	2.454e+05	1.159e+04	-0.13	-420.00	0.0	3.804e+04	6996.51	50.16	6949.25	7818.13	-1.616e+05
		-1.616e+05	7818.13	1.09e-04	0.0	60.0	3.804e+04	6576.51	50.16	6949.25	1.159e+04	2.454e+05

Trave	Cmb	M3 mx/mn	M2 mx/mn	D 2 / D 3	Q 2 / Q 3	Pos.	N	V 2	V 3	T	M 2	M 3
125	31	2.397e+05	9011.31	-0.13	-420.00	0.0	3.821e+04	6938.89	69.64	1.150e+04	5599.62	-1.642e+05
		-1.642e+05	5599.62	-1.96e-04	0.0	60.0	3.821e+04	6518.89	69.64	1.150e+04	9011.31	2.397e+05
125	32	2.403e+05	8998.93	-0.13	-420.00	0.0	3.818e+04	6947.86	69.43	1.153e+04	5588.57	-1.641e+05
		-1.641e+05	5588.57	-1.95e-04	0.0	60.0	3.818e+04	6527.86	69.43	1.153e+04	8998.93	2.403e+05
125	33	2.447e+05	1.161e+04	-0.13	-420.00	0.0	3.806e+04	6987.56	50.36	6948.93	7829.14	-1.618e+05
		-1.618e+05	7829.14	1.08e-04	0.0	60.0	3.806e+04	6567.56	50.36	6948.93	1.161e+04	2.447e+05
125	54	2.437e+05	9912.85	-0.13	-420.00	0.0	3.809e+04	6979.57	56.26	8318.64	6348.09	-1.624e+05
		-1.624e+05	6348.09	2.00e-05	0.0	60.0	3.809e+04	6559.57	56.26	8318.64	9912.85	2.437e+05
125	62	2.436e+05	1.079e+04	-0.13	-420.00	0.0	3.809e+04	6978.63	56.18	8340.62	7130.99	-1.624e+05
		-1.624e+05	7130.99	1.39e-05	0.0	60.0	3.809e+04	6558.63	56.18	8340.62	1.079e+04	2.436e+05
125	63	2.414e+05	9814.64	-0.13	-420.00	0.0	3.815e+04	6956.77	63.62	1.011e+04	6286.76	-1.634e+05
		-1.634e+05	6286.76	-1.01e-04	0.0	60.0	3.815e+04	6536.77	63.62	1.011e+04	9814.64	2.414e+05
125	64	2.417e+05	9809.91	-0.13	-420.00	0.0	3.814e+04	6960.21	63.54	1.012e+04	6282.53	-1.634e+05
		-1.634e+05	6282.53	-1.01e-04	0.0	60.0	3.814e+04	6540.21	63.54	1.012e+04	9809.91	2.417e+05
125	65	2.434e+05	1.080e+04	-0.13	-420.00	0.0	3.810e+04	6975.20	56.25	8340.49	7135.21	-1.625e+05
		-1.625e+05	7135.21	1.37e-05	0.0	60.0	3.810e+04	6555.20	56.25	8340.49	1.080e+04	2.434e+05
125	85	2.425e+05	1.030e+04	-0.13	-420.00	0.0	3.812e+04	6967.70	59.90	9224.14	6708.88	-1.629e+05
		-1.629e+05	6708.88	-4.36e-05	0.0	60.0	3.812e+04	6547.70	59.90	9224.14	1.030e+04	2.425e+05
125	87	5.751e+05	2.027e+04	-0.30	-420.00	0.0	8.607e+04	1.618e+04	142.61	5.503e+04	1.172e+04	-3.831e+05
		-3.831e+05	1.172e+04	-2.07e-04	0.0	60.0	8.607e+04	1.576e+04	142.61	5.503e+04	2.027e+04	5.751e+05
125	88	2.309e+05	9823.20	-0.12	-420.00	0.0	3.631e+04	6644.81	56.73	8758.19	6419.37	-1.552e+05
		-1.552e+05	6419.37	-4.14e-05	0.0	60.0	3.631e+04	6224.81	56.73	8758.19	9823.20	2.309e+05
125	94	2.309e+05	9822.56	-0.12	-420.00	0.0	3.631e+04	6644.83	56.73	8760.43	6418.61	-1.552e+05
		-1.552e+05	6418.61	-4.14e-05	0.0	60.0	3.631e+04	6224.83	56.73	8760.43	9822.56	2.309e+05
125	97	5.508e+05	1.965e+04	-0.29	-420.00	0.0	8.267e+04	1.551e+04	136.78	5.081e+04	1.144e+04	-3.671e+05
		-3.671e+05	1.144e+04	-1.92e-04	0.0	60.0	8.267e+04	1.509e+04	136.78	5.081e+04	1.965e+04	5.508e+05
125	98	2.417e+05	1.027e+04	-0.13	-420.00	0.0	3.799e+04	6944.63	59.67	9190.62	6688.28	-1.624e+05
		-1.624e+05	6688.28	-4.35e-05	0.0	60.0	3.799e+04	6524.63	59.67	9190.62	1.027e+04	2.417e+05
125	101	2.417e+05	1.027e+04	-0.13	-420.00	0.0	3.799e+04	6944.64	59.67	9191.74	6687.90	-1.624e+05
		-1.624e+05	6687.90	-4.35e-05	0.0	60.0	3.799e+04	6524.64	59.67	9191.74	1.027e+04	2.417e+05
125	102	2.425e+05	1.030e+04	-0.13	-420.00	0.0	3.812e+04	6967.70	59.90	9224.14	6708.88	-1.629e+05
		-1.629e+05	6708.88	-4.36e-05	0.0	60.0	3.812e+04	6547.70	59.90	9224.14	1.030e+04	2.425e+05
126	2	1.365e+06	2.835e+04	-0.42	-546.00	0.0	1.536e+05	2.183e+04	-86.02	1.051e+05	2.835e+04	7.124e+04
		7.124e+04	2.319e+04	1.94e-04	0.0	60.0	1.536e+05	2.129e+04	-86.02	1.051e+05	2.319e+04	1.365e+06
126	7	3.666e+05	9583.48	-0.11	-420.00	0.0	4.398e+04	5877.85	-40.40	1.167e+04	9583.48	2.649e+04
		2.649e+04	7159.71	8.26e-05	0.0	60.0	4.398e+04	5457.85	-40.40	1.167e+04	7159.71	3.666e+05
126	19	3.666e+05	9582.52	-0.11	-420.00	0.0	4.398e+04	5877.89	-40.39	1.167e+04	9582.52	2.649e+04
		2.649e+04	7159.08	8.26e-05	0.0	60.0	4.398e+04	5457.89	-40.39	1.167e+04	7159.08	3.666e+05
126	22	3.977e+05	9270.80	-0.12	-420.00	0.0	4.727e+04	6333.17	-53.90	1.036e+04	9270.80	3.033e+04
		3.033e+04	6843.82	2.60e-04	0.0	60.0	4.727e+04	5913.17	-53.90	1.036e+04	6843.82	3.977e+05
126	23	3.923e+05	1.133e+04	-0.12	-420.00	0.0	4.746e+04	6298.84	-32.47	1.489e+04	1.133e+04	2.689e+04
		2.689e+04	8578.92	-8.30e-05	0.0	60.0	4.746e+04	5878.84	-32.47	1.489e+04	8578.92	3.923e+05
126	33	3.967e+05	1.161e+04	-0.12	-420.00	0.0	4.731e+04	6324.86	-52.45	1.038e+04	1.161e+04	2.987e+04
		2.987e+04	6656.72	2.47e-04	0.0	60.0	4.731e+04	5904.86	-52.45	1.038e+04	6656.72	3.967e+05
126	34	3.975e+05	1.159e+04	-0.12	-420.00	0.0	4.727e+04	6331.83	-52.28	1.035e+04	1.159e+04	3.028e+04
		3.028e+04	6633.18	2.48e-04	0.0	60.0	4.727e+04	5911.83	-52.28	1.035e+04	6633.18	3.975e+05
126	54	3.960e+05	9912.84	-0.12	-420.00	0.0	4.733e+04	6322.54	-47.26	1.175e+04	9912.84	2.926e+04
		2.926e+04	7384.60	1.54e-04	0.0	60.0	4.733e+04	5902.54	-47.26	1.175e+04	7384.60	3.960e+05
126	55	3.939e+05	1.069e+04	-0.12	-420.00	0.0	4.741e+04	6309.47	-39.12	1.351e+04	1.069e+04	2.796e+04
		2.796e+04	8038.14	2.38e-05	0.0	60.0	4.741e+04	5889.47	-39.12	1.351e+04	8038.14	3.939e+05
126	65	3.956e+05	1.080e+04	-0.12	-420.00	0.0	4.735e+04	6319.37	-46.71	1.175e+04	1.080e+04	2.908e+04
		2.908e+04	7313.48	1.49e-04	0.0	60.0	4.735e+04	5899.37	-46.71	1.175e+04	7313.48	3.956e+05
126	66	3.959e+05	1.079e+04	-0.12	-420.00	0.0	4.733e+04	6322.04	-46.65	1.174e+04	1.079e+04	2.924e+04
		2.924e+04	7304.50	1.49e-04	0.0	60.0	4.733e+04	5902.04	-46.65	1.174e+04	7304.50	3.959e+05
126	85	3.950e+05	1.030e+04	-0.12	-420.00	0.0	4.737e+04	6316.01	-43.19	1.263e+04	1.030e+04	2.861e+04
		2.861e+04	7711.37	8.87e-05	0.0	60.0	4.737e+04	5896.01	-43.19	1.263e+04	7711.37	3.950e+05
126	87	9.625e+05	2.027e+04	-0.29	-420.00	0.0	1.087e+05	1.540e+04	-63.10	7.176e+04	2.027e+04	5.131e+04
		5.131e+04	1.649e+04	1.41e-04	0.0	60.0	1.087e+05	1.498e+04	-63.10	7.176e+04	1.649e+04	9.625e+05
126	88	3.760e+05	9823.19	-0.12	-420.00	0.0	4.511e+04	6023.90	-41.33	1.199e+04	9823.19	2.720e+04
		2.720e+04	7343.60	8.46e-05	0.0	60.0	4.511e+04	5603.90	-41.33	1.199e+04	7343.60	3.760e+05
126	94	3.760e+05	9822.56	-0.12	-420.00	0.0	4.511e+04	6023.93	-41.32	1.199e+04	9822.56	2.720e+04
		2.720e+04	7343.18	8.46e-05	0.0	60.0	4.511e+04	5603.93	-41.32	1.199e+04	7343.18	3.760e+05
126	97	9.204e+05	1.965e+04	-0.28	-420.00	0.0	1.043e+05	1.471e+04	-62.55	6.634e+04	1.965e+04	5.012e+04
		5.012e+04	1.589e+04	1.39e-04	0.0	60.0	1.043e+05	1.429e+04	-62.55	6.634e+04	1.589e+04	9.204e+05
126	98	3.936e+05	1.027e+04	-0.12	-420.00	0.0	4.721e+04	6295.14	-43.06	1.258e+04	1.027e+04	2.851e+04
		2.851e+04	7685.15	8.84e-05	0.0	60.0	4.721e+04	5875.14	-43.06	1.258e+04	7685.15	3.936e+05
126	101	3.936e+05	1.027e+04	-0.12	-420.00	0.0	4.721e+04	6295.15	-43.05	1.258e+04	1.027e+04	2.851e+04
		2.851e+04	7684.94	8.84e-05	0.0	60.0	4.721e+04	5875.15	-43.05	1.258e+04	7684.94	3.936e+05
126	102	3.950e+05	1.030e+04	-0.12	-420.00	0.0	4.737e+04	6316.01	-43.19	1.263e+04	1.030e+04	2.861e+04
		2.861e+04	7711.37	8.87e-05	0.0	60.0	4.737e+04	5896.01	-43.19	1.263e+04	7711.37	3.950e+05
127	2	1.812e+06	2.319e+04	-0.39	-546.00	0.0	1.858e+05	2.022e+04	-131.57	1.103e+05	2.319e+04	6.150e+05
		6.150e+05	1.530e+04	4.54e-04	0.0	60.0	1.858e+05	1.968e+04	-131.57	1.103e+05	1.530e+04	1.812e+06
127	7	4.715e+05	7159.71	-0.11	-420.00	0.0	5.216e+04	5125.81	-62.86	1.175e+04	7159.71	1.766e+05
		1.766e+05	3388.22	1.50e-04	0.0	60.0	5.216e+04	4705.81	-62.86	1.175e+04	3388.22	4.715e+05
127	19	4.715e+05	7159.08	-0.11	-420.00	0.0	5.216e+04	5125.84	-62.85	1.176e+04	7159.08	1.766e+05

Trave	Cmb	M3 mx/mn	M2 mx/mn	D 2 / D 3	Q 2 / Q 3	Pos.	N	V 2	V 3	T	M 2	M 3
		1.766e+05	3387.82	1.50e-04	0.0	60.0	5.216e+04	4705.84	-62.85	1.176e+04	3387.82	4.715e+05
127	22	5.102e+05	6843.82	-0.11	-420.00	0.0	5.604e+04	5515.05	-82.86	1.055e+04	6843.82	1.920e+05
		1.920e+05	2631.55	3.31e-04	0.0	60.0	5.604e+04	5095.05	-82.86	1.055e+04	2631.55	5.102e+05
127	23	5.058e+05	8578.92	-0.11	-420.00	0.0	5.631e+04	5496.79	-52.34	1.491e+04	8578.92	1.885e+05
		1.885e+05	4679.21	-1.13e-05	0.0	60.0	5.631e+04	5076.79	-52.34	1.491e+04	4679.21	5.058e+05
127	26	5.102e+05	6842.38	-0.11	-420.00	0.0	5.604e+04	5515.04	-82.86	1.055e+04	6842.38	1.920e+05
		1.920e+05	2603.05	3.31e-04	0.0	60.0	5.604e+04	5095.04	-82.86	1.055e+04	2603.05	5.102e+05
127	35	5.060e+05	8789.56	-0.11	-420.00	0.0	5.629e+04	5497.50	-53.69	1.492e+04	8789.56	1.886e+05
		1.886e+05	4481.35	-6.93e-06	0.0	60.0	5.629e+04	5077.50	-53.69	1.492e+04	4481.35	5.060e+05
127	54	5.088e+05	7384.60	-0.11	-420.00	0.0	5.613e+04	5509.41	-73.37	1.188e+04	7384.60	1.909e+05
		1.909e+05	3268.67	2.26e-04	0.0	60.0	5.613e+04	5089.41	-73.37	1.188e+04	3268.67	5.088e+05
127	55	5.072e+05	8038.14	-0.11	-420.00	0.0	5.622e+04	5502.43	-61.82	1.358e+04	8038.14	1.896e+05
		1.896e+05	4042.09	9.80e-05	0.0	60.0	5.622e+04	5082.43	-61.82	1.358e+04	4042.09	5.072e+05
127	58	5.088e+05	7384.05	-0.11	-420.00	0.0	5.613e+04	5509.41	-73.37	1.188e+04	7384.05	1.909e+05
		1.909e+05	3257.81	2.26e-04	0.0	60.0	5.613e+04	5089.41	-73.37	1.188e+04	3257.81	5.088e+05
127	67	5.072e+05	8118.24	-0.11	-420.00	0.0	5.622e+04	5502.69	-62.33	1.358e+04	8118.24	1.896e+05
		1.896e+05	3967.61	1.01e-04	0.0	60.0	5.622e+04	5082.69	-62.33	1.358e+04	3967.61	5.072e+05
127	85	5.080e+05	7711.37	-0.11	-420.00	0.0	5.618e+04	5505.92	-67.60	1.273e+04	7711.37	1.903e+05
		1.903e+05	3655.38	1.62e-04	0.0	60.0	5.618e+04	5085.92	-67.60	1.273e+04	3655.38	5.080e+05
127	87	1.276e+06	1.649e+04	-0.28	-420.00	0.0	1.314e+05	1.422e+04	-96.72	7.522e+04	1.649e+04	4.354e+05
		4.354e+05	1.069e+04	3.24e-04	0.0	60.0	1.314e+05	1.380e+04	-96.72	7.522e+04	1.069e+04	1.276e+06
127	88	4.837e+05	7343.60	-0.11	-420.00	0.0	5.350e+04	5252.51	-64.44	1.208e+04	7343.60	1.811e+05
		1.811e+05	3477.28	1.54e-04	0.0	60.0	5.350e+04	4832.51	-64.44	1.208e+04	3477.28	4.837e+05
127	94	4.837e+05	7343.18	-0.11	-420.00	0.0	5.350e+04	5252.53	-64.44	1.208e+04	7343.18	1.811e+05
		1.811e+05	3477.01	1.54e-04	0.0	60.0	5.350e+04	4832.53	-64.44	1.208e+04	3477.01	4.837e+05
127	97	1.218e+06	1.589e+04	-0.26	-420.00	0.0	1.259e+05	1.354e+04	-96.25	6.947e+04	1.589e+04	4.179e+05
		4.179e+05	1.012e+04	3.14e-04	0.0	60.0	1.259e+05	1.312e+04	-96.25	6.947e+04	1.012e+04	1.218e+06
127	98	5.063e+05	7685.15	-0.11	-420.00	0.0	5.598e+04	5487.82	-67.37	1.268e+04	7685.15	1.896e+05
		1.896e+05	3642.69	1.61e-04	0.0	60.0	5.598e+04	5067.82	-67.37	1.268e+04	3642.69	5.063e+05
127	101	5.063e+05	7684.94	-0.11	-420.00	0.0	5.598e+04	5487.83	-67.37	1.268e+04	7684.94	1.896e+05
		1.896e+05	3642.55	1.61e-04	0.0	60.0	5.598e+04	5067.83	-67.37	1.268e+04	3642.55	5.063e+05
127	102	5.080e+05	7711.37	-0.11	-420.00	0.0	5.618e+04	5505.92	-67.60	1.273e+04	7711.37	1.903e+05
		1.903e+05	3655.38	1.62e-04	0.0	60.0	5.618e+04	5085.92	-67.60	1.273e+04	3655.38	5.080e+05
128	2	2.213e+06	1.530e+04	-0.35	-546.00	0.0	2.160e+05	1.865e+04	-32.39	1.014e+05	1.530e+04	1.110e+06
		1.110e+06	1.335e+04	5.07e-04	0.0	60.0	2.160e+05	1.810e+04	-32.39	1.014e+05	1.335e+04	2.213e+06
128	7	5.553e+05	3388.23	-0.09	-420.00	0.0	5.926e+04	4363.93	-48.09	1.028e+04	3388.23	3.061e+05
		3.061e+05	503.01	1.67e-04	0.0	60.0	5.926e+04	3943.93	-48.09	1.028e+04	503.01	5.553e+05
128	19	5.554e+05	3387.83	-0.09	-420.00	0.0	5.926e+04	4363.96	-48.08	1.029e+04	3387.83	3.061e+05
		3.061e+05	502.76	1.67e-04	0.0	60.0	5.926e+04	3943.96	-48.08	1.029e+04	502.76	5.554e+05
128	21	5.990e+05	2604.77	-0.10	-420.00	0.0	6.399e+04	4692.38	-69.83	8952.11	2604.77	3.282e+05
		3.282e+05	-1267.67	3.38e-04	0.0	60.0	6.399e+04	4272.38	-69.83	8952.11	-1267.67	5.990e+05
128	24	5.977e+05	4706.00	-0.10	-420.00	0.0	6.367e+04	4677.83	-33.73	1.335e+04	4706.00	3.315e+05
		3.315e+05	2364.85	2.16e-05	0.0	60.0	6.367e+04	4257.83	-33.73	1.335e+04	2364.85	5.977e+05
128	26	5.999e+05	2603.05	-0.10	-420.00	0.0	6.393e+04	4693.93	-69.78	8952.04	2603.05	3.290e+05
		3.290e+05	-1269.52	3.38e-04	0.0	60.0	6.393e+04	4273.93	-69.78	8952.04	-1269.52	5.999e+05
128	27	5.968e+05	4707.71	-0.10	-420.00	0.0	6.373e+04	4676.28	-33.78	1.335e+04	4707.71	3.307e+05
		3.307e+05	2366.69	2.15e-05	0.0	60.0	6.373e+04	4256.28	-33.78	1.335e+04	2366.69	5.968e+05
128	37	5.972e+05	3299.57	-0.10	-420.00	0.0	6.396e+04	4684.94	-57.26	1.050e+04	3299.57	3.281e+05
		3.281e+05	-41.11	2.27e-04	0.0	60.0	6.396e+04	4264.94	-57.26	1.050e+04	-41.11	5.972e+05
128	38	6.002e+05	3388.86	-0.10	-420.00	0.0	6.377e+04	4690.10	-57.11	1.048e+04	3388.86	3.308e+05
		3.308e+05	57.39	2.28e-04	0.0	60.0	6.377e+04	4270.10	-57.11	1.048e+04	57.39	6.002e+05
128	53	5.986e+05	3258.47	-0.10	-420.00	0.0	6.389e+04	4687.85	-58.60	1.030e+04	3258.47	3.292e+05
		3.292e+05	-138.67	2.40e-04	0.0	60.0	6.389e+04	4267.85	-58.60	1.030e+04	-138.67	5.986e+05
128	56	5.981e+05	4052.29	-0.10	-420.00	0.0	6.377e+04	4682.36	-44.96	1.200e+04	4052.29	3.305e+05
		3.305e+05	1235.85	1.20e-04	0.0	60.0	6.377e+04	4262.36	-44.96	1.200e+04	1235.85	5.981e+05
128	58	5.989e+05	3257.81	-0.10	-420.00	0.0	6.387e+04	4688.44	-58.59	1.030e+04	3257.81	3.295e+05
		3.295e+05	-139.38	2.40e-04	0.0	60.0	6.387e+04	4268.44	-58.59	1.030e+04	-139.38	5.989e+05
128	59	5.978e+05	4052.95	-0.10	-420.00	0.0	6.379e+04	4681.77	-44.97	1.200e+04	4052.95	3.302e+05
		3.302e+05	1236.56	1.20e-04	0.0	60.0	6.379e+04	4261.77	-44.97	1.200e+04	1236.56	5.978e+05
128	69	5.979e+05	3520.84	-0.10	-420.00	0.0	6.388e+04	4685.03	-53.85	1.090e+04	3520.84	3.292e+05
		3.292e+05	325.34	1.98e-04	0.0	60.0	6.388e+04	4265.03	-53.85	1.090e+04	325.34	5.979e+05
128	70	5.991e+05	3554.84	-0.10	-420.00	0.0	6.381e+04	4687.01	-53.80	1.089e+04	3554.84	3.302e+05
		3.302e+05	362.85	1.98e-04	0.0	60.0	6.381e+04	4267.01	-53.80	1.089e+04	362.85	5.991e+05
128	85	5.983e+05	3655.38	-0.10	-420.00	0.0	6.383e+04	4685.11	-51.78	1.115e+04	3655.38	3.298e+05
		3.298e+05	548.59	1.80e-04	0.0	60.0	6.383e+04	4265.11	-51.78	1.115e+04	548.59	5.983e+05
128	87	1.555e+06	1.069e+04	-0.25	-420.00	0.0	1.525e+05	1.306e+04	-28.50	6.912e+04	1.069e+04	7.841e+05
		7.841e+05	8975.46	3.62e-04	0.0	60.0	1.525e+05	1.264e+04	-28.50	6.912e+04	8975.46	1.555e+06
128	88	5.697e+05	3477.28	-0.10	-420.00	0.0	6.078e+04	4470.99	-49.32	1.057e+04	3477.28	3.140e+05
		3.140e+05	518.21	1.71e-04	0.0	60.0	6.078e+04	4050.99	-49.32	1.057e+04	518.21	5.697e+05
128	94	5.697e+05	3477.01	-0.10	-420.00	0.0	6.079e+04	4471.01	-49.32	1.058e+04	3477.01	3.140e+05
		3.140e+05	518.04	1.71e-04	0.0	60.0	6.079e+04	4051.01	-49.32	1.058e+04	518.04	5.697e+05
128	97	1.481e+06	1.012e+04	-0.24	-420.00	0.0	1.460e+05	1.238e+04	-32.72	6.377e+04	1.012e+04	7.509e+05
		7.509e+05	8156.24	3.51e-04	0.0	60.0	1.460e+05	1.196e+04	-32.72	6.377e+04	8156.24	1.481e+06
128	98	5.963e+05	3642.69	-0.10	-420.00	0.0	6.361e+04	4669.81	-51.60	1.111e+04	3642.69	3.287e+05
		3.287e+05	546.44	1.79e-04	0.0	60.0	6.361e+04	4249.81	-51.60	1.111e+04	546.44	5.963e+05

Trave	Cmb	M3 mx/mn	M2 mx/mn	D 2 / D 3	Q 2 / Q 3	Pos.	N	V 2	V 3	T	M 2	M 3
128	101	5.963e+05	3642.55	-0.10	-420.00	0.0	6.361e+04	4669.82	-51.60	1.111e+04	3642.55	3.287e+05
		3.287e+05	546.35	1.79e-04	0.0	60.0	6.361e+04	4249.82	-51.60	1.111e+04	546.35	5.963e+05
128	102	5.983e+05	3655.38	-0.10	-420.00	0.0	6.383e+04	4685.11	-51.78	1.115e+04	3655.38	3.298e+05
		3.298e+05	548.59	1.80e-04	0.0	60.0	6.383e+04	4265.11	-51.78	1.115e+04	548.59	5.983e+05
129	1	8.285e+05	674.05	-0.11	-546.00	0.0	8.698e+04	4802.22	-36.63	1.118e+04	674.05	5.568e+05
		5.568e+05	-1523.65	2.04e-04	0.0	60.0	8.698e+04	4256.22	-36.63	1.118e+04	-1523.65	8.285e+05
129	2	2.591e+06	1.676e+04	-0.30	-546.00	0.0	2.435e+05	1.727e+04	56.80	8.169e+04	1.335e+04	1.571e+06
		1.571e+06	1.335e+04	4.49e-04	0.0	60.0	2.435e+05	1.672e+04	56.80	8.169e+04	1.676e+04	2.591e+06
129	7	6.209e+05	503.02	-0.08	-420.00	0.0	6.519e+04	3604.61	-27.45	8353.81	503.02	4.173e+05
		4.173e+05	-1144.16	1.53e-04	0.0	60.0	6.519e+04	3184.61	-27.45	8353.81	-1144.16	6.209e+05
129	8	2.383e+06	1.714e+04	-0.27	-420.00	0.0	2.217e+05	1.607e+04	65.98	7.887e+04	1.318e+04	1.432e+06
		1.432e+06	1.318e+04	3.98e-04	0.0	60.0	2.217e+05	1.565e+04	65.98	7.887e+04	1.714e+04	2.383e+06
129	21	6.680e+05	-1267.67	-0.09	-420.00	0.0	7.039e+04	3878.74	-47.73	6801.78	-1267.67	4.482e+05
		4.482e+05	-3973.69	3.07e-04	0.0	60.0	7.039e+04	3458.74	-47.73	6801.78	-3973.69	6.680e+05
129	24	6.700e+05	2364.85	-0.09	-420.00	0.0	7.005e+04	3855.35	-11.42	1.133e+04	2364.85	4.510e+05
		4.510e+05	1521.87	2.27e-05	0.0	60.0	7.005e+04	3435.35	-11.42	1.133e+04	1521.87	6.700e+05
129	26	6.688e+05	-1269.51	-0.09	-420.00	0.0	7.033e+04	3880.26	-47.72	6801.80	-1269.51	4.491e+05
		4.491e+05	-3975.47	3.05e-04	0.0	60.0	7.033e+04	3460.26	-47.72	6801.80	-3975.47	6.688e+05
129	27	6.692e+05	2366.69	-0.09	-420.00	0.0	7.011e+04	3853.83	-11.43	1.133e+04	2366.69	4.501e+05
		4.501e+05	1523.65	2.47e-05	0.0	60.0	7.011e+04	3433.83	-11.43	1.133e+04	1523.65	6.692e+05
129	37	6.675e+05	-41.10	-0.09	-420.00	0.0	7.036e+04	3868.25	-35.04	8397.59	-41.10	4.478e+05
		4.478e+05	-2093.93	2.13e-04	0.0	60.0	7.036e+04	3448.25	-35.04	8397.59	-2093.93	6.675e+05
129	40	6.705e+05	1138.28	-0.09	-420.00	0.0	7.008e+04	3865.84	-24.11	9733.63	1138.28	4.514e+05
		4.514e+05	-357.88	1.16e-04	0.0	60.0	7.008e+04	3445.84	-24.11	9733.63	-357.88	6.705e+05
129	53	6.686e+05	-138.67	-0.09	-420.00	0.0	7.029e+04	3871.44	-36.44	8195.53	-138.67	4.490e+05
		4.490e+05	-2265.64	2.19e-04	0.0	60.0	7.029e+04	3451.44	-36.44	8195.53	-2265.64	6.686e+05
129	56	6.694e+05	1235.85	-0.09	-420.00	0.0	7.016e+04	3862.65	-22.71	9935.69	1235.85	4.501e+05
		4.501e+05	-186.18	1.11e-04	0.0	60.0	7.016e+04	3442.65	-22.71	9935.69	-186.18	6.694e+05
129	58	6.689e+05	-139.38	-0.09	-420.00	0.0	7.026e+04	3872.02	-36.43	8195.54	-139.38	4.494e+05
		4.494e+05	-2266.32	2.18e-04	0.0	60.0	7.026e+04	3452.02	-36.43	8195.54	-2266.32	6.689e+05
129	59	6.691e+05	1236.56	-0.09	-420.00	0.0	7.018e+04	3862.07	-22.72	9935.68	1236.56	4.498e+05
		4.498e+05	-185.50	1.12e-04	0.0	60.0	7.018e+04	3442.07	-22.72	9935.68	-185.50	6.691e+05
129	69	6.684e+05	325.34	-0.09	-420.00	0.0	7.027e+04	3867.48	-31.64	8808.82	325.34	4.489e+05
		4.489e+05	-1554.47	1.83e-04	0.0	60.0	7.027e+04	3447.48	-31.64	8808.82	-1554.47	6.684e+05
129	72	6.696e+05	771.84	-0.09	-420.00	0.0	7.017e+04	3866.61	-27.51	9322.41	771.84	4.503e+05
		4.503e+05	-897.35	1.47e-04	0.0	60.0	7.017e+04	3446.61	-27.51	9322.41	-897.35	6.696e+05
129	85	6.690e+05	548.59	-0.09	-420.00	0.0	7.022e+04	3867.04	-29.57	9065.61	548.59	4.496e+05
		4.496e+05	-1225.91	1.65e-04	0.0	60.0	7.022e+04	3447.04	-29.57	9065.61	-1225.91	6.690e+05
129	86	6.415e+05	522.51	-0.08	-420.00	0.0	6.735e+04	3717.09	-28.36	8659.65	522.51	4.311e+05
		4.311e+05	-1179.22	1.58e-04	0.0	60.0	6.735e+04	3297.09	-28.36	8659.65	-1179.22	6.415e+05
129	87	1.816e+06	1.101e+04	-0.21	-420.00	0.0	1.717e+05	1.203e+04	33.92	5.567e+04	8975.45	1.107e+06
		1.107e+06	8975.45	3.21e-04	0.0	60.0	1.717e+05	1.161e+04	33.92	5.567e+04	1.101e+04	1.816e+06
129	88	6.370e+05	518.21	-0.08	-420.00	0.0	6.687e+04	3692.09	-28.16	8591.08	518.21	4.280e+05
		4.280e+05	-1171.41	1.57e-04	0.0	60.0	6.687e+04	3272.09	-28.16	8591.08	-1171.41	6.370e+05
129	89	1.812e+06	1.102e+04	-0.21	-420.00	0.0	1.712e+05	1.200e+04	34.13	5.560e+04	8971.15	1.104e+06
		1.104e+06	8971.15	3.20e-04	0.0	60.0	1.712e+05	1.158e+04	34.13	5.560e+04	1.102e+04	1.812e+06
129	96	6.690e+05	548.59	-0.09	-420.00	0.0	7.022e+04	3867.04	-29.57	9065.61	548.59	4.496e+05
		4.496e+05	-1225.91	1.65e-04	0.0	60.0	7.022e+04	3447.04	-29.57	9065.61	-1225.91	6.690e+05
129	97	1.726e+06	9745.22	-0.20	-420.00	0.0	1.641e+05	1.134e+04	26.48	5.137e+04	8156.23	1.058e+06
		1.058e+06	8156.23	3.12e-04	0.0	60.0	1.641e+05	1.092e+04	26.48	5.137e+04	9745.22	1.726e+06
129	98	6.667e+05	546.44	-0.09	-420.00	0.0	6.998e+04	3854.55	-29.47	9031.33	546.44	4.480e+05
		4.480e+05	-1222.01	1.64e-04	0.0	60.0	6.998e+04	3434.55	-29.47	9031.33	-1222.01	6.667e+05
129	102	6.690e+05	548.59	-0.09	-420.00	0.0	7.022e+04	3867.04	-29.57	9065.61	548.59	4.496e+05
		4.496e+05	-1225.91	1.65e-04	0.0	60.0	7.022e+04	3447.04	-29.57	9065.61	-1225.91	6.690e+05
130	1	8.923e+05	-1523.64	-0.09	-546.00	0.0	9.331e+04	3793.19	-16.65	8558.64	-1523.64	6.811e+05
		6.811e+05	-2522.40	1.66e-04	0.0	60.0	9.331e+04	3247.19	-16.65	8558.64	-2522.40	8.923e+05
130	2	2.760e+06	2.002e+04	-0.23	-546.00	0.0	2.655e+05	1.168e+04	54.32	5.358e+04	1.676e+04	2.076e+06
		2.076e+06	1.676e+04	3.57e-04	0.0	60.0	2.655e+05	1.113e+04	54.32	5.358e+04	2.002e+04	2.760e+06
130	7	6.688e+05	-1144.16	-0.07	-420.00	0.0	6.994e+04	2848.35	-12.48	6394.30	-1144.16	5.105e+05
		5.105e+05	-1892.74	1.24e-04	0.0	60.0	6.994e+04	2428.35	-12.48	6394.30	-1892.74	6.688e+05
130	8	2.537e+06	2.065e+04	-0.21	-420.00	0.0	2.422e+05	1.073e+04	58.49	5.142e+04	1.714e+04	1.905e+06
		1.905e+06	1.714e+04	3.15e-04	0.0	60.0	2.422e+05	1.031e+04	58.49	5.142e+04	2.065e+04	2.537e+06
130	21	7.195e+05	-3973.68	-0.07	-420.00	0.0	7.551e+04	3064.85	-29.70	4777.96	-3973.68	5.489e+05
		5.489e+05	-5651.08	2.49e-04	0.0	60.0	7.551e+04	2644.85	-29.70	4777.96	-5651.08	7.195e+05
130	24	7.215e+05	1586.41	-0.07	-420.00	0.0	7.515e+04	3039.78	2.82	9116.57	1521.87	5.511e+05
		5.511e+05	1521.87	1.91e-05	0.0	60.0	7.515e+04	2619.78	2.82	9116.57	1586.41	7.215e+05
130	26	7.202e+05	-3975.46	-0.07	-420.00	0.0	7.546e+04	3069.27	-29.70	4778.00	-3975.46	5.498e+05
		5.498e+05	-5652.60	2.49e-04	0.0	60.0	7.546e+04	2649.27	-29.70	4778.00	-5652.60	7.202e+05
130	27	7.209e+05	1587.94	-0.07	-420.00	0.0	7.521e+04	3035.36	2.82	9116.54	1523.65	5.502e+05
		5.502e+05	1523.65	1.91e-05	0.0	60.0	7.521e+04	2615.36	2.82	9116.54	1587.94	7.209e+05
130	41	7.193e+05	-1935.91	-0.07	-420.00	0.0	7.546e+04	3049.28	-18.55	6351.50	-1935.91	5.483e+05
		5.483e+05	-3020.13	1.70e-04	0.0	60.0	7.546e+04	2629.28	-18.55	6351.50	-3020.13	7.193e+05
130	44	7.218e+05	-515.90	-0.07	-420.00	0.0	7.521e+04	3055.34	-8.33	7543.03	-515.90	5.517e+05
		5.517e+05	-1044.54	9.74e-05	0.0	60.0	7.521e+04	2635.34	-8.33	7543.03	-1044.54	7.218e+05
130	53	7.202e+05	-2265.63	-0.07	-420.00	0.0	7.540e+04	3057.01	-19.58	6118.14	-2265.63	5.496e+05

Trave	Cmb	M3 mx/mn	M2 mx/mn	D 2 / D 3	Q 2 / Q 3	Pos.	N	V 2	V 3	T	M 2	M 3
		5.496e+05	-3401.34	1.77e-04	0.0	60.0	7.540e+04	2637.01	-19.58	6118.14	-3401.34	7.202e+05
130	56	7.209e+05	-186.18	-0.07	-420.00	0.0	7.526e+04	3047.61	-7.30	7776.39	-186.18	5.504e+05
		5.504e+05	-663.32	9.05e-05	0.0	60.0	7.526e+04	2627.61	-7.30	7776.39	-663.32	7.209e+05
130	58	7.204e+05	-2266.32	-0.07	-420.00	0.0	7.538e+04	3058.71	-19.58	6118.15	-2266.32	5.499e+05
		5.499e+05	-3401.93	1.77e-04	0.0	60.0	7.538e+04	2638.71	-19.58	6118.15	-3401.93	7.204e+05
130	59	7.207e+05	-185.50	-0.07	-420.00	0.0	7.528e+04	3045.92	-7.30	7776.38	-185.50	5.501e+05
		5.501e+05	-662.74	9.05e-05	0.0	60.0	7.528e+04	2625.92	-7.30	7776.38	-662.74	7.207e+05
130	73	7.200e+05	-1494.80	-0.07	-420.00	0.0	7.538e+04	3051.12	-15.37	6719.28	-1494.80	5.493e+05
		5.493e+05	-2406.19	1.48e-04	0.0	60.0	7.538e+04	2631.12	-15.37	6719.28	-2406.19	7.200e+05
130	76	7.210e+05	-957.01	-0.07	-420.00	0.0	7.528e+04	3053.51	-11.51	7175.25	-957.01	5.507e+05
		5.507e+05	-1658.47	1.20e-04	0.0	60.0	7.528e+04	2633.51	-11.51	7175.25	-1658.47	7.210e+05
130	85	7.205e+05	-1225.91	-0.07	-420.00	0.0	7.533e+04	3052.31	-13.44	6947.27	-1225.91	5.500e+05
		5.500e+05	-2032.33	1.34e-04	0.0	60.0	7.533e+04	2632.31	-13.44	6947.27	-2032.33	7.205e+05
130	86	6.910e+05	-1179.22	-0.07	-420.00	0.0	7.225e+04	2935.77	-12.89	6632.06	-1179.22	5.274e+05
		5.274e+05	-1952.58	1.28e-04	0.0	60.0	7.225e+04	2515.77	-12.89	6632.06	-1952.58	6.910e+05
130	87	1.936e+06	1.308e+04	-0.16	-420.00	0.0	1.871e+05	8190.89	34.42	3.665e+04	1.101e+04	1.457e+06
		1.457e+06	1.101e+04	2.56e-04	0.0	60.0	1.871e+05	7770.89	34.42	3.665e+04	1.308e+04	1.936e+06
130	88	6.860e+05	-1171.41	-0.07	-420.00	0.0	7.174e+04	2916.34	-12.80	6578.62	-1171.41	5.237e+05
		5.237e+05	-1939.27	1.28e-04	0.0	60.0	7.174e+04	2496.34	-12.80	6578.62	-1939.27	6.860e+05
130	89	1.931e+06	1.309e+04	-0.16	-420.00	0.0	1.865e+05	8171.46	34.51	3.660e+04	1.102e+04	1.454e+06
		1.454e+06	1.102e+04	2.55e-04	0.0	60.0	1.865e+05	7751.46	34.51	3.660e+04	1.309e+04	1.931e+06
130	96	7.205e+05	-1225.91	-0.07	-420.00	0.0	7.533e+04	3052.31	-13.44	6947.27	-1225.91	5.500e+05
		5.500e+05	-2032.33	1.34e-04	0.0	60.0	7.533e+04	2632.31	-13.44	6947.27	-2032.33	7.205e+05
130	97	1.841e+06	1.149e+04	-0.16	-420.00	0.0	1.787e+05	7781.92	29.14	3.396e+04	9745.22	1.387e+06
		1.387e+06	9745.22	2.49e-04	0.0	60.0	1.787e+05	7361.92	29.14	3.396e+04	1.149e+04	1.841e+06
130	98	7.181e+05	-1222.00	-0.07	-420.00	0.0	7.507e+04	3042.60	-13.39	6920.55	-1222.00	5.481e+05
		5.481e+05	-2025.68	1.33e-04	0.0	60.0	7.507e+04	2622.60	-13.39	6920.55	-2025.68	7.181e+05
130	102	7.205e+05	-1225.91	-0.07	-420.00	0.0	7.533e+04	3052.31	-13.44	6947.27	-1225.91	5.500e+05
		5.500e+05	-2032.33	1.34e-04	0.0	60.0	7.533e+04	2632.31	-13.44	6947.27	-2032.33	7.205e+05
131	1	9.326e+05	-2522.40	-0.06	-546.00	0.0	9.806e+04	2786.54	-5.72	6031.53	-2522.40	7.818e+05
		7.818e+05	-2865.52	1.20e-04	0.0	60.0	9.806e+04	2240.54	-5.72	6031.53	-2865.52	9.326e+05
131	2	2.798e+06	2.002e+04	-0.16	-546.00	0.0	2.793e+05	6263.10	-17.66	2.042e+04	2.002e+04	2.439e+06
		2.439e+06	1.896e+04	2.57e-04	0.0	60.0	2.793e+05	5717.10	-17.66	2.042e+04	1.896e+04	2.798e+06
131	7	6.990e+05	-1892.74	-0.05	-420.00	0.0	7.350e+04	2093.87	-4.29	4503.00	-1892.74	5.859e+05
		5.859e+05	-2150.07	9.00e-05	0.0	60.0	7.350e+04	1673.87	-4.29	4503.00	-2150.07	6.990e+05
131	8	2.564e+06	2.065e+04	-0.14	-420.00	0.0	2.548e+05	5570.43	-16.23	1.889e+04	2.065e+04	2.243e+06
		2.243e+06	1.968e+04	2.27e-04	0.0	60.0	2.548e+05	5150.43	-16.23	1.889e+04	1.968e+04	2.564e+06
131	21	7.518e+05	-5651.07	-0.05	-420.00	0.0	7.935e+04	2250.00	-17.29	3069.62	-5651.07	6.302e+05
		6.302e+05	-6612.15	1.80e-04	0.0	60.0	7.935e+04	1830.00	-17.29	3069.62	-6612.15	7.518e+05
131	24	7.544e+05	1993.88	-0.05	-420.00	0.0	7.899e+04	2229.06	8.06	6733.48	1586.41	6.324e+05
		6.324e+05	1586.41	1.34e-05	0.0	60.0	7.899e+04	1809.06	8.06	6733.48	1993.88	7.544e+05
131	26	7.522e+05	-5652.60	-0.05	-420.00	0.0	7.930e+04	2256.89	-17.28	3069.69	-5652.60	6.310e+05
		6.310e+05	-6613.27	1.80e-04	0.0	60.0	7.930e+04	1836.89	-17.28	3069.69	-6613.27	7.522e+05
131	27	7.540e+05	1994.99	-0.05	-420.00	0.0	7.903e+04	2222.17	8.06	6733.41	1587.94	6.315e+05
		6.315e+05	1587.94	1.35e-05	0.0	60.0	7.903e+04	1802.17	8.06	6733.41	1994.99	7.540e+05
131	41	7.521e+05	-3020.12	-0.05	-420.00	0.0	7.928e+04	2232.07	-8.77	4435.80	-3020.12	6.297e+05
		6.297e+05	-3529.57	1.25e-04	0.0	60.0	7.928e+04	1812.07	-8.77	4435.80	-3529.57	7.521e+05
131	53	7.526e+05	-3401.34	-0.05	-420.00	0.0	7.923e+04	2243.44	-9.40	4203.68	-3401.34	6.309e+05
		6.309e+05	-3936.71	1.28e-04	0.0	60.0	7.923e+04	1823.44	-9.40	4203.68	-3936.71	7.526e+05
131	56	7.536e+05	-663.32	-0.05	-420.00	0.0	7.910e+04	2235.62	0.17	5599.42	-663.32	6.317e+05
		6.317e+05	-681.56	6.53e-05	0.0	60.0	7.910e+04	1815.62	0.17	5599.42	-681.56	7.536e+05
131	58	7.527e+05	-3401.93	-0.05	-420.00	0.0	7.922e+04	2246.09	-9.40	4203.71	-3401.93	6.312e+05
		6.312e+05	-3937.14	1.28e-04	0.0	60.0	7.922e+04	1826.09	-9.40	4203.71	-3937.14	7.527e+05
131	59	7.534e+05	-662.74	-0.05	-420.00	0.0	7.911e+04	2232.98	0.17	5599.39	-662.74	6.314e+05
		6.314e+05	-681.14	6.53e-05	0.0	60.0	7.911e+04	1812.98	0.17	5599.39	-681.14	7.534e+05
131	73	7.527e+05	-2406.19	-0.05	-420.00	0.0	7.921e+04	2236.64	-6.18	4723.85	-2406.19	6.307e+05
		6.307e+05	-2770.86	1.08e-04	0.0	60.0	7.921e+04	1816.64	-6.18	4723.85	-2770.86	7.527e+05
131	85	7.531e+05	-2032.33	-0.05	-420.00	0.0	7.917e+04	2239.53	-4.61	4901.55	-2032.33	6.313e+05
		6.313e+05	-2309.14	9.69e-05	0.0	60.0	7.917e+04	1819.53	-4.61	4901.55	-2309.14	7.531e+05
131	86	7.222e+05	-1952.57	-0.05	-420.00	0.0	7.593e+04	2156.30	-4.43	4674.56	-1952.57	6.054e+05
		6.054e+05	-2218.23	9.29e-05	0.0	60.0	7.593e+04	1736.30	-4.43	4674.56	-2218.23	7.222e+05
131	87	1.966e+06	1.308e+04	-0.11	-420.00	0.0	1.968e+05	4474.00	-12.39	1.427e+04	1.308e+04	1.710e+06
		1.710e+06	1.233e+04	1.84e-04	0.0	60.0	1.968e+05	4054.00	-12.39	1.427e+04	1.233e+04	1.966e+06
131	88	7.170e+05	-1939.27	-0.05	-420.00	0.0	7.539e+04	2142.42	-4.40	4635.85	-1939.27	6.011e+05
		6.011e+05	-2203.09	9.23e-05	0.0	60.0	7.539e+04	1722.42	-4.40	4635.85	-2203.09	7.170e+05
131	89	1.961e+06	1.309e+04	-0.11	-420.00	0.0	1.962e+05	4460.13	-12.36	1.423e+04	1.309e+04	1.706e+06
		1.706e+06	1.235e+04	1.83e-04	0.0	60.0	1.962e+05	4040.13	-12.36	1.423e+04	1.235e+04	1.961e+06
131	96	7.531e+05	-2032.33	-0.05	-420.00	0.0	7.917e+04	2239.53	-4.61	4901.55	-2032.33	6.313e+05
		6.313e+05	-2309.14	9.69e-05	0.0	60.0	7.917e+04	1819.53	-4.61	4901.55	-2309.14	7.531e+05
131	97	1.872e+06	1.149e+04	-0.11	-420.00	0.0	1.879e+05	4325.47	-11.78	1.354e+04	1.149e+04	1.625e+06
		1.625e+06	1.079e+04	1.79e-04	0.0	60.0	1.879e+05	3905.47	-11.78	1.354e+04	1.079e+04	1.872e+06
131	98	7.505e+05	-2025.68	-0.05	-420.00	0.0	7.890e+04	2232.59	-4.60	4882.20	-2025.68	6.291e+05
		6.291e+05	-2301.56	9.65e-05	0.0	60.0	7.890e+04	1812.59	-4.60	4882.20	-2301.56	7.505e+05
131	102	7.531e+05	-2032.33	-0.05	-420.00	0.0	7.917e+04	2239.53	-4.61	4901.55	-2032.33	6.313e+05
		6.313e+05	-2309.14	9.69e-05	0.0	60.0	7.917e+04	1819.53	-4.61	4901.55	-2309.14	7.531e+05

Trave	Cmb	M3 mx/mn	M2 mx/mn	D 2 / D 3	Q 2 / Q 3	Pos.	N	V 2	V 3	T	M 2	M 3
132	1	9.494e+05	-2865.52	-0.04	-546.00	0.0	1.012e+05	1780.90	-1.19	3577.15	-2865.52	8.589e+05
		8.589e+05	-2936.98	7.22e-05	0.0	60.0	1.012e+05	1234.90	-1.19	3577.15	-2936.98	9.494e+05
132	2	2.708e+06	1.896e+04	-0.08	-546.00	0.0	2.847e+05	857.35	-104.88	-1.229e+04	1.896e+04	2.673e+06
		2.673e+06	1.267e+04	1.52e-04	0.0	60.0	2.847e+05	311.35	-104.88	-1.229e+04	1.267e+04	2.708e+06
132	7	7.115e+05	-2150.07	-0.03	-420.00	0.0	7.587e+04	1340.13	-0.90	2666.39	-2150.07	6.437e+05
		6.437e+05	-2203.95	5.42e-05	0.0	60.0	7.587e+04	920.13	-0.90	2666.39	-2203.95	7.115e+05
132	20	2.470e+06	1.968e+04	-0.07	-420.00	0.0	2.594e+05	416.60	-104.58	-1.320e+04	1.968e+04	2.458e+06
		2.458e+06	1.340e+04	1.34e-04	0.0	60.0	2.594e+05	-3.40	-104.58	-1.320e+04	1.340e+04	2.470e+06
132	21	7.651e+05	-6612.15	-0.03	-420.00	0.0	8.190e+04	1433.35	-8.68	1656.65	-6612.15	6.923e+05
		6.923e+05	-7078.87	1.06e-04	0.0	60.0	8.190e+04	1013.35	-8.68	1656.65	-7078.87	7.651e+05
132	24	7.681e+05	2346.33	-0.03	-420.00	0.0	8.154e+04	1421.81	6.78	4171.89	1993.88	6.948e+05
		6.948e+05	1993.88	1.05e-05	0.0	60.0	8.154e+04	1001.81	6.78	4171.89	2346.33	7.681e+05
132	26	7.653e+05	-6613.26	-0.03	-420.00	0.0	8.187e+04	1442.03	-8.67	1656.75	-6613.26	6.929e+05
		6.929e+05	-7079.46	1.06e-04	0.0	60.0	8.187e+04	1022.03	-8.67	1656.75	-7079.46	7.653e+05
132	27	7.680e+05	2346.92	-0.03	-420.00	0.0	8.157e+04	1413.13	6.77	4171.78	1994.99	6.942e+05
		6.942e+05	1994.99	1.05e-05	0.0	60.0	8.157e+04	993.13	6.77	4171.78	2346.92	7.680e+05
132	41	7.660e+05	-3529.57	-0.03	-420.00	0.0	8.181e+04	1415.95	-3.71	2640.81	-3529.57	6.922e+05
		6.922e+05	-3743.29	7.66e-05	0.0	60.0	8.181e+04	995.95	-3.71	2640.81	-3743.29	7.660e+05
132	53	7.661e+05	-3936.71	-0.03	-420.00	0.0	8.179e+04	1429.72	-3.87	2436.13	-3936.71	6.931e+05
		6.931e+05	-4148.54	7.63e-05	0.0	60.0	8.179e+04	1009.72	-3.87	2436.13	-4148.54	7.661e+05
132	56	7.672e+05	-584.00	-0.03	-420.00	0.0	8.165e+04	1425.44	1.97	3392.41	-681.56	6.940e+05
		6.940e+05	-681.56	4.02e-05	0.0	60.0	8.165e+04	1005.44	1.97	3392.41	-584.00	7.672e+05
132	58	7.661e+05	-3937.14	-0.03	-420.00	0.0	8.178e+04	1433.05	-3.87	2436.16	-3937.14	6.933e+05
		6.933e+05	-4148.77	7.63e-05	0.0	60.0	8.178e+04	1013.05	-3.87	2436.16	-4148.77	7.661e+05
132	59	7.671e+05	-583.77	-0.03	-420.00	0.0	8.166e+04	1422.11	1.96	3392.37	-681.13	6.938e+05
		6.938e+05	-681.13	4.02e-05	0.0	60.0	8.166e+04	1002.11	1.96	3392.37	-583.77	7.671e+05
132	73	7.664e+05	-2770.85	-0.03	-420.00	0.0	8.176e+04	1423.10	-1.99	2810.06	-2770.85	6.930e+05
		6.930e+05	-2887.10	6.52e-05	0.0	60.0	8.176e+04	1003.10	-1.99	2810.06	-2887.10	7.664e+05
132	85	7.666e+05	-2309.13	-0.03	-420.00	0.0	8.172e+04	1427.58	-0.95	2914.27	-2309.13	6.936e+05
		6.936e+05	-2366.27	5.82e-05	0.0	60.0	8.172e+04	1007.58	-0.95	2914.27	-2366.27	7.666e+05
132	86	7.351e+05	-2218.23	-0.03	-420.00	0.0	7.838e+04	1377.61	-0.92	2773.34	-2218.23	6.651e+05
		6.651e+05	-2273.49	5.59e-05	0.0	60.0	7.838e+04	957.61	-0.92	2773.34	-2273.49	7.351e+05
132	87	1.908e+06	1.233e+04	-0.06	-420.00	0.0	2.007e+05	761.91	-70.04	-7804.69	1.233e+04	1.874e+06
		1.874e+06	8130.51	1.09e-04	0.0	60.0	2.007e+05	341.91	-70.04	-7804.69	8130.51	1.908e+06
132	88	7.299e+05	-2203.09	-0.03	-420.00	0.0	7.782e+04	1369.28	-0.92	2749.02	-2203.09	6.603e+05
		6.603e+05	-2258.06	5.55e-05	0.0	60.0	7.782e+04	949.28	-0.92	2749.02	-2258.06	7.299e+05
132	95	1.902e+06	1.235e+04	-0.06	-420.00	0.0	2.001e+05	753.59	-70.04	-7825.68	1.235e+04	1.870e+06
		1.870e+06	8146.07	1.09e-04	0.0	60.0	2.001e+05	333.59	-70.04	-7825.68	8146.07	1.902e+06
132	96	7.666e+05	-2309.13	-0.03	-420.00	0.0	8.172e+04	1427.58	-0.95	2914.27	-2309.13	6.936e+05
		6.936e+05	-2366.27	5.82e-05	0.0	60.0	8.172e+04	1007.58	-0.95	2914.27	-2366.27	7.666e+05
132	97	1.822e+06	1.079e+04	-0.06	-420.00	0.0	1.918e+05	873.45	-63.16	-6605.95	1.079e+04	1.782e+06
		1.782e+06	6997.33	1.06e-04	0.0	60.0	1.918e+05	453.45	-63.16	-6605.95	6997.33	1.822e+06
132	98	7.640e+05	-2301.56	-0.03	-420.00	0.0	8.144e+04	1423.41	-0.95	2902.11	-2301.56	6.912e+05
		6.912e+05	-2358.56	5.80e-05	0.0	60.0	8.144e+04	1003.41	-0.95	2902.11	-2358.56	7.640e+05
132	102	7.666e+05	-2309.13	-0.03	-420.00	0.0	8.172e+04	1427.58	-0.95	2914.27	-2309.13	6.936e+05
		6.936e+05	-2366.27	5.82e-05	0.0	60.0	8.172e+04	1007.58	-0.95	2914.27	-2366.27	7.666e+05
133	1	9.427e+05	-2936.98	-0.01	-546.00	0.0	1.028e+05	775.55	-0.12	1158.12	-2936.98	9.126e+05
		9.126e+05	-2944.00	2.43e-05	0.0	60.0	1.028e+05	229.55	-0.12	1158.12	-2944.00	9.427e+05
133	2	2.776e+06	1.267e+04	-0.01	-546.00	0.0	2.818e+05	-4709.45	-151.78	-3.925e+04	1.267e+04	2.776e+06
		2.477e+06	3562.32	3.69e-05	0.0	60.0	2.818e+05	-5255.45	-151.78	-3.925e+04	3562.32	2.477e+06
133	7	7.065e+05	-2203.95	-9.83e-03	-420.00	0.0	7.705e+04	586.60	-0.10	856.51	-2203.95	6.839e+05
		6.839e+05	-2209.75	1.83e-05	0.0	60.0	7.705e+04	166.60	-0.10	856.51	-2209.75	7.065e+05
133	20	2.547e+06	1.340e+04	-0.01	-420.00	0.0	2.561e+05	-4898.37	-151.75	-3.955e+04	1.340e+04	2.547e+06
		2.241e+06	4296.98	3.08e-05	0.0	60.0	2.561e+05	-5318.37	-151.75	-3.955e+04	4296.98	2.241e+06
133	21	7.596e+05	-7078.87	-0.01	-420.00	0.0	8.317e+04	615.48	2.19	409.52	-7078.87	7.358e+05
		7.358e+05	-7164.39	2.95e-05	0.0	60.0	8.317e+04	195.48	2.19	409.52	-7164.39	7.596e+05
133	22	7.598e+05	-7069.27	-0.01	-420.00	0.0	8.316e+04	625.13	2.03	362.19	-7069.27	7.354e+05
		7.354e+05	-7164.61	3.00e-05	0.0	60.0	8.316e+04	205.13	2.03	362.19	-7164.61	7.598e+05
133	23	7.626e+05	2422.59	-0.01	-420.00	0.0	8.284e+04	606.61	-2.19	1548.05	2336.72	7.383e+05
		7.383e+05	2336.72	9.16e-06	0.0	60.0	8.284e+04	186.61	-2.19	1548.05	2422.59	7.626e+05
133	24	7.628e+05	2422.37	-0.01	-420.00	0.0	8.283e+04	616.26	-2.35	1500.72	2346.33	7.379e+05
		7.379e+05	2346.33	9.77e-06	0.0	60.0	8.283e+04	196.26	-2.35	1500.72	2422.37	7.628e+05
133	30	7.598e+05	-6898.18	-0.01	-420.00	0.0	8.316e+04	624.64	-4.60	481.17	-6898.18	7.353e+05
		7.353e+05	-7164.56	4.79e-05	0.0	60.0	8.316e+04	204.64	-4.60	481.17	-7164.56	7.598e+05
133	53	7.606e+05	-4148.54	-0.01	-420.00	0.0	8.306e+04	615.70	0.78	748.03	-4148.54	7.365e+05
		7.365e+05	-4183.75	2.33e-05	0.0	60.0	8.306e+04	195.70	0.78	748.03	-4183.75	7.606e+05
133	54	7.607e+05	-4144.89	-0.01	-420.00	0.0	8.306e+04	619.40	0.72	730.05	-4144.89	7.363e+05
		7.363e+05	-4183.83	2.35e-05	0.0	60.0	8.306e+04	199.40	0.72	730.05	-4183.83	7.607e+05
133	55	7.617e+05	-558.18	-0.01	-420.00	0.0	8.294e+04	612.35	-0.88	1180.19	-587.66	7.374e+05
		7.374e+05	-587.66	1.56e-05	0.0	60.0	8.294e+04	192.35	-0.88	1180.19	-558.18	7.617e+05
133	56	7.618e+05	-558.27	-0.01	-420.00	0.0	8.293e+04	616.05	-0.94	1162.21	-584.00	7.373e+05
		7.373e+05	-584.00	1.59e-05	0.0	60.0	8.293e+04	196.05	-0.94	1162.21	-558.27	7.618e+05
133	62	7.607e+05	-4080.21	-0.01	-420.00	0.0	8.306e+04	619.21	-1.79	774.68	-4080.21	7.363e+05
		7.363e+05	-4183.81	3.03e-05	0.0	60.0	8.306e+04	199.21	-1.79	774.68	-4183.81	7.607e+05
133	85	7.612e+05	-2366.27	-0.01	-420.00	0.0	8.300e+04	615.87	-0.08	955.12	-2366.27	7.369e+05

Trave	Cmb	M3 mx/mn	M2 mx/mn	D 2 / D 3	Q 2 / Q 3	Pos.	N	V 2	V 3	T	M 2	M 3
		7.369e+05	-2371.01	1.96e-05	0.0	60.0	8.300e+04	195.87	-0.08	955.12	-2371.01	7.612e+05
133	86	7.300e+05	-2273.49	-0.01	-420.00	0.0	7.960e+04	599.15	-0.09	899.43	-2273.49	7.066e+05
		7.066e+05	-2278.80	1.88e-05	0.0	60.0	7.960e+04	179.15	-0.09	899.43	-2278.80	7.300e+05
133	87	1.949e+06	8130.51	-0.01	-420.00	0.0	1.990e+05	-3057.52	-101.20	-2.604e+04	8130.51	1.949e+06
		1.753e+06	2058.74	2.72e-05	0.0	60.0	1.990e+05	-3477.52	-101.20	-2.604e+04	2058.74	1.753e+06
133	88	7.248e+05	-2258.06	-0.01	-420.00	0.0	7.904e+04	596.36	-0.09	889.38	-2258.06	7.016e+05
		7.016e+05	-2263.50	1.87e-05	0.0	60.0	7.904e+04	176.36	-0.09	889.38	-2263.50	7.248e+05
133	95	1.944e+06	8146.08	-0.01	-420.00	0.0	1.984e+05	-3060.29	-101.20	-2.605e+04	8146.08	1.944e+06
		1.747e+06	2074.32	2.71e-05	0.0	60.0	1.984e+05	-3480.29	-101.20	-2.605e+04	2074.32	1.747e+06
133	96	7.612e+05	-2366.27	-0.01	-420.00	0.0	8.300e+04	615.87	-0.08	955.12	-2366.27	7.369e+05
		7.369e+05	-2371.01	1.96e-05	0.0	60.0	8.300e+04	195.87	-0.08	955.12	-2371.01	7.612e+05
133	97	1.855e+06	6997.33	-0.01	-420.00	0.0	1.904e+05	-2675.13	-91.08	-2.329e+04	6997.33	1.855e+06
		1.682e+06	1532.78	2.71e-05	0.0	60.0	1.904e+05	-3095.13	-91.08	-2.329e+04	1532.78	1.682e+06
133	98	7.586e+05	-2358.56	-0.01	-420.00	0.0	8.272e+04	614.48	-0.08	950.09	-2358.56	7.343e+05
		7.343e+05	-2363.36	1.95e-05	0.0	60.0	8.272e+04	194.48	-0.08	950.09	-2363.36	7.586e+05
133	102	7.612e+05	-2366.27	-0.01	-420.00	0.0	8.300e+04	615.87	-0.08	955.12	-2366.27	7.369e+05
		7.369e+05	-2371.01	1.96e-05	0.0	60.0	8.300e+04	195.87	-0.08	955.12	-2371.01	7.612e+05
134	2	2.671e+06	3562.33	0.06	-546.00	0.0	2.736e+05	-6051.34	-124.71	-5.811e+04	3562.33	2.671e+06
		2.291e+06	-3920.01	-9.72e-05	0.0	60.0	2.736e+05	-6597.34	-124.71	-5.811e+04	-3920.01	2.291e+06
134	7	7.065e+05	-2209.75	9.83e-03	-420.00	0.0	7.705e+04	-166.90	-0.09	-944.24	-2209.75	7.065e+05
		6.839e+05	-2215.26	-1.75e-05	0.0	60.0	7.705e+04	-586.90	-0.09	-944.24	-2215.26	6.839e+05
134	20	2.435e+06	4296.99	0.06	-420.00	0.0	2.478e+05	-5988.45	-124.69	-5.780e+04	4296.99	2.435e+06
		2.063e+06	-3184.26	-9.13e-05	0.0	60.0	2.478e+05	-6408.45	-124.69	-5.780e+04	-3184.26	2.063e+06
134	21	7.598e+05	-6906.80	0.01	-420.00	0.0	8.316e+04	-204.49	4.47	-520.12	-7164.61	7.598e+05
		7.353e+05	-7164.61	-4.72e-05	0.0	60.0	8.316e+04	-624.49	4.47	-520.12	-6906.80	7.353e+05
134	24	7.626e+05	2422.59	0.01	-420.00	0.0	8.284e+04	-187.12	-4.59	-1470.43	2422.59	7.626e+05
		7.384e+05	2157.38	9.32e-06	0.0	60.0	8.284e+04	-607.12	-4.59	-1470.43	2157.38	7.384e+05
134	30	7.596e+05	-7087.43	0.01	-420.00	0.0	8.317e+04	-195.35	-2.35	-449.06	-7164.34	7.596e+05
		7.358e+05	-7164.34	-2.88e-05	0.0	60.0	8.317e+04	-615.35	-2.35	-449.06	-7087.43	7.358e+05
134	31	7.628e+05	2422.32	0.01	-420.00	0.0	8.283e+04	-196.26	2.23	-1541.49	2422.32	7.628e+05
		7.379e+05	2338.01	-9.22e-06	0.0	60.0	8.283e+04	-616.26	2.23	-1541.49	2338.01	7.379e+05
134	53	7.607e+05	-4088.72	0.01	-420.00	0.0	8.306e+04	-199.11	1.65	-814.38	-4183.83	7.607e+05
		7.363e+05	-4183.83	-2.97e-05	0.0	60.0	8.306e+04	-619.11	1.65	-814.38	-4088.72	7.363e+05
134	56	7.617e+05	-558.18	0.01	-420.00	0.0	8.294e+04	-192.50	-1.77	-1176.16	-558.18	7.617e+05
		7.375e+05	-660.70	-8.27e-06	0.0	60.0	8.294e+04	-612.50	-1.77	-1176.16	-660.70	7.375e+05
134	62	7.606e+05	-4157.03	0.01	-420.00	0.0	8.306e+04	-195.60	-0.93	-787.95	-4183.73	7.606e+05
		7.365e+05	-4183.73	-2.27e-05	0.0	60.0	8.306e+04	-615.60	-0.93	-787.95	-4157.03	7.365e+05
134	63	7.618e+05	-558.29	0.01	-420.00	0.0	8.293e+04	-196.01	0.80	-1202.60	-558.29	7.618e+05
		7.373e+05	-592.39	-1.53e-05	0.0	60.0	8.293e+04	-616.01	0.80	-1202.60	-592.39	7.373e+05
134	85	7.612e+05	-2371.01	0.01	-420.00	0.0	8.300e+04	-195.81	-0.06	-995.27	-2371.01	7.612e+05
		7.369e+05	-2374.71	-1.90e-05	0.0	60.0	8.300e+04	-615.81	-0.06	-995.27	-2374.71	7.369e+05
134	87	1.882e+06	2058.75	0.04	-420.00	0.0	1.934e+05	-4060.34	-83.15	-3.887e+04	2058.75	1.882e+06
		1.626e+06	-2929.97	-6.73e-05	0.0	60.0	1.934e+05	-4480.34	-83.15	-3.887e+04	-2929.97	1.626e+06
134	88	7.248e+05	-2263.50	0.01	-420.00	0.0	7.904e+04	-176.53	-0.08	-961.25	-2263.50	7.248e+05
		7.016e+05	-2268.41	-1.80e-05	0.0	60.0	7.904e+04	-596.53	-0.08	-961.25	-2268.41	7.016e+05
134	95	1.877e+06	2074.33	0.04	-420.00	0.0	1.929e+05	-4057.57	-83.15	-3.886e+04	2074.33	1.877e+06
		1.621e+06	-2914.41	-6.72e-05	0.0	60.0	1.929e+05	-4477.57	-83.15	-3.886e+04	-2914.41	1.621e+06
134	97	1.798e+06	1532.79	0.04	-420.00	0.0	1.855e+05	-3688.75	-74.82	-3.511e+04	1532.79	1.798e+06
		1.564e+06	-2956.54	-6.32e-05	0.0	60.0	1.855e+05	-4108.75	-74.82	-3.511e+04	-2956.54	1.564e+06
134	98	7.586e+05	-2363.36	0.01	-420.00	0.0	8.272e+04	-194.43	-0.06	-993.13	-2363.36	7.586e+05
		7.343e+05	-2367.17	-1.89e-05	0.0	60.0	8.272e+04	-614.43	-0.06	-993.13	-2367.17	7.343e+05
134	102	7.612e+05	-2371.01	0.01	-420.00	0.0	8.300e+04	-195.81	-0.06	-995.27	-2371.01	7.612e+05
		7.369e+05	-2374.71	-1.90e-05	0.0	60.0	8.300e+04	-615.81	-0.06	-995.27	-2374.71	7.369e+05
135	2	2.546e+06	-3920.00	0.13	-546.00	0.0	2.626e+05	-7583.94	-59.61	-6.889e+04	-3920.00	2.546e+06
		2.075e+06	-7496.77	-2.32e-04	0.0	60.0	2.626e+05	-8129.94	-59.61	-6.889e+04	-7496.77	2.075e+06
135	7	7.116e+05	-2172.82	0.03	-420.00	0.0	7.587e+04	-920.46	0.71	-2747.63	-2215.26	7.116e+05
		6.437e+05	-2215.26	-5.34e-05	0.0	60.0	7.587e+04	-1340.46	0.71	-2747.63	-2172.82	6.437e+05
135	19	7.116e+05	-2171.68	0.03	-420.00	0.0	7.587e+04	-920.42	0.71	-2744.38	-2214.54	7.116e+05
		6.437e+05	-2214.54	-5.34e-05	0.0	60.0	7.587e+04	-1340.42	0.71	-2744.38	-2171.68	6.437e+05
135	30	7.652e+05	-6629.31	0.03	-420.00	0.0	8.190e+04	-1013.27	8.55	-1692.08	-7087.43	7.652e+05
		6.923e+05	-7087.43	-1.05e-04	0.0	60.0	8.190e+04	-1433.27	8.55	-1692.08	-6629.31	6.923e+05
135	31	7.681e+05	2338.01	0.03	-420.00	0.0	8.154e+04	-1001.82	-6.92	-4208.21	2338.01	7.681e+05
		6.949e+05	1977.57	-9.91e-06	0.0	60.0	8.154e+04	-1421.82	-6.92	-4208.21	1977.57	6.949e+05
135	33	7.653e+05	-6630.43	0.03	-420.00	0.0	8.187e+04	-1021.96	8.54	-1692.19	-7088.02	7.653e+05
		6.929e+05	-7088.02	-1.05e-04	0.0	60.0	8.187e+04	-1441.96	8.54	-1692.19	-6630.43	6.929e+05
135	36	7.680e+05	2338.60	0.03	-420.00	0.0	8.157e+04	-993.14	-6.91	-4208.09	2338.60	7.680e+05
		6.942e+05	1978.68	-9.95e-06	0.0	60.0	8.157e+04	-1413.14	-6.91	-4208.09	1978.68	6.942e+05
135	38	7.660e+05	-3546.34	0.03	-420.00	0.0	8.181e+04	-995.91	3.57	-2676.47	-3751.72	7.660e+05
		6.922e+05	-3751.72	-7.60e-05	0.0	60.0	8.181e+04	-1415.91	3.57	-2676.47	-3546.34	6.922e+05
135	62	7.661e+05	-3953.61	0.03	-420.00	0.0	8.179e+04	-1009.67	3.73	-2471.84	-4157.03	7.661e+05
		6.931e+05	-4157.03	-7.57e-05	0.0	60.0	8.179e+04	-1429.67	3.73	-2471.84	-3953.61	6.931e+05
135	63	7.672e+05	-592.39	0.03	-420.00	0.0	8.165e+04	-1005.42	-2.11	-3428.45	-592.39	7.672e+05
		6.941e+05	-698.14	-3.96e-05	0.0	60.0	8.165e+04	-1425.42	-2.11	-3428.45	-698.14	6.941e+05
135	65	7.661e+05	-3954.03	0.03	-420.00	0.0	8.178e+04	-1013.00	3.73	-2471.88	-4157.25	7.661e+05
		6.933e+05	-4157.25	-7.57e-05	0.0	60.0	8.178e+04	-1433.00	3.73	-2471.88	-3954.03	6.933e+05

Trave	Cmb	M3 mx/mn	M2 mx/mn	D 2 / D 3	Q 2 / Q 3	Pos.	N	V 2	V 3	T	M 2	M 3
135	68	7.671e+05	-592.16	0.03	-420.00	0.0	8.166e+04	-1002.09	-2.10	-3428.41	-592.16	7.671e+05
		6.938e+05	-697.71	-3.96e-05	0.0	60.0	8.166e+04	-1422.09	-2.10	-3428.41	-697.71	6.938e+05
135	70	7.664e+05	-2787.61	0.03	-420.00	0.0	8.176e+04	-1003.06	1.86	-2845.86	-2895.54	7.664e+05
		6.930e+05	-2895.54	-6.46e-05	0.0	60.0	8.176e+04	-1423.06	1.86	-2845.86	-2787.61	6.930e+05
135	85	7.666e+05	-2325.87	0.03	-420.00	0.0	8.172e+04	-1007.55	0.81	-2950.14	-2374.71	7.666e+05
		6.936e+05	-2374.71	-5.77e-05	0.0	60.0	8.172e+04	-1427.55	0.81	-2950.14	-2325.87	6.936e+05
135	87	1.800e+06	-2929.96	0.09	-420.00	0.0	1.860e+05	-5190.30	-39.63	-4.632e+04	-2929.96	1.800e+06
		1.476e+06	-5307.96	-1.63e-04	0.0	60.0	1.860e+05	-5610.30	-39.63	-4.632e+04	-5307.96	1.476e+06
135	88	7.299e+05	-2223.84	0.03	-420.00	0.0	7.782e+04	-949.49	0.74	-2815.14	-2268.41	7.299e+05
		6.603e+05	-2268.41	-5.48e-05	0.0	60.0	7.782e+04	-1369.49	0.74	-2815.14	-2223.84	6.603e+05
135	94	7.299e+05	-2223.08	0.03	-420.00	0.0	7.782e+04	-949.46	0.75	-2812.97	-2267.93	7.299e+05
		6.604e+05	-2267.93	-5.48e-05	0.0	60.0	7.782e+04	-1369.46	0.75	-2812.97	-2223.08	6.604e+05
135	97	1.725e+06	-2956.53	0.09	-420.00	0.0	1.786e+05	-4816.82	-35.53	-4.209e+04	-2956.53	1.725e+06
		1.423e+06	-5088.61	-1.54e-04	0.0	60.0	1.786e+05	-5236.82	-35.53	-4.209e+04	-5088.61	1.423e+06
135	98	7.640e+05	-2318.67	0.03	-420.00	0.0	8.144e+04	-1003.40	0.81	-2940.73	-2367.17	7.640e+05
		6.912e+05	-2367.17	-5.74e-05	0.0	60.0	8.144e+04	-1423.40	0.81	-2940.73	-2318.67	6.912e+05
135	101	7.640e+05	-2318.29	0.03	-420.00	0.0	8.144e+04	-1003.39	0.81	-2939.65	-2366.93	7.640e+05
		6.912e+05	-2366.93	-5.75e-05	0.0	60.0	8.144e+04	-1423.39	0.81	-2939.65	-2318.29	6.912e+05
135	102	7.666e+05	-2325.87	0.03	-420.00	0.0	8.172e+04	-1007.55	0.81	-2950.14	-2374.71	7.666e+05
		6.936e+05	-2374.71	-5.77e-05	0.0	60.0	8.172e+04	-1427.55	0.81	-2950.14	-2325.87	6.936e+05
136	2	2.388e+06	-7496.76	0.19	-546.00	0.0	2.492e+05	-9205.69	-3.38	-7.416e+04	-7496.76	2.388e+06
		1.820e+06	-7699.41	-3.51e-04	0.0	60.0	2.492e+05	-9751.69	-3.38	-7.416e+04	-7699.41	1.820e+06
136	7	6.990e+05	-1927.00	0.05	-420.00	0.0	7.349e+04	-1674.24	4.10	-4571.66	-2172.82	6.990e+05
		5.859e+05	-2172.82	-8.93e-05	0.0	60.0	7.349e+04	-2094.24	4.10	-4571.66	-1927.00	5.859e+05
136	19	6.990e+05	-1925.29	0.05	-420.00	0.0	7.349e+04	-1674.21	4.11	-4569.51	-2171.68	6.990e+05
		5.859e+05	-2171.68	-8.94e-05	0.0	60.0	7.349e+04	-2094.21	4.11	-4569.51	-1925.29	5.859e+05
136	30	7.518e+05	-5676.31	0.05	-420.00	0.0	7.934e+04	-1830.06	17.16	-3097.60	-6629.31	7.518e+05
		6.302e+05	-6629.31	-1.80e-04	0.0	60.0	7.934e+04	-2250.06	17.16	-3097.60	-5676.31	6.302e+05
136	31	7.544e+05	1977.57	0.05	-420.00	0.0	7.898e+04	-1809.07	-8.19	-6761.34	1977.57	7.544e+05
		6.324e+05	1562.60	-1.30e-05	0.0	60.0	7.898e+04	-2229.07	-8.19	-6761.34	1562.60	6.324e+05
136	33	7.522e+05	-5677.84	0.05	-420.00	0.0	7.930e+04	-1836.95	17.15	-3097.68	-6630.43	7.522e+05
		6.311e+05	-6630.43	-1.80e-04	0.0	60.0	7.930e+04	-2256.95	17.15	-3097.68	-5677.84	6.311e+05
136	36	7.540e+05	1978.68	0.05	-420.00	0.0	7.903e+04	-1802.18	-8.19	-6761.27	1978.68	7.540e+05
		6.316e+05	1564.13	-1.30e-05	0.0	60.0	7.903e+04	-2222.18	-8.19	-6761.27	1564.13	6.316e+05
136	38	7.521e+05	-3044.75	0.05	-420.00	0.0	7.927e+04	-1812.12	8.64	-4463.66	-3546.34	7.521e+05
		6.297e+05	-3546.34	-1.25e-04	0.0	60.0	7.927e+04	-2232.12	8.64	-4463.66	-3044.75	6.297e+05
136	62	7.526e+05	-3426.13	0.05	-420.00	0.0	7.923e+04	-1823.48	9.27	-4231.63	-3953.61	7.526e+05
		6.309e+05	-3953.61	-1.28e-04	0.0	60.0	7.923e+04	-2243.48	9.27	-4231.63	-3426.13	6.309e+05
136	63	7.536e+05	-687.58	0.05	-420.00	0.0	7.910e+04	-1815.64	-0.30	-5627.32	-698.14	7.536e+05
		6.317e+05	-698.14	-6.48e-05	0.0	60.0	7.910e+04	-2235.64	-0.30	-5627.32	-687.58	6.317e+05
136	65	7.527e+05	-3426.72	0.05	-420.00	0.0	7.922e+04	-1826.13	9.27	-4231.66	-3954.04	7.527e+05
		6.312e+05	-3954.04	-1.28e-04	0.0	60.0	7.922e+04	-2246.13	9.27	-4231.66	-3426.72	6.312e+05
136	68	7.534e+05	-686.99	0.05	-420.00	0.0	7.911e+04	-1813.00	-0.30	-5627.29	-697.71	7.534e+05
		6.314e+05	-697.71	-6.48e-05	0.0	60.0	7.911e+04	-2233.00	-0.30	-5627.29	-686.99	6.314e+05
136	70	7.527e+05	-2430.75	0.05	-420.00	0.0	7.921e+04	-1816.68	6.05	-4751.74	-2787.61	7.527e+05
		6.307e+05	-2787.61	-1.07e-04	0.0	60.0	7.921e+04	-2236.68	6.05	-4751.74	-2430.75	6.307e+05
136	85	7.531e+05	-2056.85	0.05	-420.00	0.0	7.916e+04	-1819.56	4.48	-4929.47	-2325.87	7.531e+05
		6.313e+05	-2325.87	-9.64e-05	0.0	60.0	7.916e+04	-2239.56	4.48	-4929.47	-2056.85	6.313e+05
136	87	1.693e+06	-5307.96	0.13	-420.00	0.0	1.767e+05	-6379.73	-1.65	-5.010e+04	-5307.96	1.693e+06
		1.297e+06	-5407.19	-2.47e-04	0.0	60.0	1.767e+05	-6799.73	-1.65	-5.010e+04	-5407.19	1.297e+06
136	88	7.170e+05	-1970.29	0.05	-420.00	0.0	7.538e+04	-1722.68	4.23	-4690.93	-2223.84	7.170e+05
		6.011e+05	-2223.84	-9.17e-05	0.0	60.0	7.538e+04	-2142.68	4.23	-4690.93	-1970.29	6.011e+05
136	94	7.170e+05	-1969.15	0.05	-420.00	0.0	7.538e+04	-1722.66	4.23	-4689.50	-2223.08	7.170e+05
		6.011e+05	-2223.08	-9.17e-05	0.0	60.0	7.538e+04	-2142.66	4.23	-4689.50	-1969.15	6.011e+05
136	97	1.627e+06	-5088.61	0.13	-420.00	0.0	1.698e+05	-5998.46	-0.84	-4.577e+04	-5088.61	1.627e+06
		1.254e+06	-5139.16	-2.36e-04	0.0	60.0	1.698e+05	-6418.46	-0.84	-4.577e+04	-5139.16	1.254e+06
136	98	7.505e+05	-2050.79	0.05	-420.00	0.0	7.889e+04	-1812.64	4.46	-4912.59	-2318.67	7.505e+05
		6.292e+05	-2318.67	-9.60e-05	0.0	60.0	7.889e+04	-2232.64	4.46	-4912.59	-2050.79	6.292e+05
136	101	7.505e+05	-2050.22	0.05	-420.00	0.0	7.889e+04	-1812.63	4.47	-4911.87	-2318.29	7.505e+05
		6.292e+05	-2318.29	-9.60e-05	0.0	60.0	7.889e+04	-2232.63	4.47	-4911.87	-2050.22	6.292e+05
136	102	7.531e+05	-2056.85	0.05	-420.00	0.0	7.916e+04	-1819.56	4.48	-4929.47	-2325.87	7.531e+05
		6.313e+05	-2325.87	-9.64e-05	0.0	60.0	7.916e+04	-2239.56	4.48	-4929.47	-2056.85	6.313e+05
137	2	2.192e+06	-4673.65	0.25	-546.00	0.0	2.332e+05	-1.085e+04	50.43	-7.677e+04	-7699.41	2.192e+06
		1.525e+06	-7699.41	-4.49e-04	0.0	60.0	2.332e+05	-1.139e+04	50.43	-7.677e+04	-4673.65	1.525e+06
137	7	6.688e+05	-1189.40	0.07	-420.00	0.0	6.993e+04	-2428.77	12.29	-6445.14	-1927.00	6.688e+05
		5.105e+05	-1927.00	-1.24e-04	0.0	60.0	6.993e+04	-2848.77	12.29	-6445.14	-1189.40	5.105e+05
137	19	6.688e+05	-1186.95	0.07	-420.00	0.0	6.994e+04	-2428.74	12.31	-6444.51	-1925.30	6.688e+05
		5.105e+05	-1925.30	-1.24e-04	0.0	60.0	6.994e+04	-2848.74	12.31	-6444.51	-1186.95	5.105e+05
137	30	7.196e+05	-4005.33	0.07	-420.00	0.0	7.551e+04	-2645.03	29.59	-4795.90	-5676.32	7.196e+05
		5.489e+05	-5676.32	-2.48e-04	0.0	60.0	7.551e+04	-3065.03	29.59	-4795.90	-4005.33	5.489e+05
137	31	7.216e+05	1562.60	0.07	-420.00	0.0	7.515e+04	-2619.80	-2.92	-9133.70	1562.60	7.216e+05
		5.512e+05	1491.66	-1.88e-05	0.0	60.0	7.515e+04	-3039.80	-2.92	-9133.70	1491.66	5.512e+05
137	33	7.202e+05	-4007.12	0.07	-420.00	0.0	7.546e+04	-2649.45	29.58	-4795.95	-5677.84	7.202e+05
		5.498e+05	-5677.84	-2.48e-04	0.0	60.0	7.546e+04	-3069.45	29.58	-4795.95	-4007.12	5.498e+05
137	36	7.209e+05	1564.13	0.07	-420.00	0.0	7.520e+04	-2615.38	-2.92	-9133.65	1564.13	7.209e+05

Trave	Cmb	M3 mx/mn	M2 mx/mn	D 2 / D 3	Q 2 / Q 3	Pos.	N	V 2	V 3	T	M 2	M 3
		5.503e+05	1493.44	-1.88e-05	0.0	60.0	7.520e+04	-3035.38	-2.92	-9133.65	1493.44	5.503e+05
137	38	7.193e+05	-1967.04	0.07	-420.00	0.0	7.546e+04	-2629.42	18.44	-6369.09	-3044.75	7.193e+05
		5.483e+05	-3044.75	-1.70e-04	0.0	60.0	7.546e+04	-3049.42	18.44	-6369.09	-1967.04	5.483e+05
137	39	7.219e+05	-546.63	0.07	-420.00	0.0	7.521e+04	-2635.42	8.23	-7560.52	-1068.96	7.219e+05
		5.518e+05	-1068.96	-9.71e-05	0.0	60.0	7.521e+04	-3055.42	8.23	-7560.52	-546.63	5.518e+05
137	62	7.202e+05	-2296.83	0.07	-420.00	0.0	7.540e+04	-2637.15	19.47	-6135.83	-3426.14	7.202e+05
		5.496e+05	-3426.14	-1.77e-04	0.0	60.0	7.540e+04	-3057.15	19.47	-6135.83	-2296.83	5.496e+05
137	63	7.210e+05	-216.84	0.07	-420.00	0.0	7.526e+04	-2627.69	7.19	-7793.77	-687.58	7.210e+05
		5.505e+05	-687.58	-9.02e-05	0.0	60.0	7.526e+04	-3047.69	7.19	-7793.77	-216.84	5.505e+05
137	65	7.204e+05	-2297.52	0.07	-420.00	0.0	7.538e+04	-2638.84	19.47	-6135.84	-3426.72	7.204e+05
		5.499e+05	-3426.72	-1.77e-04	0.0	60.0	7.538e+04	-3058.84	19.47	-6135.84	-2297.52	5.499e+05
137	68	7.207e+05	-216.15	0.07	-420.00	0.0	7.528e+04	-2625.99	7.20	-7793.76	-686.99	7.207e+05
		5.501e+05	-686.99	-9.02e-05	0.0	60.0	7.528e+04	-3045.99	7.20	-7793.76	-216.15	5.501e+05
137	70	7.201e+05	-1525.80	0.07	-420.00	0.0	7.538e+04	-2631.24	15.26	-6736.83	-2430.75	7.201e+05
		5.494e+05	-2430.75	-1.47e-04	0.0	60.0	7.538e+04	-3051.24	15.26	-6736.83	-1525.80	5.494e+05
137	71	7.211e+05	-987.87	0.07	-420.00	0.0	7.528e+04	-2633.60	11.40	-7192.77	-1682.96	7.211e+05
		5.507e+05	-1682.96	-1.20e-04	0.0	60.0	7.528e+04	-3053.60	11.40	-7192.77	-987.87	5.507e+05
137	85	7.206e+05	-1256.84	0.07	-420.00	0.0	7.533e+04	-2632.42	13.33	-6964.80	-2056.86	7.206e+05
		5.500e+05	-2056.86	-1.34e-04	0.0	60.0	7.533e+04	-3052.42	13.33	-6964.80	-1256.84	5.500e+05
137	87	1.558e+06	-3283.34	0.17	-420.00	0.0	1.655e+05	-7583.43	35.40	-5.211e+04	-5407.18	1.558e+06
		1.090e+06	-5407.18	-3.17e-04	0.0	60.0	1.655e+05	-8003.43	35.40	-5.211e+04	-3283.34	1.090e+06
137	88	6.861e+05	-1211.88	0.07	-420.00	0.0	7.173e+04	-2496.65	12.64	-6618.36	-1970.29	6.861e+05
		5.237e+05	-1970.29	-1.27e-04	0.0	60.0	7.173e+04	-2916.65	12.64	-6618.36	-1211.88	5.237e+05
137	94	6.861e+05	-1210.25	0.07	-420.00	0.0	7.173e+04	-2496.63	12.65	-6617.94	-1969.15	6.861e+05
		5.237e+05	-1969.15	-1.27e-04	0.0	60.0	7.173e+04	-2916.63	12.65	-6617.94	-1210.25	5.237e+05
137	97	1.501e+06	-3115.69	0.17	-420.00	0.0	1.592e+05	-7193.07	33.72	-4.786e+04	-5139.15	1.501e+06
		1.056e+06	-5139.15	-3.04e-04	0.0	60.0	1.592e+05	-7613.07	33.72	-4.786e+04	-3115.69	1.056e+06
137	98	7.181e+05	-1253.80	0.07	-420.00	0.0	7.507e+04	-2622.72	13.28	-6940.10	-2050.80	7.181e+05
		5.481e+05	-2050.80	-1.33e-04	0.0	60.0	7.507e+04	-3042.72	13.28	-6940.10	-1253.80	5.481e+05
137	101	7.181e+05	-1252.98	0.07	-420.00	0.0	7.507e+04	-2622.71	13.29	-6939.89	-2050.23	7.181e+05
		5.481e+05	-2050.23	-1.33e-04	0.0	60.0	7.507e+04	-3042.71	13.29	-6939.89	-1252.98	5.481e+05
137	102	7.206e+05	-1256.84	0.07	-420.00	0.0	7.533e+04	-2632.42	13.33	-6964.80	-2056.86	7.206e+05
		5.500e+05	-2056.86	-1.34e-04	0.0	60.0	7.533e+04	-3052.42	13.33	-6964.80	-1256.84	5.500e+05
138	2	1.958e+06	2210.01	0.30	-546.00	0.0	2.146e+05	-1.249e+04	114.73	-7.863e+04	-4673.64	1.958e+06
		1.192e+06	-4673.64	-5.13e-04	0.0	60.0	2.146e+05	-1.303e+04	114.73	-7.863e+04	2210.01	1.192e+06
138	7	6.209e+05	448.82	0.08	-420.00	0.0	6.519e+04	-3185.01	27.30	-8383.01	-1189.41	6.209e+05
		4.172e+05	-1189.41	-1.53e-04	0.0	60.0	6.519e+04	-3605.01	27.30	-8383.01	448.82	4.172e+05
138	30	6.680e+05	-1302.07	0.09	-420.00	0.0	7.039e+04	-3459.00	47.67	-6808.72	-4005.34	6.680e+05
		4.482e+05	-4005.34	-3.07e-04	0.0	60.0	7.039e+04	-3879.00	47.67	-6808.72	-1302.07	4.482e+05
138	31	6.700e+05	2330.39	0.09	-420.00	0.0	7.005e+04	-3435.44	11.36	-1.134e+04	1491.66	6.700e+05
		4.510e+05	1491.66	-2.25e-05	0.0	60.0	7.005e+04	-3855.44	11.36	-1.134e+04	2330.39	4.510e+05
138	33	6.689e+05	-1303.92	0.09	-420.00	0.0	7.033e+04	-3460.51	47.66	-6808.76	-4007.12	6.689e+05
		4.491e+05	-4007.12	-3.05e-04	0.0	60.0	7.033e+04	-3880.51	47.66	-6808.76	-1303.92	4.491e+05
138	36	6.692e+05	2332.24	0.09	-420.00	0.0	7.010e+04	-3433.93	11.38	-1.134e+04	1493.44	6.692e+05
		4.501e+05	1493.44	-2.45e-05	0.0	60.0	7.010e+04	-3853.93	11.38	-1.134e+04	2332.24	4.501e+05
138	42	6.675e+05	-75.58	0.09	-420.00	0.0	7.036e+04	-3448.45	34.99	-8404.39	-2125.11	6.675e+05
		4.478e+05	-2125.11	-2.13e-04	0.0	60.0	7.036e+04	-3868.45	34.99	-8404.39	-75.58	4.478e+05
138	43	6.706e+05	1103.90	0.09	-420.00	0.0	7.008e+04	-3445.99	24.05	-9739.86	-388.57	6.706e+05
		4.514e+05	-388.57	-1.16e-04	0.0	60.0	7.008e+04	-3865.99	24.05	-9739.86	1103.90	4.514e+05
138	62	6.687e+05	-173.09	0.09	-420.00	0.0	7.028e+04	-3451.65	36.38	-8202.21	-2296.84	6.687e+05
		4.491e+05	-2296.84	-2.19e-04	0.0	60.0	7.028e+04	-3871.65	36.38	-8202.21	-173.09	4.491e+05
138	63	6.694e+05	1201.41	0.09	-420.00	0.0	7.015e+04	-3442.79	22.65	-9942.05	-216.84	6.694e+05
		4.502e+05	-216.84	-1.11e-04	0.0	60.0	7.015e+04	-3862.79	22.65	-9942.05	1201.41	4.502e+05
138	65	6.690e+05	-173.80	0.09	-420.00	0.0	7.026e+04	-3452.23	36.37	-8202.22	-2297.52	6.690e+05
		4.494e+05	-2297.52	-2.18e-04	0.0	60.0	7.026e+04	-3872.23	36.37	-8202.22	-173.80	4.494e+05
138	68	6.691e+05	1202.12	0.09	-420.00	0.0	7.018e+04	-3442.21	22.66	-9942.04	-216.15	6.691e+05
		4.498e+05	-216.15	-1.12e-04	0.0	60.0	7.018e+04	-3862.21	22.66	-9942.04	1202.12	4.498e+05
138	74	6.685e+05	290.89	0.09	-420.00	0.0	7.027e+04	-3447.67	31.58	-8815.44	-1585.49	6.685e+05
		4.489e+05	-1585.49	-1.83e-04	0.0	60.0	7.027e+04	-3867.67	31.58	-8815.44	290.89	4.489e+05
138	75	6.696e+05	737.42	0.09	-420.00	0.0	7.017e+04	-3446.78	27.45	-9328.82	-928.19	6.696e+05
		4.503e+05	-928.19	-1.46e-04	0.0	60.0	7.017e+04	-3866.78	27.45	-9328.82	737.42	4.503e+05
138	85	6.690e+05	514.16	0.09	-420.00	0.0	7.022e+04	-3447.22	29.52	-9072.13	-1256.84	6.690e+05
		4.496e+05	-1256.84	-1.65e-04	0.0	60.0	7.022e+04	-3867.22	29.52	-9072.13	514.16	4.496e+05
138	87	1.394e+06	1541.89	0.21	-420.00	0.0	1.524e+05	-8785.44	80.42	-5.363e+04	-3283.34	1.394e+06
		8.547e+05	-3283.34	-3.64e-04	0.0	60.0	1.524e+05	-9205.44	80.42	-5.363e+04	1541.89	8.547e+05
138	88	6.370e+05	470.60	0.08	-420.00	0.0	6.687e+04	-3272.42	28.04	-8612.72	-1211.88	6.370e+05
		4.280e+05	-1211.88	-1.57e-04	0.0	60.0	6.687e+04	-3692.42	28.04	-8612.72	470.60	4.280e+05
138	97	1.347e+06	1472.29	0.20	-420.00	0.0	1.468e+05	-8386.47	76.47	-4.953e+04	-3115.68	1.347e+06
		8.309e+05	-3115.68	-3.50e-04	0.0	60.0	1.468e+05	-8806.47	76.47	-4.953e+04	1472.29	8.309e+05
138	98	6.668e+05	510.81	0.09	-420.00	0.0	6.998e+04	-3434.74	29.41	-9039.22	-1253.80	6.668e+05
		4.481e+05	-1253.80	-1.64e-04	0.0	60.0	6.998e+04	-3854.74	29.41	-9039.22	510.81	4.481e+05
138	102	6.690e+05	514.16	0.09	-420.00	0.0	7.022e+04	-3447.22	29.52	-9072.13	-1256.84	6.690e+05
		4.496e+05	-1256.84	-1.65e-04	0.0	60.0	7.022e+04	-3867.22	29.52	-9072.13	514.16	4.496e+05
139	2	1.685e+06	1.350e+04	0.34	-546.00	0.0	1.934e+05	-1.412e+04	188.18	-8.034e+04	2210.01	1.685e+06
		8.212e+05	2210.01	-5.14e-04	0.0	60.0	1.934e+05	-1.467e+04	188.18	-8.034e+04	1.350e+04	8.212e+05

Trave	Cmb	M3 mx/mn	M2 mx/mn	D 2 / D 3	Q 2 / Q 3	Pos.	N	V 2	V 3	T	M 2	M 3
139	7	5.553e+05	3330.17	0.09	-420.00	0.0	5.926e+04	-3944.20	48.02	-1.029e+04	448.82	5.553e+05
		3.061e+05	448.82	-1.67e-04	0.0	60.0	5.926e+04	-4364.20	48.02	-1.029e+04	3330.17	3.061e+05
139	30	5.990e+05	2573.62	0.10	-420.00	0.0	6.398e+04	-4272.64	69.85	-8949.21	-1302.08	5.990e+05
		3.282e+05	-1302.08	-3.38e-04	0.0	60.0	6.398e+04	-4692.64	69.85	-8949.21	2573.62	3.282e+05
139	31	5.977e+05	4671.04	0.10	-420.00	0.0	6.367e+04	-4258.00	33.75	-1.335e+04	2330.39	5.977e+05
		3.315e+05	2330.39	-2.17e-05	0.0	60.0	6.367e+04	-4678.00	33.75	-1.335e+04	4671.04	3.315e+05
139	33	5.999e+05	2571.90	0.10	-420.00	0.0	6.393e+04	-4274.19	69.81	-8949.14	-1303.93	5.999e+05
		3.290e+05	-1303.93	-3.39e-04	0.0	60.0	6.393e+04	-4694.19	69.81	-8949.14	2571.90	3.290e+05
139	36	5.968e+05	4672.76	0.10	-420.00	0.0	6.373e+04	-4256.46	33.80	-1.335e+04	2332.24	5.968e+05
		3.307e+05	2332.24	-2.16e-05	0.0	60.0	6.373e+04	-4676.46	33.80	-1.335e+04	4672.76	3.307e+05
139	41	6.002e+05	3356.47	0.10	-420.00	0.0	6.377e+04	-4270.33	57.13	-1.047e+04	23.03	6.002e+05
		3.309e+05	23.03	-2.28e-04	0.0	60.0	6.377e+04	-4690.33	57.13	-1.047e+04	3356.47	3.309e+05
139	42	5.972e+05	3267.01	0.10	-420.00	0.0	6.396e+04	-4265.17	57.29	-1.050e+04	-75.59	5.972e+05
		3.281e+05	-75.59	-2.27e-04	0.0	60.0	6.396e+04	-4685.17	57.29	-1.050e+04	3267.01	3.281e+05
139	62	5.986e+05	3226.13	0.10	-420.00	0.0	6.389e+04	-4268.08	58.63	-1.030e+04	-173.09	5.986e+05
		3.292e+05	-173.09	-2.40e-04	0.0	60.0	6.389e+04	-4688.08	58.63	-1.030e+04	3226.13	3.292e+05
139	63	5.981e+05	4018.52	0.10	-420.00	0.0	6.377e+04	-4262.56	44.98	-1.200e+04	1201.41	5.981e+05
		3.305e+05	1201.41	-1.20e-04	0.0	60.0	6.377e+04	-4682.56	44.98	-1.200e+04	4018.52	3.305e+05
139	65	5.990e+05	3225.47	0.10	-420.00	0.0	6.387e+04	-4268.68	58.61	-1.030e+04	-173.80	5.990e+05
		3.296e+05	-173.80	-2.40e-04	0.0	60.0	6.387e+04	-4688.68	58.61	-1.030e+04	3225.47	3.296e+05
139	68	5.978e+05	4019.19	0.10	-420.00	0.0	6.379e+04	-4261.97	45.00	-1.200e+04	1202.12	5.978e+05
		3.302e+05	1202.12	-1.20e-04	0.0	60.0	6.379e+04	-4681.97	45.00	-1.200e+04	4019.19	3.302e+05
139	73	5.991e+05	3522.04	0.10	-420.00	0.0	6.381e+04	-4267.23	53.82	-1.089e+04	328.45	5.991e+05
		3.302e+05	328.45	-1.98e-04	0.0	60.0	6.381e+04	-4687.23	53.82	-1.089e+04	3522.04	3.302e+05
139	74	5.979e+05	3487.97	0.10	-420.00	0.0	6.388e+04	-4265.25	53.88	-1.090e+04	290.89	5.979e+05
		3.292e+05	290.89	-1.98e-04	0.0	60.0	6.388e+04	-4685.25	53.88	-1.090e+04	3487.97	3.292e+05
139	85	5.984e+05	3622.33	0.10	-420.00	0.0	6.383e+04	-4265.32	51.80	-1.115e+04	514.16	5.984e+05
		3.299e+05	514.16	-1.80e-04	0.0	60.0	6.383e+04	-4685.32	51.80	-1.115e+04	3622.33	3.299e+05
139	87	1.203e+06	9483.65	0.24	-420.00	0.0	1.374e+05	-9983.93	132.36	-5.504e+04	1541.90	1.203e+06
		5.915e+05	1541.90	-3.67e-04	0.0	60.0	1.374e+05	-1.040e+04	132.36	-5.504e+04	9483.65	5.915e+05
139	88	5.697e+05	3427.55	0.10	-420.00	0.0	6.078e+04	-4051.24	49.28	-1.058e+04	470.60	5.697e+05
		3.140e+05	470.60	-1.71e-04	0.0	60.0	6.078e+04	-4471.24	49.28	-1.058e+04	3427.55	3.140e+05
139	97	1.165e+06	9047.24	0.23	-420.00	0.0	1.324e+05	-9577.21	126.25	-5.109e+04	1472.29	1.165e+06
		5.775e+05	1472.29	-3.55e-04	0.0	60.0	1.324e+05	-9997.21	126.25	-5.109e+04	9047.24	5.775e+05
139	98	5.963e+05	3608.12	0.10	-420.00	0.0	6.361e+04	-4250.03	51.62	-1.111e+04	510.81	5.963e+05
		3.287e+05	510.81	-1.79e-04	0.0	60.0	6.361e+04	-4670.03	51.62	-1.111e+04	3608.12	3.287e+05
139	102	5.984e+05	3622.33	0.10	-420.00	0.0	6.383e+04	-4265.32	51.80	-1.115e+04	514.16	5.984e+05
		3.299e+05	514.16	-1.80e-04	0.0	60.0	6.383e+04	-4685.32	51.80	-1.115e+04	3622.33	3.299e+05
140	2	1.374e+06	2.740e+04	0.37	-546.00	0.0	1.696e+05	-1.589e+04	231.58	-8.040e+04	1.350e+04	1.374e+06
		4.049e+05	1.350e+04	-3.96e-04	0.0	60.0	1.696e+05	-1.643e+04	231.58	-8.040e+04	2.740e+04	4.049e+05
140	7	4.715e+05	7108.04	0.11	-420.00	0.0	5.215e+04	-4705.76	62.96	-1.173e+04	3330.17	4.715e+05
		1.765e+05	3330.17	-1.51e-04	0.0	60.0	5.215e+04	-5125.76	62.96	-1.173e+04	7108.04	1.765e+05
140	28	5.060e+05	8764.79	0.11	-420.00	0.0	5.629e+04	-5077.74	53.81	-1.491e+04	4449.61	5.060e+05
		1.886e+05	4449.61	-8.44e-06	0.0	60.0	5.629e+04	-5497.74	53.81	-1.491e+04	8764.79	1.886e+05
140	29	5.102e+05	6821.09	0.11	-420.00	0.0	5.604e+04	-5095.25	82.99	-1.054e+04	2600.46	5.102e+05
		1.920e+05	2600.46	-3.31e-04	0.0	60.0	5.604e+04	-5515.25	82.99	-1.054e+04	6821.09	1.920e+05
140	32	5.059e+05	8550.83	0.11	-420.00	0.0	5.630e+04	-5077.01	52.46	-1.490e+04	4644.20	5.059e+05
		1.885e+05	4644.20	6.67e-06	0.0	60.0	5.630e+04	-5497.01	52.46	-1.490e+04	8550.83	1.885e+05
140	33	5.102e+05	6819.65	0.11	-420.00	0.0	5.604e+04	-5095.24	82.99	-1.054e+04	2571.90	5.102e+05
		1.920e+05	2571.90	-3.31e-04	0.0	60.0	5.604e+04	-5515.24	82.99	-1.054e+04	6819.65	1.920e+05
140	60	5.073e+05	8093.07	0.11	-420.00	0.0	5.622e+04	-5082.91	62.46	-1.357e+04	3935.05	5.073e+05
		1.897e+05	3935.05	-1.02e-04	0.0	60.0	5.622e+04	-5502.91	62.46	-1.357e+04	8093.07	1.897e+05
140	61	5.089e+05	7360.20	0.11	-420.00	0.0	5.612e+04	-5089.62	73.50	-1.187e+04	3236.35	5.089e+05
		1.910e+05	3236.35	-2.26e-04	0.0	60.0	5.612e+04	-5509.62	73.50	-1.187e+04	7360.20	1.910e+05
140	64	5.072e+05	8011.73	0.11	-420.00	0.0	5.622e+04	-5082.64	61.95	-1.357e+04	4008.30	5.072e+05
		1.896e+05	4008.30	-9.84e-05	0.0	60.0	5.622e+04	-5502.64	61.95	-1.357e+04	8011.73	1.896e+05
140	65	5.089e+05	7359.64	0.11	-420.00	0.0	5.612e+04	-5089.62	73.50	-1.187e+04	3225.47	5.089e+05
		1.910e+05	3225.47	-2.26e-04	0.0	60.0	5.612e+04	-5509.62	73.50	-1.187e+04	7359.64	1.910e+05
140	85	5.081e+05	7685.96	0.11	-420.00	0.0	5.617e+04	-5086.13	67.73	-1.272e+04	3622.33	5.081e+05
		1.903e+05	3622.33	-1.62e-04	0.0	60.0	5.617e+04	-5506.13	67.73	-1.272e+04	7685.96	1.903e+05
140	87	9.840e+05	1.929e+04	0.26	-420.00	0.0	1.206e+05	-1.127e+04	163.41	-5.530e+04	9483.66	9.840e+05
		2.953e+05	9483.66	-2.86e-04	0.0	60.0	1.206e+05	-1.169e+04	163.41	-5.530e+04	1.929e+04	2.953e+05
140	88	4.837e+05	7300.68	0.11	-420.00	0.0	5.349e+04	-4832.55	64.55	-1.206e+04	3427.55	4.837e+05
		1.811e+05	3427.55	-1.55e-04	0.0	60.0	5.349e+04	-5252.55	64.55	-1.206e+04	7300.68	1.811e+05
140	97	9.553e+05	1.842e+04	0.25	-420.00	0.0	1.162e+05	-1.085e+04	156.30	-5.155e+04	9047.25	9.553e+05
		2.919e+05	9047.25	-2.79e-04	0.0	60.0	1.162e+05	-1.127e+04	156.30	-5.155e+04	1.842e+04	2.919e+05
140	98	5.063e+05	7658.15	0.11	-420.00	0.0	5.598e+04	-5068.01	67.50	-1.267e+04	3608.12	5.063e+05
		1.896e+05	3608.12	-1.62e-04	0.0	60.0	5.598e+04	-5488.01	67.50	-1.267e+04	7658.15	1.896e+05
140	102	5.081e+05	7685.96	0.11	-420.00	0.0	5.617e+04	-5086.13	67.73	-1.272e+04	3622.33	5.081e+05
		1.903e+05	3622.33	-1.62e-04	0.0	60.0	5.617e+04	-5506.13	67.73	-1.272e+04	7685.96	1.903e+05
141	2	1.010e+06	3.575e+04	0.39	-546.00	0.0	1.435e+05	-1.760e+04	139.21	-7.436e+04	2.740e+04	1.010e+06
		-6.222e+04	2.740e+04	-9.23e-05	0.0	60.0	1.435e+05	-1.815e+04	139.21	-7.436e+04	3.575e+04	-6.222e+04
141	7	3.665e+05	9554.33	0.11	-420.00	0.0	4.398e+04	-5457.31	40.77	-1.163e+04	7108.04	3.665e+05
		2.651e+04	7108.04	-8.33e-05	0.0	60.0	4.398e+04	-5877.31	40.77	-1.163e+04	9554.33	2.651e+04
141	8	8.877e+05	3.256e+04	0.35	-420.00	0.0	1.288e+05	-1.577e+04	125.83	-7.043e+04	2.501e+04	8.877e+05

Trave	Cmb	M3 mx/mn	M2 mx/mn	D 2 / D 3	Q 2 / Q 3	Pos.	N	V 2	V 3	T	M 2	M 3
		-7.112e+04	2.501e+04	-6.88e-05	0.0	60.0	1.288e+05	-1.619e+04	125.83	-7.043e+04	3.256e+04	-7.112e+04
141	25	3.975e+05	1.158e+04	0.12	-420.00	0.0	4.727e+04	-5912.00	52.49	-1.034e+04	6607.13	3.975e+05
		3.030e+04	6607.13	-2.48e-04	0.0	60.0	4.727e+04	-6332.00	52.49	-1.034e+04	1.158e+04	3.030e+04
141	26	3.967e+05	1.159e+04	0.12	-420.00	0.0	4.731e+04	-5905.03	52.66	-1.037e+04	6630.72	3.967e+05
		2.990e+04	6630.72	-2.48e-04	0.0	60.0	4.731e+04	-6325.03	52.66	-1.037e+04	1.159e+04	2.990e+04
141	29	3.977e+05	9258.91	0.12	-420.00	0.0	4.727e+04	-5913.33	54.11	-1.035e+04	6821.10	3.977e+05
		3.036e+04	6821.10	-2.61e-04	0.0	60.0	4.727e+04	-6333.33	54.11	-1.035e+04	9258.91	3.036e+04
141	32	3.923e+05	1.132e+04	0.12	-420.00	0.0	4.746e+04	-5879.00	32.69	-1.488e+04	8550.83	3.923e+05
		2.691e+04	8550.83	8.24e-05	0.0	60.0	4.746e+04	-6299.00	32.69	-1.488e+04	1.132e+04	2.691e+04
141	57	3.960e+05	1.078e+04	0.12	-420.00	0.0	4.733e+04	-5902.20	46.86	-1.173e+04	7278.86	3.960e+05
		2.927e+04	7278.86	-1.49e-04	0.0	60.0	4.733e+04	-6322.20	46.86	-1.173e+04	1.078e+04	2.927e+04
141	58	3.957e+05	1.078e+04	0.12	-420.00	0.0	4.734e+04	-5899.53	46.92	-1.174e+04	7287.85	3.957e+05
		2.911e+04	7287.85	-1.49e-04	0.0	60.0	4.734e+04	-6319.53	46.92	-1.174e+04	1.078e+04	2.911e+04
141	61	3.960e+05	9900.35	0.12	-420.00	0.0	4.733e+04	-5902.70	47.46	-1.173e+04	7360.20	3.960e+05
		2.929e+04	7360.20	-1.54e-04	0.0	60.0	4.733e+04	-6322.70	47.46	-1.173e+04	9900.35	2.929e+04
141	64	3.940e+05	1.068e+04	0.12	-420.00	0.0	4.740e+04	-5889.63	39.33	-1.350e+04	8011.73	3.940e+05
		2.798e+04	8011.73	-2.64e-05	0.0	60.0	4.740e+04	-6309.63	39.33	-1.350e+04	1.068e+04	2.798e+04
141	85	3.950e+05	1.029e+04	0.12	-420.00	0.0	4.737e+04	-5896.16	43.40	-1.262e+04	7685.96	3.950e+05
		2.864e+04	7685.96	-8.93e-05	0.0	60.0	4.737e+04	-6316.16	43.40	-1.262e+04	1.029e+04	2.864e+04
141	87	7.262e+05	2.520e+04	0.27	-420.00	0.0	1.020e+05	-1.252e+04	98.59	-5.125e+04	1.929e+04	7.262e+05
		-3.766e+04	1.929e+04	-7.21e-05	0.0	60.0	1.020e+05	-1.294e+04	98.59	-5.125e+04	2.520e+04	-3.766e+04
141	88	3.760e+05	9799.48	0.12	-420.00	0.0	4.511e+04	-5603.60	41.65	-1.196e+04	7300.68	3.760e+05
		2.722e+04	7300.68	-8.53e-05	0.0	60.0	4.511e+04	-6023.60	41.65	-1.196e+04	9799.48	2.722e+04
141	89	7.234e+05	2.513e+04	0.27	-420.00	0.0	1.017e+05	-1.248e+04	98.35	-5.116e+04	1.923e+04	7.234e+05
		-3.787e+04	1.923e+04	-7.16e-05	0.0	60.0	1.017e+05	-1.290e+04	98.35	-5.116e+04	2.513e+04	-3.787e+04
141	97	7.077e+05	2.409e+04	0.26	-420.00	0.0	9.829e+04	-1.208e+04	94.43	-4.789e+04	1.842e+04	7.077e+05
		-2.994e+04	1.842e+04	-7.59e-05	0.0	60.0	9.829e+04	-1.250e+04	94.43	-4.789e+04	2.409e+04	-2.994e+04
141	98	3.936e+05	1.025e+04	0.12	-420.00	0.0	4.720e+04	-5875.26	43.27	-1.257e+04	7658.15	3.936e+05
		2.853e+04	7658.15	-8.90e-05	0.0	60.0	4.720e+04	-6295.26	43.27	-1.257e+04	1.025e+04	2.853e+04
141	102	3.950e+05	1.029e+04	0.12	-420.00	0.0	4.737e+04	-5896.16	43.40	-1.262e+04	7685.96	3.950e+05
		2.864e+04	7685.96	-8.93e-05	0.0	60.0	4.737e+04	-6316.16	43.40	-1.262e+04	1.029e+04	2.864e+04
142	2	5.346e+05	3.575e+04	0.39	-546.00	0.0	1.177e+05	-1.863e+04	-206.55	-5.559e+04	3.575e+04	5.346e+05
		-5.994e+05	2.336e+04	4.33e-04	0.0	60.0	1.177e+05	-1.917e+04	-206.55	-5.559e+04	2.336e+04	-5.994e+05
142	7	2.251e+05	9554.33	0.12	-420.00	0.0	3.540e+04	-6062.52	-54.55	-8486.40	9554.33	2.251e+05
		-1.513e+05	6281.12	3.93e-05	0.0	60.0	3.540e+04	-6482.52	-54.55	-8486.40	6281.12	-1.513e+05
142	19	2.251e+05	9556.34	0.12	-420.00	0.0	3.540e+04	-6062.72	-54.63	-8494.51	9556.34	2.251e+05
		-1.513e+05	6278.55	3.94e-05	0.0	60.0	3.540e+04	-6482.72	-54.63	-8494.51	6278.55	-1.513e+05
142	21	2.454e+05	1.158e+04	0.13	-420.00	0.0	3.803e+04	-6576.61	-49.96	-6936.34	1.158e+04	2.454e+05
		-1.616e+05	7816.77	-1.09e-04	0.0	60.0	3.803e+04	-6996.61	-49.96	-6936.34	7816.77	-1.616e+05
142	23	2.404e+05	8985.87	0.13	-420.00	0.0	3.818e+04	-6527.95	-69.25	-1.152e+04	8985.87	2.404e+05
		-1.641e+05	5587.24	1.95e-04	0.0	60.0	3.818e+04	-6947.95	-69.25	-1.152e+04	5587.24	-1.641e+05
142	24	2.397e+05	8998.29	0.13	-420.00	0.0	3.820e+04	-6518.98	-69.45	-1.149e+04	8998.29	2.397e+05
		-1.642e+05	5598.29	1.95e-04	0.0	60.0	3.820e+04	-6938.98	-69.45	-1.149e+04	5598.29	-1.642e+05
142	26	2.448e+05	1.159e+04	0.13	-420.00	0.0	3.806e+04	-6567.66	-50.16	-6936.03	1.159e+04	2.448e+05
		-1.617e+05	7827.77	-1.09e-04	0.0	60.0	3.806e+04	-6987.66	-50.16	-6936.03	7827.77	-1.617e+05
142	29	2.456e+05	9258.92	0.13	-420.00	0.0	3.804e+04	-6579.11	-50.21	-6877.00	9258.92	2.456e+05
		-1.616e+05	5761.92	-1.25e-04	0.0	60.0	3.804e+04	-6999.11	-50.21	-6877.00	5761.92	-1.616e+05
142	53	2.437e+05	1.078e+04	0.13	-420.00	0.0	3.809e+04	-6558.73	-55.98	-8327.86	1.078e+04	2.437e+05
		-1.624e+05	7129.64	-1.85e-05	0.0	60.0	3.809e+04	-6978.73	-55.98	-8327.86	7129.64	-1.624e+05
142	55	2.417e+05	9796.99	0.13	-420.00	0.0	3.814e+04	-6540.30	-63.35	-1.011e+04	9796.99	2.417e+05
		-1.633e+05	6281.18	1.00e-04	0.0	60.0	3.814e+04	-6960.30	-63.35	-1.011e+04	6281.18	-1.633e+05
142	56	2.415e+05	9801.73	0.13	-420.00	0.0	3.815e+04	-6536.86	-63.43	-1.010e+04	9801.73	2.415e+05
		-1.634e+05	6285.41	1.00e-04	0.0	60.0	3.815e+04	-6956.86	-63.43	-1.010e+04	6285.41	-1.634e+05
142	58	2.434e+05	1.078e+04	0.13	-420.00	0.0	3.810e+04	-6555.29	-56.06	-8327.74	1.078e+04	2.434e+05
		-1.625e+05	7133.85	-1.84e-05	0.0	60.0	3.810e+04	-6975.29	-56.06	-8327.74	7133.85	-1.625e+05
142	61	2.437e+05	9900.35	0.13	-420.00	0.0	3.809e+04	-6559.67	-56.08	-8305.99	9900.35	2.437e+05
		-1.624e+05	6346.68	-2.21e-05	0.0	60.0	3.809e+04	-6979.67	-56.08	-8305.99	6346.68	-1.624e+05
142	85	2.426e+05	1.029e+04	0.13	-420.00	0.0	3.812e+04	-6547.79	-59.70	-9211.47	1.029e+04	2.426e+05
		-1.629e+05	6707.53	4.30e-05	0.0	60.0	3.812e+04	-6967.79	-59.70	-9211.47	6707.53	-1.629e+05
142	87	3.888e+05	2.520e+04	0.28	-420.00	0.0	8.354e+04	-1.329e+04	-145.66	-3.829e+04	2.520e+04	3.888e+05
		-4.213e+05	1.646e+04	2.94e-04	0.0	60.0	8.354e+04	-1.371e+04	-145.66	-3.829e+04	1.646e+04	-4.213e+05
142	88	2.309e+05	9799.48	0.12	-420.00	0.0	3.630e+04	-6224.28	-56.27	-8728.09	9799.48	2.309e+05
		-1.551e+05	6423.25	4.05e-05	0.0	60.0	3.630e+04	-6644.28	-56.27	-8728.09	6423.25	-1.551e+05
142	94	2.309e+05	9800.82	0.12	-420.00	0.0	3.630e+04	-6224.41	-56.32	-8733.50	9800.82	2.309e+05
		-1.552e+05	6421.54	4.06e-05	0.0	60.0	3.630e+04	-6644.41	-56.32	-8733.50	6421.54	-1.552e+05
142	97	3.831e+05	2.409e+04	0.27	-420.00	0.0	8.040e+04	-1.287e+04	-139.70	-3.575e+04	2.409e+04	3.831e+05
		-4.014e+05	1.571e+04	2.71e-04	0.0	60.0	8.040e+04	-1.329e+04	-139.70	-3.575e+04	1.571e+04	-4.014e+05
142	98	2.417e+05	1.025e+04	0.13	-420.00	0.0	3.799e+04	-6524.67	-59.45	-9176.37	1.025e+04	2.417e+05
		-1.623e+05	6687.40	4.28e-05	0.0	60.0	3.799e+04	-6944.67	-59.45	-9176.37	6687.40	-1.623e+05
142	101	2.417e+05	1.026e+04	0.13	-420.00	0.0	3.799e+04	-6524.74	-59.48	-9179.07	1.026e+04	2.417e+05
		-1.623e+05	6686.55	4.28e-05	0.0	60.0	3.799e+04	-6944.74	-59.48	-9179.07	6686.55	-1.623e+05
142	102	2.426e+05	1.029e+04	0.13	-420.00	0.0	3.812e+04	-6547.79	-59.70	-9211.47	1.029e+04	2.426e+05
		-1.629e+05	6707.53	4.30e-05	0.0	60.0	3.812e+04	-6967.79	-59.70	-9211.47	6707.53	-1.629e+05
143	2	-2.862e+05	2.336e+04	0.38	-546.00	0.0	1.045e+05	-2.287e+04	-389.26	-2.670e+04	2.336e+04	-2.862e+05
		-1.675e+06	-0.02	9.13e-04	0.0	60.0	1.045e+05	-2.342e+04	-389.26	-2.670e+04	-0.02	-1.675e+06

Trave	Cmb	M3 mx/mn	M2 mx/mn	D 2 / D 3	Q 2 / Q 3	Pos.	N	V 2	V 3	T	M 2	M 3
143	19	-1.928e+04	6278.56	0.11	-420.00	0.0	2.981e+04	-7567.19	-104.64	-3684.00	6278.56	-1.928e+04
		-4.859e+05	-2.29e-03	1.43e-04	0.0	60.0	2.981e+04	-7987.19	-104.64	-3684.00	-2.29e-03	-4.859e+05
143	21	-1.870e+04	7816.77	0.12	-420.00	0.0	3.200e+04	-8181.16	-130.28	-2413.07	7816.77	-1.870e+04
		-5.223e+05	-1.39e-03	1.83e-05	0.0	60.0	3.200e+04	-8601.16	-130.28	-2413.07	-1.39e-03	-5.223e+05
143	22	-1.911e+04	7827.81	0.12	-420.00	0.0	3.201e+04	-8190.06	-130.46	-2384.48	7827.81	-1.911e+04
		-5.224e+05	-1.40e-03	1.89e-05	0.0	60.0	3.201e+04	-8610.06	-130.46	-2384.48	-1.40e-03	-5.224e+05
143	24	-2.272e+04	5598.29	0.12	-420.00	0.0	3.219e+04	-8150.18	-93.30	-5639.10	5598.29	-2.272e+04
		-5.242e+05	-3.56e-03	2.89e-04	0.0	60.0	3.219e+04	-8570.18	-93.30	-5639.10	-3.56e-03	-5.242e+05
143	29	-1.862e+04	5761.92	0.12	-420.00	0.0	3.201e+04	-8183.70	-96.03	-2405.69	5761.92	-1.862e+04
		-5.224e+05	-1.27e-03	-2.94e-06	0.0	60.0	3.201e+04	-8603.70	-96.03	-2405.69	-1.27e-03	-5.224e+05
143	36	-2.281e+04	7653.09	0.12	-420.00	0.0	3.219e+04	-8147.62	-127.55	-5674.78	7653.09	-2.281e+04
		-5.241e+05	-3.68e-03	3.06e-04	0.0	60.0	3.219e+04	-8567.62	-127.55	-5674.78	-3.68e-03	-5.241e+05
143	53	-1.995e+04	7129.64	0.12	-420.00	0.0	3.206e+04	-8171.49	-118.83	-3398.37	7129.64	-1.995e+04
		-5.229e+05	-2.07e-03	1.02e-04	0.0	60.0	3.206e+04	-8591.49	-118.83	-3398.37	-2.07e-03	-5.229e+05
143	54	-2.011e+04	7133.87	0.12	-420.00	0.0	3.206e+04	-8174.90	-118.90	-3387.51	7133.87	-2.011e+04
		-5.229e+05	-2.07e-03	1.03e-04	0.0	60.0	3.206e+04	-8594.90	-118.90	-3387.51	-2.07e-03	-5.229e+05
143	56	-2.147e+04	6285.42	0.12	-420.00	0.0	3.213e+04	-8159.85	-104.76	-4653.79	6285.42	-2.147e+04
		-5.236e+05	-2.88e-03	2.05e-04	0.0	60.0	3.213e+04	-8579.85	-104.76	-4653.79	-2.88e-03	-5.236e+05
143	61	-1.992e+04	6346.69	0.12	-420.00	0.0	3.206e+04	-8172.45	-105.78	-3395.61	6346.69	-1.992e+04
		-5.229e+05	-2.02e-03	9.60e-05	0.0	60.0	3.206e+04	-8592.45	-105.78	-3395.61	-2.02e-03	-5.229e+05
143	68	-2.151e+04	7068.36	0.12	-420.00	0.0	3.213e+04	-8158.88	-117.81	-4667.31	7068.36	-2.151e+04
		-5.236e+05	-2.93e-03	2.11e-04	0.0	60.0	3.213e+04	-8578.88	-117.81	-4667.31	-2.93e-03	-5.236e+05
143	85	-2.071e+04	6707.53	0.12	-420.00	0.0	3.210e+04	-8165.67	-111.79	-4026.08	6707.53	-2.071e+04
		-5.233e+05	-2.47e-03	1.54e-04	0.0	60.0	3.210e+04	-8585.67	-111.79	-4026.08	-2.47e-03	-5.233e+05
143	87	-1.936e+05	1.646e+04	0.27	-420.00	0.0	7.393e+04	-1.634e+04	-274.41	-1.834e+04	1.646e+04	-1.936e+05
		-1.186e+06	-0.01	6.29e-04	0.0	60.0	7.393e+04	-1.676e+04	-274.41	-1.834e+04	-0.01	-1.186e+06
143	94	-1.976e+04	6421.55	0.12	-420.00	0.0	3.057e+04	-7766.68	-107.03	-3798.03	6421.55	-1.976e+04
		-4.984e+05	-2.35e-03	1.46e-04	0.0	60.0	3.057e+04	-8186.68	-107.03	-3798.03	-2.35e-03	-4.984e+05
143	97	-1.770e+05	1.571e+04	0.26	-420.00	0.0	7.092e+04	-1.583e+04	-261.81	-1.709e+04	1.571e+04	-1.770e+05
		-1.139e+06	-9.86e-03	5.87e-04	0.0	60.0	7.092e+04	-1.625e+04	-261.81	-1.709e+04	-9.86e-03	-1.139e+06
143	101	-2.064e+04	6686.55	0.12	-420.00	0.0	3.199e+04	-8137.17	-111.44	-4011.18	6686.55	-2.064e+04
		-5.215e+05	-2.47e-03	1.53e-04	0.0	60.0	3.199e+04	-8557.17	-111.44	-4011.18	-2.47e-03	-5.215e+05
143	102	-2.071e+04	6707.53	0.12	-420.00	0.0	3.210e+04	-8165.67	-111.79	-4026.08	6707.53	-2.071e+04
		-5.233e+05	-2.47e-03	1.54e-04	0.0	60.0	3.210e+04	-8585.67	-111.79	-4026.08	-2.47e-03	-5.233e+05
165	2	-2.206e+04	1.214e+05	-0.43	-546.00	0.0	1.036e+05	2.848e+04	2022.69	2.279e+04	-0.06	-1.714e+06
		-1.714e+06	-0.06	-2.37e-03	0.0	60.0	1.036e+05	2.793e+04	2022.69	2.279e+04	1.214e+05	-2.206e+04
165	7	-1.822e+04	3.457e+04	-0.12	-420.00	0.0	3.013e+04	8206.17	576.15	210.93	-0.01	-4.980e+05
		-4.980e+05	-0.01	-5.73e-04	0.0	60.0	3.013e+04	7786.17	576.15	210.93	3.457e+04	-1.822e+04
165	20	-1.606e+04	1.098e+05	-0.39	-420.00	0.0	9.354e+04	2.574e+04	1829.54	2.271e+04	-0.05	-1.548e+06
		-1.548e+06	-0.05	-2.17e-03	0.0	60.0	9.354e+04	2.532e+04	1829.54	2.271e+04	1.098e+05	-1.606e+04
165	22	-1.203e+04	3.699e+04	-0.12	-420.00	0.0	3.204e+04	8767.07	616.45	-877.34	-0.01	-5.313e+05
		-5.313e+05	-0.01	-4.51e-04	0.0	60.0	3.204e+04	8347.07	616.45	-877.34	3.699e+04	-1.203e+04
165	23	-2.680e+04	3.765e+04	-0.12	-420.00	0.0	3.287e+04	8884.21	627.51	1402.60	-0.02	-5.414e+05
		-5.414e+05	-0.02	-7.89e-04	0.0	60.0	3.287e+04	8464.21	627.51	1402.60	3.765e+04	-2.680e+04
165	27	-2.680e+04	3.765e+04	-0.12	-420.00	0.0	3.287e+04	8884.15	627.51	1403.88	-0.02	-5.414e+05
		-5.414e+05	-0.02	-7.89e-04	0.0	60.0	3.287e+04	8464.15	627.51	1403.88	3.765e+04	-2.680e+04
165	31	-2.625e+04	3.757e+04	-0.12	-420.00	0.0	3.286e+04	8878.25	626.17	1378.00	-0.02	-5.414e+05
		-5.414e+05	-0.02	-7.71e-04	0.0	60.0	3.286e+04	8458.25	626.17	1378.00	3.757e+04	-2.625e+04
165	54	-1.662e+04	3.719e+04	-0.12	-420.00	0.0	3.230e+04	8803.37	619.88	-180.19	-0.01	-5.344e+05
		-5.344e+05	-0.01	-5.56e-04	0.0	60.0	3.230e+04	8383.37	619.88	-180.19	3.719e+04	-1.662e+04
165	55	-2.221e+04	3.744e+04	-0.12	-420.00	0.0	3.261e+04	8847.90	624.07	705.45	-0.01	-5.383e+05
		-5.383e+05	-0.01	-6.84e-04	0.0	60.0	3.261e+04	8427.90	624.07	705.45	3.744e+04	-2.221e+04
165	59	-2.221e+04	3.744e+04	-0.12	-420.00	0.0	3.261e+04	8847.88	624.07	705.94	-0.01	-5.383e+05
		-5.383e+05	-0.01	-6.84e-04	0.0	60.0	3.261e+04	8427.88	624.07	705.94	3.744e+04	-2.221e+04
165	63	-2.200e+04	3.741e+04	-0.12	-420.00	0.0	3.261e+04	8845.66	623.57	696.39	-0.01	-5.383e+05
		-5.383e+05	-0.01	-6.77e-04	0.0	60.0	3.261e+04	8425.66	623.57	696.39	3.741e+04	-2.200e+04
165	85	-1.942e+04	3.732e+04	-0.12	-420.00	0.0	3.246e+04	8825.64	621.98	262.63	-0.01	-5.364e+05
		-5.364e+05	-0.01	-6.20e-04	0.0	60.0	3.246e+04	8405.64	621.98	262.63	3.732e+04	-1.942e+04
165	87	-1.730e+04	8.588e+04	-0.30	-420.00	0.0	7.340e+04	2.016e+04	1431.39	1.523e+04	-0.04	-1.214e+06
		-1.214e+06	-0.04	-1.66e-03	0.0	60.0	7.340e+04	1.974e+04	1431.39	1.523e+04	8.588e+04	-1.730e+04
165	88	-1.862e+04	3.549e+04	-0.12	-420.00	0.0	3.091e+04	8412.66	591.43	228.16	-0.01	-5.108e+05
		-5.108e+05	-0.01	-5.88e-04	0.0	60.0	3.091e+04	7992.66	591.43	228.16	3.549e+04	-1.862e+04
165	95	-1.718e+04	8.562e+04	-0.30	-420.00	0.0	7.318e+04	2.010e+04	1427.02	1.523e+04	-0.04	-1.211e+06
		-1.211e+06	-0.04	-1.66e-03	0.0	60.0	7.318e+04	1.968e+04	1427.02	1.523e+04	8.562e+04	-1.718e+04
165	97	-1.813e+04	8.244e+04	-0.29	-420.00	0.0	7.050e+04	1.935e+04	1374.01	1.376e+04	-0.04	-1.166e+06
		-1.166e+06	-0.04	-1.58e-03	0.0	60.0	7.050e+04	1.893e+04	1374.01	1.376e+04	8.244e+04	-1.813e+04
165	98	-1.936e+04	3.719e+04	-0.12	-420.00	0.0	3.234e+04	8796.13	619.79	260.05	-0.01	-5.345e+05
		-5.345e+05	-0.01	-6.18e-04	0.0	60.0	3.234e+04	8376.13	619.79	260.05	3.719e+04	-1.936e+04
165	102	-1.942e+04	3.732e+04	-0.12	-420.00	0.0	3.246e+04	8825.64	621.98	262.63	-0.01	-5.364e+05
		-5.364e+05	-0.01	-6.20e-04	0.0	60.0	3.246e+04	8405.64	621.98	262.63	3.732e+04	-1.942e+04
166	2	8.642e+05	1.214e+05	-0.44	-546.00	0.0	1.244e+05	2.341e+04	-609.96	1.311e+05	1.214e+05	-5.240e+05
		-5.240e+05	8.476e+04	-1.66e-04	0.0	60.0	1.244e+05	2.286e+04	-609.96	1.311e+05	8.476e+04	8.642e+05
166	7	2.323e+05	3.457e+04	-0.12	-420.00	0.0	3.560e+04	6578.82	-191.74	2.486e+04	3.457e+04	-1.499e+05
		-1.499e+05	2.306e+04	2.32e-05	0.0	60.0	3.560e+04	6158.82	-191.74	2.486e+04	2.306e+04	2.323e+05
166	19	2.323e+05	3.457e+04	-0.12	-420.00	0.0	3.560e+04	6578.86	-191.75	2.487e+04	3.457e+04	-1.499e+05

Trave	Cmb	M3 mx/mn	M2 mx/mn	D 2 / D 3	Q 2 / Q 3	Pos.	N	V 2	V 3	T	M 2	M 3
		-1.499e+05	2.306e+04	2.32e-05	0.0	60.0	3.560e+04	6158.86	-191.75	2.487e+04	2.306e+04	2.323e+05
166	22	2.561e+05	3.699e+04	-0.13	-420.00	0.0	3.813e+04	7126.10	-195.95	2.518e+04	3.699e+04	-1.588e+05
		-1.588e+05	2.428e+04	1.89e-04	0.0	60.0	3.813e+04	6706.10	-195.95	2.518e+04	2.428e+04	2.561e+05
166	27	2.447e+05	3.765e+04	-0.13	-420.00	0.0	3.857e+04	7015.43	-217.84	2.862e+04	3.765e+04	-1.637e+05
		-1.637e+05	2.553e+04	-1.41e-04	0.0	60.0	3.857e+04	6595.43	-217.84	2.862e+04	2.553e+04	2.447e+05
166	30	2.557e+05	3.707e+04	-0.13	-420.00	0.0	3.811e+04	7118.83	-194.05	2.519e+04	3.707e+04	-1.588e+05
		-1.588e+05	2.405e+04	1.73e-04	0.0	60.0	3.811e+04	6698.83	-194.05	2.519e+04	2.405e+04	2.557e+05
166	31	2.451e+05	3.757e+04	-0.13	-420.00	0.0	3.859e+04	7022.67	-219.72	2.861e+04	3.757e+04	-1.637e+05
		-1.637e+05	2.576e+04	-1.25e-04	0.0	60.0	3.859e+04	6602.67	-219.72	2.861e+04	2.576e+04	2.451e+05
166	34	2.557e+05	3.707e+04	-0.13	-420.00	0.0	3.811e+04	7118.81	-194.04	2.519e+04	3.707e+04	-1.588e+05
		-1.588e+05	2.405e+04	1.73e-04	0.0	60.0	3.811e+04	6698.81	-194.04	2.519e+04	2.405e+04	2.557e+05
166	54	2.525e+05	3.719e+04	-0.13	-420.00	0.0	3.826e+04	7091.70	-202.75	2.623e+04	3.719e+04	-1.603e+05
		-1.603e+05	2.467e+04	8.62e-05	0.0	60.0	3.826e+04	6671.70	-202.75	2.623e+04	2.467e+04	2.525e+05
166	59	2.482e+05	3.744e+04	-0.13	-420.00	0.0	3.843e+04	7049.82	-211.03	2.757e+04	3.744e+04	-1.622e+05
		-1.622e+05	2.514e+04	-5.68e-05	0.0	60.0	3.843e+04	6629.82	-211.03	2.757e+04	2.514e+04	2.482e+05
166	62	2.524e+05	3.722e+04	-0.13	-420.00	0.0	3.826e+04	7088.95	-202.04	2.623e+04	3.722e+04	-1.603e+05
		-1.603e+05	2.458e+04	8.01e-05	0.0	60.0	3.826e+04	6668.95	-202.04	2.623e+04	2.458e+04	2.524e+05
166	63	2.484e+05	3.741e+04	-0.13	-420.00	0.0	3.844e+04	7052.56	-211.74	2.757e+04	3.741e+04	-1.622e+05
		-1.622e+05	2.523e+04	-5.31e-05	0.0	60.0	3.844e+04	6632.56	-211.74	2.757e+04	2.523e+04	2.484e+05
166	66	2.524e+05	3.722e+04	-0.13	-420.00	0.0	3.826e+04	7088.94	-202.03	2.624e+04	3.722e+04	-1.603e+05
		-1.603e+05	2.458e+04	8.01e-05	0.0	60.0	3.826e+04	6668.94	-202.03	2.624e+04	2.458e+04	2.524e+05
166	85	2.504e+05	3.732e+04	-0.13	-420.00	0.0	3.835e+04	7070.75	-206.89	2.690e+04	3.732e+04	-1.613e+05
		-1.613e+05	2.491e+04	-2.48e-05	0.0	60.0	3.835e+04	6650.75	-206.89	2.690e+04	2.491e+04	2.504e+05
166	87	6.095e+05	8.588e+04	-0.31	-420.00	0.0	8.802e+04	1.655e+04	-434.22	9.096e+04	8.588e+04	-3.709e+05
		-3.709e+05	5.983e+04	-1.13e-04	0.0	60.0	8.802e+04	1.613e+04	-434.22	9.096e+04	5.983e+04	6.095e+05
166	88	2.383e+05	3.549e+04	-0.12	-420.00	0.0	3.651e+04	6742.80	-196.79	2.554e+04	3.549e+04	-1.537e+05
		-1.537e+05	2.368e+04	2.34e-05	0.0	60.0	3.651e+04	6322.80	-196.79	2.554e+04	2.368e+04	2.383e+05
166	94	2.383e+05	3.549e+04	-0.12	-420.00	0.0	3.651e+04	6742.82	-196.79	2.554e+04	3.549e+04	-1.537e+05
		-1.537e+05	2.368e+04	2.34e-05	0.0	60.0	3.651e+04	6322.82	-196.79	2.554e+04	2.368e+04	2.383e+05
166	97	5.829e+05	8.244e+04	-0.30	-420.00	0.0	8.447e+04	1.585e+04	-419.28	8.560e+04	8.244e+04	-3.558e+05
		-3.558e+05	5.728e+04	-1.05e-04	0.0	60.0	8.447e+04	1.543e+04	-419.28	8.560e+04	5.728e+04	5.829e+05
166	98	2.495e+05	3.719e+04	-0.13	-420.00	0.0	3.822e+04	7047.33	-206.17	2.680e+04	3.719e+04	-1.607e+05
		-1.607e+05	2.482e+04	-2.47e-05	0.0	60.0	3.822e+04	6627.33	-206.17	2.680e+04	2.482e+04	2.495e+05
166	101	2.495e+05	3.719e+04	-0.13	-420.00	0.0	3.822e+04	7047.34	-206.17	2.680e+04	3.719e+04	-1.607e+05
		-1.607e+05	2.482e+04	-2.47e-05	0.0	60.0	3.822e+04	6627.34	-206.17	2.680e+04	2.482e+04	2.495e+05
166	102	2.504e+05	3.732e+04	-0.13	-420.00	0.0	3.835e+04	7070.75	-206.89	2.690e+04	3.732e+04	-1.613e+05
		-1.613e+05	2.491e+04	-2.48e-05	0.0	60.0	3.835e+04	6650.75	-206.89	2.690e+04	2.491e+04	2.504e+05
167	2	1.414e+06	8.476e+04	-0.43	-546.00	0.0	1.569e+05	2.214e+04	-641.17	1.504e+05	8.476e+04	1.021e+05
		1.021e+05	4.629e+04	8.51e-04	0.0	60.0	1.569e+05	2.160e+04	-641.17	1.504e+05	4.629e+04	1.414e+06
167	7	3.753e+05	2.306e+04	-0.11	-420.00	0.0	4.418e+04	5930.78	-198.32	2.702e+04	2.306e+04	3.204e+04
		3.204e+04	1.117e+04	2.52e-04	0.0	60.0	4.418e+04	5510.78	-198.32	2.702e+04	1.117e+04	3.753e+05
167	19	3.753e+05	2.306e+04	-0.11	-420.00	0.0	4.418e+04	5930.81	-198.32	2.703e+04	2.306e+04	3.204e+04
		3.204e+04	1.116e+04	2.52e-04	0.0	60.0	4.418e+04	5510.81	-198.32	2.703e+04	1.116e+04	3.753e+05
167	22	4.092e+05	2.428e+04	-0.12	-420.00	0.0	4.742e+04	6416.33	-220.82	2.747e+04	2.428e+04	3.688e+04
		3.688e+04	1.144e+04	4.39e-04	0.0	60.0	4.742e+04	5996.33	-220.82	2.747e+04	1.144e+04	4.092e+05
167	30	4.088e+05	2.405e+04	-0.12	-420.00	0.0	4.742e+04	6410.19	-218.95	2.747e+04	2.405e+04	3.688e+04
		3.688e+04	1.130e+04	4.26e-04	0.0	60.0	4.742e+04	5990.19	-218.95	2.747e+04	1.130e+04	4.088e+05
167	31	4.000e+05	2.576e+04	-0.12	-420.00	0.0	4.776e+04	6334.17	-209.09	3.101e+04	2.576e+04	3.251e+04
		3.251e+04	1.282e+04	1.16e-04	0.0	60.0	4.776e+04	5914.17	-209.09	3.101e+04	1.282e+04	4.000e+05
167	34	4.088e+05	2.405e+04	-0.12	-420.00	0.0	4.742e+04	6410.18	-218.94	2.747e+04	2.405e+04	3.688e+04
		3.688e+04	1.130e+04	4.26e-04	0.0	60.0	4.742e+04	5990.18	-218.94	2.747e+04	1.130e+04	4.088e+05
167	35	4.000e+05	2.576e+04	-0.12	-420.00	0.0	4.776e+04	6334.18	-209.10	3.101e+04	2.576e+04	3.251e+04
		3.251e+04	1.283e+04	1.16e-04	0.0	60.0	4.776e+04	5914.18	-209.10	3.101e+04	1.283e+04	4.000e+05
167	54	4.062e+05	2.467e+04	-0.12	-420.00	0.0	4.753e+04	6388.89	-216.60	2.855e+04	2.467e+04	3.552e+04
		3.552e+04	1.183e+04	3.35e-04	0.0	60.0	4.753e+04	5968.89	-216.60	2.855e+04	1.183e+04	4.062e+05
167	62	4.061e+05	2.458e+04	-0.12	-420.00	0.0	4.752e+04	6386.57	-215.89	2.855e+04	2.458e+04	3.552e+04
		3.552e+04	1.178e+04	3.30e-04	0.0	60.0	4.752e+04	5966.57	-215.89	2.855e+04	1.178e+04	4.061e+05
167	63	4.028e+05	2.523e+04	-0.12	-420.00	0.0	4.766e+04	6357.79	-212.15	2.993e+04	2.523e+04	3.387e+04
		3.387e+04	1.235e+04	2.13e-04	0.0	60.0	4.766e+04	5937.79	-212.15	2.993e+04	1.235e+04	4.028e+05
167	66	4.061e+05	2.458e+04	-0.12	-420.00	0.0	4.752e+04	6386.57	-215.89	2.855e+04	2.458e+04	3.552e+04
		3.552e+04	1.178e+04	3.30e-04	0.0	60.0	4.752e+04	5966.57	-215.89	2.855e+04	1.178e+04	4.061e+05
167	67	4.028e+05	2.523e+04	-0.12	-420.00	0.0	4.766e+04	6357.79	-212.15	2.993e+04	2.523e+04	3.387e+04
		3.387e+04	1.235e+04	2.13e-04	0.0	60.0	4.766e+04	5937.79	-212.15	2.993e+04	1.235e+04	4.028e+05
167	85	4.044e+05	2.491e+04	-0.12	-420.00	0.0	4.759e+04	6372.18	-214.02	2.924e+04	2.491e+04	3.469e+04
		3.469e+04	1.206e+04	2.71e-04	0.0	60.0	4.759e+04	5952.18	-214.02	2.924e+04	1.206e+04	4.044e+05
167	87	9.969e+05	5.983e+04	-0.30	-420.00	0.0	1.110e+05	1.561e+04	-455.98	1.041e+05	5.983e+04	7.271e+04
		7.271e+04	3.247e+04	6.03e-04	0.0	60.0	1.110e+05	1.519e+04	-455.98	1.041e+05	3.247e+04	9.969e+05
167	88	3.850e+05	2.368e+04	-0.12	-420.00	0.0	4.532e+04	6077.91	-203.55	2.776e+04	2.368e+04	3.292e+04
		3.292e+04	1.146e+04	2.59e-04	0.0	60.0	4.532e+04	5657.91	-203.55	2.776e+04	1.146e+04	3.850e+05
167	94	3.850e+05	2.368e+04	-0.12	-420.00	0.0	4.532e+04	6077.93	-203.55	2.777e+04	2.368e+04	3.292e+04
		3.292e+04	1.146e+04	2.59e-04	0.0	60.0	4.532e+04	5657.93	-203.55	2.777e+04	1.146e+04	3.850e+05
167	97	9.526e+05	5.728e+04	-0.29	-420.00	0.0	1.064e+05	1.492e+04	-439.86	9.779e+04	5.728e+04	7.027e+04
		7.027e+04	3.089e+04	5.80e-04	0.0	60.0	1.064e+05	1.450e+04	-439.86	9.779e+04	3.089e+04	9.526e+05
167	98	4.030e+05	2.482e+04	-0.12	-420.00	0.0	4.743e+04	6351.16	-213.27	2.913e+04	2.482e+04	3.457e+04
		3.457e+04	1.202e+04	2.70e-04	0.0	60.0	4.743e+04	5931.16	-213.27	2.913e+04	1.202e+04	4.030e+05

Trave	Cmb	M3 mx/mn	M2 mx/mn	D 2 / D 3	Q 2 / Q 3	Pos.	N	V 2	V 3	T	M 2	M 3
167	101	4.030e+05	2.482e+04	-0.12	-420.00	0.0	4.743e+04	6351.17	-213.27	2.914e+04	2.482e+04	3.457e+04
		3.457e+04	1.202e+04	2.70e-04	0.0	60.0	4.743e+04	5931.17	-213.27	2.914e+04	1.202e+04	4.030e+05
167	102	4.044e+05	2.491e+04	-0.12	-420.00	0.0	4.759e+04	6372.18	-214.02	2.924e+04	2.491e+04	3.469e+04
		3.469e+04	1.206e+04	2.71e-04	0.0	60.0	4.759e+04	5952.18	-214.02	2.924e+04	1.206e+04	4.044e+05
168	2	1.864e+06	4.629e+04	-0.40	-546.00	0.0	1.901e+05	2.074e+04	-413.03	1.465e+05	4.629e+04	6.363e+05
		6.363e+05	2.151e+04	1.22e-03	0.0	60.0	1.901e+05	2.019e+04	-413.03	1.465e+05	2.151e+04	1.864e+06
168	7	4.799e+05	1.117e+04	-0.11	-420.00	0.0	5.246e+04	5185.52	-129.47	2.529e+04	1.117e+04	1.813e+05
		1.813e+05	3396.86	3.33e-04	0.0	60.0	5.246e+04	4765.52	-129.47	2.529e+04	3396.86	4.799e+05
168	19	4.799e+05	1.116e+04	-0.11	-420.00	0.0	5.246e+04	5185.54	-129.47	2.529e+04	1.116e+04	1.813e+05
		1.813e+05	3396.27	3.33e-04	0.0	60.0	5.246e+04	4765.54	-129.47	2.529e+04	3396.27	4.799e+05
168	21	5.200e+05	1.146e+04	-0.11	-420.00	0.0	5.633e+04	5598.68	-154.20	2.566e+04	1.146e+04	1.932e+05
		1.932e+05	2636.64	5.24e-04	0.0	60.0	5.633e+04	5178.68	-154.20	2.566e+04	2636.64	5.200e+05
168	22	5.209e+05	1.144e+04	-0.11	-420.00	0.0	5.628e+04	5603.38	-154.12	2.564e+04	1.144e+04	1.939e+05
		1.939e+05	2660.10	5.24e-04	0.0	60.0	5.628e+04	5183.38	-154.12	2.564e+04	2660.10	5.209e+05
168	23	5.132e+05	1.268e+04	-0.11	-420.00	0.0	5.674e+04	5535.18	-125.28	2.908e+04	1.268e+04	1.972e+05
		1.972e+05	4703.86	1.93e-04	0.0	60.0	5.674e+04	5115.18	-125.28	2.908e+04	4703.86	5.132e+05
168	26	5.209e+05	1.144e+04	-0.11	-420.00	0.0	5.628e+04	5603.37	-154.12	2.564e+04	1.144e+04	1.939e+05
		1.939e+05	2634.97	5.24e-04	0.0	60.0	5.628e+04	5183.37	-154.12	2.564e+04	2634.97	5.209e+05
168	35	5.135e+05	1.283e+04	-0.11	-420.00	0.0	5.671e+04	5539.30	-126.77	2.909e+04	1.283e+04	1.971e+05
		1.971e+05	4346.09	2.01e-04	0.0	60.0	5.671e+04	5119.30	-126.77	2.909e+04	4346.09	5.135e+05
168	53	5.182e+05	1.184e+04	-0.11	-420.00	0.0	5.644e+04	5580.38	-145.18	2.670e+04	1.184e+04	1.947e+05
		1.947e+05	3287.10	4.21e-04	0.0	60.0	5.644e+04	5160.38	-145.18	2.670e+04	3287.10	5.182e+05
168	54	5.185e+05	1.183e+04	-0.11	-420.00	0.0	5.642e+04	5582.19	-145.15	2.669e+04	1.183e+04	1.949e+05
		1.949e+05	3296.05	4.21e-04	0.0	60.0	5.642e+04	5162.19	-145.15	2.669e+04	3296.05	5.185e+05
168	55	5.156e+05	1.230e+04	-0.11	-420.00	0.0	5.660e+04	5556.38	-134.24	2.803e+04	1.230e+04	1.961e+05
		1.961e+05	4067.92	2.96e-04	0.0	60.0	5.660e+04	5136.38	-134.24	2.803e+04	4067.92	5.156e+05
168	58	5.185e+05	1.183e+04	-0.11	-420.00	0.0	5.642e+04	5582.18	-145.15	2.669e+04	1.183e+04	1.949e+05
		1.949e+05	3286.46	4.21e-04	0.0	60.0	5.642e+04	5162.18	-145.15	2.669e+04	3286.46	5.185e+05
168	67	5.157e+05	1.235e+04	-0.11	-420.00	0.0	5.659e+04	5557.93	-134.81	2.804e+04	1.235e+04	1.961e+05
		1.961e+05	3932.88	2.99e-04	0.0	60.0	5.659e+04	5137.93	-134.81	2.804e+04	3932.88	5.157e+05
168	85	5.171e+05	1.206e+04	-0.11	-420.00	0.0	5.651e+04	5569.28	-139.70	2.736e+04	1.206e+04	1.955e+05
		1.955e+05	3681.98	3.58e-04	0.0	60.0	5.651e+04	5149.28	-139.70	2.736e+04	3681.98	5.171e+05
168	87	1.312e+06	3.247e+04	-0.28	-420.00	0.0	1.343e+05	1.457e+04	-293.98	1.013e+05	3.247e+04	4.502e+05
		4.502e+05	1.483e+04	8.60e-04	0.0	60.0	1.343e+05	1.415e+04	-293.98	1.013e+05	1.483e+04	1.312e+06
168	88	4.923e+05	1.146e+04	-0.11	-420.00	0.0	5.381e+04	5313.44	-132.88	2.598e+04	1.146e+04	1.861e+05
		1.861e+05	3491.90	3.41e-04	0.0	60.0	5.381e+04	4893.44	-132.88	2.598e+04	3491.90	4.923e+05
168	94	4.923e+05	1.146e+04	-0.11	-420.00	0.0	5.381e+04	5313.46	-132.88	2.598e+04	1.146e+04	1.861e+05
		1.861e+05	3491.51	3.41e-04	0.0	60.0	5.381e+04	4893.46	-132.88	2.598e+04	3491.51	4.923e+05
168	97	1.251e+06	3.089e+04	-0.27	-420.00	0.0	1.286e+05	1.387e+04	-283.81	9.499e+04	3.089e+04	4.321e+05
		4.321e+05	1.386e+04	8.23e-04	0.0	60.0	1.286e+05	1.345e+04	-283.81	9.499e+04	1.386e+04	1.251e+06
168	98	5.153e+05	1.202e+04	-0.11	-420.00	0.0	5.632e+04	5551.01	-139.21	2.726e+04	1.202e+04	1.948e+05
		1.948e+05	3668.45	3.57e-04	0.0	60.0	5.632e+04	5131.01	-139.21	2.726e+04	3668.45	5.153e+05
168	101	5.153e+05	1.202e+04	-0.11	-420.00	0.0	5.632e+04	5551.01	-139.21	2.726e+04	1.202e+04	1.948e+05
		1.948e+05	3668.25	3.57e-04	0.0	60.0	5.632e+04	5131.01	-139.21	2.726e+04	3668.25	5.153e+05
168	102	5.171e+05	1.206e+04	-0.11	-420.00	0.0	5.651e+04	5569.28	-139.70	2.736e+04	1.206e+04	1.955e+05
		1.955e+05	3681.98	3.58e-04	0.0	60.0	5.651e+04	5149.28	-139.70	2.736e+04	3681.98	5.171e+05
169	1	7.509e+05	4542.07	-0.13	-546.00	0.0	7.969e+04	5903.49	-92.54	2.967e+04	4542.07	4.131e+05
		4.131e+05	-1010.63	4.42e-04	0.0	60.0	7.969e+04	5357.49	-92.54	2.967e+04	-1010.63	7.509e+05
169	2	2.275e+06	2.151e+04	-0.36	-546.00	0.0	2.216e+05	1.943e+04	-232.38	1.305e+05	2.151e+04	1.125e+06
		1.125e+06	7569.21	1.26e-03	0.0	60.0	2.216e+05	1.889e+04	-232.38	1.305e+05	7569.21	2.275e+06
169	7	5.628e+05	3396.86	-0.10	-420.00	0.0	5.973e+04	4430.26	-69.33	2.220e+04	3396.86	3.095e+05
		3.095e+05	-762.66	3.32e-04	0.0	60.0	5.973e+04	4010.26	-69.33	2.220e+04	-762.66	5.628e+05
169	21	6.082e+05	2636.65	-0.10	-420.00	0.0	6.466e+04	4781.05	-91.07	2.229e+04	2636.65	3.313e+05
		3.313e+05	-2674.22	5.12e-04	0.0	60.0	6.466e+04	4361.05	-91.07	2.229e+04	-2674.22	6.082e+05
169	22	6.091e+05	2660.11	-0.10	-420.00	0.0	6.460e+04	4782.66	-91.04	2.229e+04	2660.11	3.321e+05
		3.321e+05	-2648.95	5.12e-04	0.0	60.0	6.460e+04	4362.66	-91.04	2.229e+04	-2648.95	6.091e+05
169	24	6.045e+05	4727.33	-0.10	-420.00	0.0	6.402e+04	4730.48	-58.52	2.576e+04	4727.33	3.359e+05
		3.359e+05	1062.87	2.02e-04	0.0	60.0	6.402e+04	4310.48	-58.52	2.576e+04	1062.87	6.045e+05
169	26	6.091e+05	2634.98	-0.10	-420.00	0.0	6.460e+04	4782.66	-91.04	2.229e+04	2634.98	3.321e+05
		3.321e+05	-2675.95	5.12e-04	0.0	60.0	6.460e+04	4362.66	-91.04	2.229e+04	-2675.95	6.091e+05
169	27	6.036e+05	4729.00	-0.10	-420.00	0.0	6.408e+04	4728.86	-58.55	2.576e+04	4729.00	3.351e+05
		3.351e+05	1064.60	2.02e-04	0.0	60.0	6.408e+04	4308.86	-58.55	2.576e+04	1064.60	6.036e+05
169	53	6.070e+05	3287.11	-0.10	-420.00	0.0	6.446e+04	4765.30	-80.95	2.335e+04	3287.11	3.327e+05
		3.327e+05	-1512.36	4.16e-04	0.0	60.0	6.446e+04	4345.30	-80.95	2.335e+04	-1512.36	6.070e+05
169	54	6.074e+05	3296.06	-0.10	-420.00	0.0	6.444e+04	4765.92	-80.94	2.335e+04	3296.06	3.331e+05
		3.331e+05	-1502.73	4.16e-04	0.0	60.0	6.444e+04	4345.92	-80.94	2.335e+04	-1502.73	6.074e+05
169	56	6.057e+05	4076.87	-0.10	-420.00	0.0	6.422e+04	4746.23	-68.64	2.470e+04	4076.87	3.345e+05
		3.345e+05	-98.98	2.99e-04	0.0	60.0	6.422e+04	4326.23	-68.64	2.470e+04	-98.98	6.057e+05
169	58	6.074e+05	3286.47	-0.10	-420.00	0.0	6.444e+04	4765.92	-80.94	2.335e+04	3286.47	3.331e+05
		3.331e+05	-1513.02	4.16e-04	0.0	60.0	6.444e+04	4345.92	-80.94	2.335e+04	-1513.02	6.074e+05
169	59	6.053e+05	4077.51	-0.10	-420.00	0.0	6.424e+04	4745.61	-68.65	2.470e+04	4077.51	3.342e+05
		3.342e+05	-98.32	2.98e-04	0.0	60.0	6.424e+04	4325.61	-68.65	2.470e+04	-98.32	6.053e+05
169	85	6.063e+05	3681.99	-0.10	-420.00	0.0	6.434e+04	4755.76	-74.79	2.403e+04	3681.99	3.336e+05
		3.336e+05	-805.67	3.57e-04	0.0	60.0	6.434e+04	4335.76	-74.79	2.403e+04	-805.67	6.063e+05
169	86	5.814e+05	3518.98	-0.10	-420.00	0.0	6.171e+04	4569.76	-71.67	2.299e+04	3518.98	3.199e+05

Trave	Cmb	M3 mx/mn	M2 mx/mn	D 2 / D 3	Q 2 / Q 3	Pos.	N	V 2	V 3	T	M 2	M 3
		3.199e+05	-781.17	3.43e-04	0.0	60.0	6.171e+04	4149.76	-71.67	2.299e+04	-781.17	5.814e+05
169	87	1.597e+06	1.483e+04	-0.25	-420.00	0.0	1.563e+05	1.359e+04	-164.89	9.020e+04	1.483e+04	7.946e+05
		7.946e+05	4938.72	8.87e-04	0.0	60.0	1.563e+05	1.317e+04	-164.89	9.020e+04	4938.72	1.597e+06
169	88	5.773e+05	3491.91	-0.10	-420.00	0.0	6.127e+04	4538.76	-71.15	2.281e+04	3491.91	3.176e+05
		3.176e+05	-777.00	3.40e-04	0.0	60.0	6.127e+04	4118.76	-71.15	2.281e+04	-777.00	5.773e+05
169	96	6.063e+05	3681.99	-0.10	-420.00	0.0	6.434e+04	4755.76	-74.79	2.403e+04	3681.99	3.336e+05
		3.336e+05	-805.67	3.57e-04	0.0	60.0	6.434e+04	4335.76	-74.79	2.403e+04	-805.67	6.063e+05
169	97	1.521e+06	1.386e+04	-0.24	-420.00	0.0	1.495e+05	1.287e+04	-158.69	8.452e+04	1.386e+04	7.609e+05
		7.609e+05	4342.23	8.47e-04	0.0	60.0	1.495e+05	1.245e+04	-158.69	8.452e+04	4342.23	1.521e+06
169	98	6.043e+05	3668.45	-0.10	-420.00	0.0	6.412e+04	4740.26	-74.53	2.394e+04	3668.45	3.325e+05
		3.325e+05	-803.58	3.56e-04	0.0	60.0	6.412e+04	4320.26	-74.53	2.394e+04	-803.58	6.043e+05
169	102	6.063e+05	3681.99	-0.10	-420.00	0.0	6.434e+04	4755.76	-74.79	2.403e+04	3681.99	3.336e+05
		3.336e+05	-805.67	3.57e-04	0.0	60.0	6.434e+04	4335.76	-74.79	2.403e+04	-805.67	6.063e+05
170	1	8.372e+05	-1010.62	-0.11	-546.00	0.0	8.783e+04	4888.80	-40.96	2.488e+04	-1010.62	5.602e+05
		5.602e+05	-3468.40	3.87e-04	0.0	60.0	8.783e+04	4342.80	-40.96	2.488e+04	-3468.40	8.372e+05
170	2	2.667e+06	7569.21	-0.30	-546.00	0.0	2.507e+05	1.813e+04	-120.40	1.061e+05	7569.21	1.595e+06
		1.595e+06	345.40	1.11e-03	0.0	60.0	2.507e+05	1.759e+04	-120.40	1.061e+05	345.40	2.667e+06
170	7	6.274e+05	-762.66	-0.08	-420.00	0.0	6.583e+04	3669.69	-30.68	1.861e+04	-762.66	4.198e+05
		4.198e+05	-2603.62	2.90e-04	0.0	60.0	6.583e+04	3249.69	-30.68	1.861e+04	-2603.62	6.274e+05
170	8	2.457e+06	7817.18	-0.27	-420.00	0.0	2.287e+05	1.691e+04	-110.12	9.981e+04	7817.18	1.454e+06
		1.454e+06	1210.19	1.01e-03	0.0	60.0	2.287e+05	1.649e+04	-110.12	9.981e+04	1210.19	2.457e+06
170	21	6.743e+05	-2674.20	-0.09	-420.00	0.0	7.130e+04	3961.29	-48.94	1.840e+04	-2674.20	4.503e+05
		4.503e+05	-5521.55	4.49e-04	0.0	60.0	7.130e+04	3541.29	-48.94	1.840e+04	-5521.55	6.743e+05
170	24	6.777e+05	1062.87	-0.09	-420.00	0.0	7.052e+04	3911.88	-17.28	2.189e+04	1062.87	4.545e+05
		4.545e+05	-63.15	1.75e-04	0.0	60.0	7.052e+04	3491.88	-17.28	2.189e+04	-63.15	6.777e+05
170	26	6.751e+05	-2675.93	-0.09	-420.00	0.0	7.124e+04	3962.92	-48.92	1.840e+04	-2675.93	4.513e+05
		4.513e+05	-5523.18	4.49e-04	0.0	60.0	7.124e+04	3542.92	-48.92	1.840e+04	-5523.18	6.751e+05
170	27	6.769e+05	1064.60	-0.09	-420.00	0.0	7.058e+04	3910.26	-17.30	2.189e+04	1064.60	4.536e+05
		4.536e+05	-61.52	1.76e-04	0.0	60.0	7.058e+04	3490.26	-17.30	2.189e+04	-61.52	6.769e+05
170	40	6.778e+05	-206.79	-0.09	-420.00	0.0	7.070e+04	3931.66	-28.33	2.064e+04	-206.79	4.544e+05
		4.544e+05	-1936.67	2.71e-04	0.0	60.0	7.070e+04	3511.66	-28.33	2.064e+04	-1936.67	6.778e+05
170	53	6.754e+05	-1512.35	-0.09	-420.00	0.0	7.106e+04	3945.88	-39.10	1.947e+04	-1512.35	4.516e+05
		4.516e+05	-3824.68	3.64e-04	0.0	60.0	7.106e+04	3525.88	-39.10	1.947e+04	-3824.68	6.754e+05
170	56	6.767e+05	-98.98	-0.09	-420.00	0.0	7.076e+04	3927.29	-27.13	2.082e+04	-98.98	4.532e+05
		4.532e+05	-1760.02	2.61e-04	0.0	60.0	7.076e+04	3507.29	-27.13	2.082e+04	-1760.02	6.767e+05
170	58	6.757e+05	-1513.01	-0.09	-420.00	0.0	7.104e+04	3946.51	-39.09	1.947e+04	-1513.01	4.520e+05
		4.520e+05	-3825.31	3.64e-04	0.0	60.0	7.104e+04	3526.51	-39.09	1.947e+04	-3825.31	6.757e+05
170	59	6.763e+05	-98.32	-0.09	-420.00	0.0	7.079e+04	3926.67	-27.13	2.082e+04	-98.32	4.528e+05
		4.528e+05	-1759.40	2.61e-04	0.0	60.0	7.079e+04	3506.67	-27.13	2.082e+04	-1759.40	6.763e+05
170	72	6.767e+05	-579.05	-0.09	-420.00	0.0	7.083e+04	3934.75	-31.31	2.034e+04	-579.05	4.532e+05
		4.532e+05	-2468.58	2.97e-04	0.0	60.0	7.083e+04	3514.75	-31.31	2.034e+04	-2468.58	6.767e+05
170	85	6.760e+05	-805.67	-0.09	-420.00	0.0	7.091e+04	3936.59	-33.11	2.015e+04	-805.67	4.524e+05
		4.524e+05	-2792.35	3.12e-04	0.0	60.0	7.091e+04	3516.59	-33.11	2.015e+04	-2792.35	6.760e+05
170	86	6.482e+05	-781.17	-0.08	-420.00	0.0	6.801e+04	3784.08	-31.72	1.927e+04	-781.17	4.338e+05
		4.338e+05	-2684.58	3.00e-04	0.0	60.0	6.801e+04	3364.08	-31.72	1.927e+04	-2684.58	6.482e+05
170	87	1.868e+06	4938.72	-0.21	-420.00	0.0	1.766e+05	1.261e+04	-84.68	7.340e+04	4938.72	1.124e+06
		1.124e+06	-142.05	7.79e-04	0.0	60.0	1.766e+05	1.219e+04	-84.68	7.340e+04	-142.05	1.868e+06
170	88	6.436e+05	-776.99	-0.08	-420.00	0.0	6.752e+04	3758.66	-31.49	1.912e+04	-776.99	4.307e+05
		4.307e+05	-2666.53	2.97e-04	0.0	60.0	6.752e+04	3338.66	-31.49	1.912e+04	-2666.53	6.436e+05
170	89	1.863e+06	4942.90	-0.21	-420.00	0.0	1.761e+05	1.259e+04	-84.45	7.325e+04	4942.90	1.120e+06
		1.120e+06	-123.99	7.77e-04	0.0	60.0	1.761e+05	1.217e+04	-84.45	7.325e+04	-123.99	1.863e+06
170	96	6.760e+05	-805.67	-0.09	-420.00	0.0	7.091e+04	3936.59	-33.11	2.015e+04	-805.67	4.524e+05
		4.524e+05	-2792.35	3.12e-04	0.0	60.0	7.091e+04	3516.59	-33.11	2.015e+04	-2792.35	6.760e+05
170	97	1.774e+06	4342.24	-0.20	-420.00	0.0	1.686e+05	1.188e+04	-80.77	6.886e+04	4342.24	1.073e+06
		1.073e+06	-504.07	7.44e-04	0.0	60.0	1.686e+05	1.146e+04	-80.77	6.886e+04	-504.07	1.774e+06
170	98	6.737e+05	-803.58	-0.09	-420.00	0.0	7.067e+04	3923.88	-33.00	2.007e+04	-803.58	4.509e+05
		4.509e+05	-2783.33	3.11e-04	0.0	60.0	7.067e+04	3503.88	-33.00	2.007e+04	-2783.33	6.737e+05
170	102	6.760e+05	-805.67	-0.09	-420.00	0.0	7.091e+04	3936.59	-33.11	2.015e+04	-805.67	4.524e+05
		4.524e+05	-2792.35	3.12e-04	0.0	60.0	7.091e+04	3516.59	-33.11	2.015e+04	-2792.35	6.760e+05
171	1	9.000e+05	-3468.39	-0.09	-546.00	0.0	9.435e+04	3868.34	-13.13	1.972e+04	-3468.39	6.843e+05
		6.843e+05	-4256.28	3.08e-04	0.0	60.0	9.435e+04	3322.34	-13.13	1.972e+04	-4256.28	9.000e+05
171	2	2.839e+06	345.41	-0.24	-546.00	0.0	2.739e+05	1.224e+04	-48.02	7.419e+04	345.41	2.122e+06
		2.122e+06	-2536.09	8.25e-04	0.0	60.0	2.739e+05	1.169e+04	-48.02	7.419e+04	-2536.09	2.839e+06
171	7	6.746e+05	-2603.61	-0.07	-420.00	0.0	7.072e+04	2904.80	-9.83	1.476e+04	-2603.61	5.129e+05
		5.129e+05	-3193.50	2.31e-04	0.0	60.0	7.072e+04	2484.80	-9.83	1.476e+04	-3193.50	6.746e+05
171	8	2.614e+06	1210.19	-0.21	-420.00	0.0	2.503e+05	1.127e+04	-44.73	6.922e+04	1210.19	1.950e+06
		1.950e+06	-1473.31	7.48e-04	0.0	60.0	2.503e+05	1.085e+04	-44.73	6.922e+04	-1473.31	2.614e+06
171	21	7.253e+05	-5521.55	-0.07	-420.00	0.0	7.662e+04	3136.36	-24.48	1.433e+04	-5521.55	5.508e+05
		5.508e+05	-6922.91	3.61e-04	0.0	60.0	7.662e+04	2716.36	-24.48	1.433e+04	-6922.91	7.253e+05
171	24	7.282e+05	63.47	-0.07	-420.00	0.0	7.574e+04	3089.14	3.23	1.762e+04	-63.15	5.544e+05
		5.544e+05	-63.15	1.37e-04	0.0	60.0	7.574e+04	2669.14	3.23	1.762e+04	63.47	7.282e+05
171	26	7.259e+05	-5523.17	-0.07	-420.00	0.0	7.656e+04	3141.08	-24.47	1.433e+04	-5523.17	5.518e+05
		5.518e+05	-6924.28	3.60e-04	0.0	60.0	7.656e+04	2721.08	-24.47	1.433e+04	-6924.28	7.259e+05
171	27	7.276e+05	64.84	-0.07	-420.00	0.0	7.579e+04	3084.43	3.23	1.762e+04	-61.52	5.534e+05
		5.534e+05	-61.52	1.37e-04	0.0	60.0	7.579e+04	2664.43	3.23	1.762e+04	64.84	7.276e+05

Trave	Cmb	M3 mx/mn	M2 mx/mn	D 2 / D 3	Q 2 / Q 3	Pos.	N	V 2	V 3	T	M 2	M 3
171	32	7.282e+05	-398.79	-0.07	-420.00	0.0	7.580e+04	3087.89	4.42	1.756e+04	-606.65	5.545e+05
		5.545e+05	-606.65	1.29e-04	0.0	60.0	7.580e+04	2667.89	4.42	1.756e+04	-398.79	7.282e+05
171	41	7.253e+05	-3484.97	-0.07	-420.00	0.0	7.637e+04	3113.04	-15.05	1.556e+04	-3484.97	5.506e+05
		5.506e+05	-4370.64	2.85e-04	0.0	60.0	7.637e+04	2693.04	-15.05	1.556e+04	-4370.64	7.253e+05
171	53	7.262e+05	-3824.68	-0.07	-420.00	0.0	7.634e+04	3121.61	-15.86	1.535e+04	-3824.68	5.519e+05
		5.519e+05	-4750.95	2.91e-04	0.0	60.0	7.634e+04	2701.61	-15.86	1.535e+04	-4750.95	7.262e+05
171	56	7.273e+05	-1760.02	-0.07	-420.00	0.0	7.601e+04	3103.89	-5.39	1.661e+04	-1760.02	5.533e+05
		5.533e+05	-2108.49	2.06e-04	0.0	60.0	7.601e+04	2683.89	-5.39	1.661e+04	-2108.49	7.273e+05
171	58	7.264e+05	-3825.30	-0.07	-420.00	0.0	7.632e+04	3123.42	-15.86	1.535e+04	-3825.30	5.523e+05
		5.523e+05	-4751.48	2.91e-04	0.0	60.0	7.632e+04	2703.42	-15.86	1.535e+04	-4751.48	7.264e+05
171	59	7.271e+05	-1759.39	-0.07	-420.00	0.0	7.603e+04	3102.08	-5.39	1.661e+04	-1759.39	5.529e+05
		5.529e+05	-2107.96	2.07e-04	0.0	60.0	7.603e+04	2682.08	-5.39	1.661e+04	-2107.96	7.271e+05
171	64	7.273e+05	-1965.31	-0.07	-420.00	0.0	7.603e+04	3103.42	-4.94	1.658e+04	-1965.31	5.533e+05
		5.533e+05	-2283.15	2.03e-04	0.0	60.0	7.603e+04	2683.42	-4.94	1.658e+04	-2283.15	7.273e+05
171	73	7.262e+05	-3054.53	-0.07	-420.00	0.0	7.625e+04	3112.80	-12.30	1.582e+04	-3054.53	5.518e+05
		5.518e+05	-3785.75	2.63e-04	0.0	60.0	7.625e+04	2692.80	-12.30	1.582e+04	-3785.75	7.262e+05
171	85	7.268e+05	-2792.35	-0.07	-420.00	0.0	7.618e+04	3112.75	-10.62	1.598e+04	-2792.35	5.526e+05
		5.526e+05	-3429.72	2.49e-04	0.0	60.0	7.618e+04	2692.75	-10.62	1.598e+04	-3429.72	7.268e+05
171	86	6.969e+05	-2684.57	-0.07	-420.00	0.0	7.306e+04	2993.92	-10.17	1.528e+04	-2684.57	5.299e+05
		5.299e+05	-3294.81	2.39e-04	0.0	60.0	7.306e+04	2573.92	-10.17	1.528e+04	-3294.81	6.969e+05
171	87	1.990e+06	-142.04	-0.17	-420.00	0.0	1.928e+05	8572.55	-33.43	5.159e+04	-142.04	1.488e+06
		1.488e+06	-2148.02	5.83e-04	0.0	60.0	1.928e+05	8152.55	-33.43	5.159e+04	-2148.02	1.990e+06
171	88	6.920e+05	-2666.52	-0.07	-420.00	0.0	7.254e+04	2974.12	-10.10	1.516e+04	-2666.52	5.261e+05
		5.261e+05	-3272.24	2.37e-04	0.0	60.0	7.254e+04	2554.12	-10.10	1.516e+04	-3272.24	6.920e+05
171	89	1.985e+06	-123.99	-0.17	-420.00	0.0	1.923e+05	8552.74	-33.36	5.147e+04	-123.99	1.484e+06
		1.484e+06	-2125.45	5.81e-04	0.0	60.0	1.923e+05	8132.74	-33.36	5.147e+04	-2125.45	1.985e+06
171	96	7.268e+05	-2792.35	-0.07	-420.00	0.0	7.618e+04	3112.75	-10.62	1.598e+04	-2792.35	5.526e+05
		5.526e+05	-3429.72	2.49e-04	0.0	60.0	7.618e+04	2692.75	-10.62	1.598e+04	-3429.72	7.268e+05
171	97	1.890e+06	-504.06	-0.16	-420.00	0.0	1.839e+05	8133.51	-31.56	4.866e+04	-504.06	1.415e+06
		1.415e+06	-2397.61	5.59e-04	0.0	60.0	1.839e+05	7713.51	-31.56	4.866e+04	-2397.61	1.890e+06
171	98	7.243e+05	-2783.32	-0.07	-420.00	0.0	7.592e+04	3102.85	-10.59	1.592e+04	-2783.32	5.507e+05
		5.507e+05	-3418.43	2.48e-04	0.0	60.0	7.592e+04	2682.85	-10.59	1.592e+04	-3418.43	7.243e+05
171	102	7.268e+05	-2792.35	-0.07	-420.00	0.0	7.618e+04	3112.75	-10.62	1.598e+04	-2792.35	5.526e+05
		5.526e+05	-3429.72	2.49e-04	0.0	60.0	7.618e+04	2692.75	-10.62	1.598e+04	-3429.72	7.268e+05
172	1	9.396e+05	-4256.27	-0.06	-546.00	0.0	9.924e+04	2843.62	-0.88	1.430e+04	-4256.27	7.853e+05
		7.853e+05	-4309.21	2.21e-04	0.0	60.0	9.924e+04	2297.62	-0.88	1.430e+04	-4309.21	9.396e+05
172	2	2.865e+06	-2536.08	-0.16	-546.00	0.0	2.882e+05	6288.58	-2.86	3.863e+04	-2536.08	2.504e+06
		2.504e+06	-2707.65	4.88e-04	0.0	60.0	2.882e+05	5742.58	-2.86	3.863e+04	-2707.65	2.865e+06
172	7	7.042e+05	-3193.49	-0.05	-420.00	0.0	7.439e+04	2136.72	-0.66	1.069e+04	-3193.49	5.886e+05
		5.886e+05	-3232.82	1.66e-04	0.0	60.0	7.439e+04	1716.72	-0.66	1.069e+04	-3232.82	7.042e+05
172	8	2.630e+06	-1473.30	-0.15	-420.00	0.0	2.634e+05	5581.68	-2.63	3.503e+04	-1473.30	2.307e+06
		2.307e+06	-1631.27	4.33e-04	0.0	60.0	2.634e+05	5161.68	-2.63	3.503e+04	-1631.27	2.630e+06
172	21	7.566e+05	-6922.91	-0.05	-420.00	0.0	8.060e+04	2305.18	-11.34	1.021e+04	-6922.91	6.324e+05
		6.324e+05	-7549.74	2.60e-04	0.0	60.0	8.060e+04	1885.18	-11.34	1.021e+04	-7549.74	7.566e+05
172	24	7.607e+05	603.49	-0.05	-420.00	0.0	7.965e+04	2265.79	9.89	1.297e+04	63.47	6.359e+05
		6.359e+05	63.47	9.71e-05	0.0	60.0	7.965e+04	1845.79	9.89	1.297e+04	603.49	7.607e+05
172	26	7.570e+05	-6924.28	-0.05	-420.00	0.0	8.056e+04	2312.52	-11.34	1.021e+04	-6924.28	6.332e+05
		6.332e+05	-7550.73	2.59e-04	0.0	60.0	8.056e+04	1892.52	-11.34	1.021e+04	-7550.73	7.570e+05
172	27	7.603e+05	604.47	-0.05	-420.00	0.0	7.970e+04	2258.45	9.89	1.297e+04	64.84	6.351e+05
		6.351e+05	64.84	9.78e-05	0.0	60.0	7.970e+04	1838.45	9.89	1.297e+04	604.47	7.603e+05
172	29	7.567e+05	-6460.64	-0.05	-420.00	0.0	8.055e+04	2306.31	-13.20	1.031e+04	-6460.64	6.322e+05
		6.322e+05	-7215.80	2.73e-04	0.0	60.0	8.055e+04	1886.31	-13.20	1.031e+04	-7215.80	7.567e+05
172	53	7.579e+05	-4750.95	-0.05	-420.00	0.0	8.031e+04	2292.86	-4.73	1.106e+04	-4750.95	6.335e+05
		6.335e+05	-5014.89	2.09e-04	0.0	60.0	8.031e+04	1872.86	-4.73	1.106e+04	-5014.89	7.579e+05
172	56	7.595e+05	-1931.37	-0.05	-420.00	0.0	7.995e+04	2278.11	3.29	1.211e+04	-2108.48	6.348e+05
		6.348e+05	-2108.48	1.48e-04	0.0	60.0	7.995e+04	1858.11	3.29	1.211e+04	-1931.37	7.595e+05
172	58	7.581e+05	-4751.47	-0.05	-420.00	0.0	8.029e+04	2295.67	-4.73	1.106e+04	-4751.47	6.338e+05
		6.338e+05	-5015.27	2.09e-04	0.0	60.0	8.029e+04	1875.67	-4.73	1.106e+04	-5015.27	7.581e+05
172	59	7.593e+05	-1930.99	-0.05	-420.00	0.0	7.996e+04	2275.29	3.28	1.211e+04	-2107.96	6.345e+05
		6.345e+05	-2107.96	1.48e-04	0.0	60.0	7.996e+04	1855.29	3.28	1.211e+04	-1930.99	7.593e+05
172	61	7.579e+05	-4576.28	-0.05	-420.00	0.0	8.029e+04	2293.29	-5.44	1.110e+04	-4576.28	6.334e+05
		6.334e+05	-4888.68	2.14e-04	0.0	60.0	8.029e+04	1873.29	-5.44	1.110e+04	-4888.68	7.579e+05
172	85	7.587e+05	-3429.72	-0.05	-420.00	0.0	8.013e+04	2285.48	-0.72	1.159e+04	-3429.72	6.342e+05
		6.342e+05	-3473.13	1.78e-04	0.0	60.0	8.013e+04	1865.48	-0.72	1.159e+04	-3473.13	7.587e+05
172	86	7.275e+05	-3294.81	-0.05	-420.00	0.0	7.685e+04	2200.48	-0.68	1.108e+04	-3294.81	6.081e+05
		6.081e+05	-3335.89	1.71e-04	0.0	60.0	7.685e+04	1780.48	-0.68	1.108e+04	-3335.89	7.275e+05
172	87	2.011e+06	-2148.02	-0.11	-420.00	0.0	2.028e+05	4497.12	-2.00	2.730e+04	-2148.02	1.754e+06
		1.754e+06	-2268.19	3.49e-04	0.0	60.0	2.028e+05	4077.12	-2.00	2.730e+04	-2268.19	2.011e+06
172	88	7.224e+05	-3272.23	-0.05	-420.00	0.0	7.630e+04	2186.31	-0.68	1.099e+04	-3272.23	6.038e+05
		6.038e+05	-3312.92	1.70e-04	0.0	60.0	7.630e+04	1766.31	-0.68	1.099e+04	-3312.92	7.224e+05
172	89	2.006e+06	-2125.44	-0.11	-420.00	0.0	2.023e+05	4482.95	-2.00	2.721e+04	-2125.44	1.750e+06
		1.750e+06	-2245.22	3.48e-04	0.0	60.0	2.023e+05	4062.95	-2.00	2.721e+04	-2245.22	2.006e+06
172	96	7.587e+05	-3429.72	-0.05	-420.00	0.0	8.013e+04	2285.48	-0.72	1.159e+04	-3429.72	6.342e+05
		6.342e+05	-3473.13	1.78e-04	0.0	60.0	8.013e+04	1865.48	-0.72	1.159e+04	-3473.13	7.587e+05
172	97	1.914e+06	-2397.60	-0.11	-420.00	0.0	1.935e+05	4352.46	-1.91	2.619e+04	-2397.60	1.665e+06

Trave	Cmb	M3 mx/mn	M2 mx/mn	D 2 / D 3	Q 2 / Q 3	Pos.	N	V 2	V 3	T	M 2	M 3
		1.665e+06	-2512.20	3.39e-04	0.0	60.0	1.935e+05	3932.46	-1.91	2.619e+04	-2512.20	1.914e+06
172	98	7.561e+05	-3418.43	-0.05	-420.00	0.0	7.985e+04	2278.40	-0.72	1.155e+04	-3418.43	6.320e+05
		6.320e+05	-3461.65	1.78e-04	0.0	60.0	7.985e+04	1858.40	-0.72	1.155e+04	-3461.65	7.561e+05
172	102	7.587e+05	-3429.72	-0.05	-420.00	0.0	8.013e+04	2285.48	-0.72	1.159e+04	-3429.72	6.342e+05
		6.342e+05	-3473.13	1.78e-04	0.0	60.0	8.013e+04	1865.48	-0.72	1.159e+04	-3473.13	7.587e+05
173	1	9.557e+05	-4166.56	-0.04	-546.00	0.0	1.025e+05	1816.22	2.38	8658.45	-4309.20	8.631e+05
		8.631e+05	-4309.20	1.33e-04	0.0	60.0	1.025e+05	1270.22	2.38	8658.45	-4166.56	9.557e+05
173	2	2.754e+06	-1550.21	-0.08	-546.00	0.0	2.932e+05	329.15	19.29	2681.52	-2707.65	2.748e+06
		2.748e+06	-2707.65	1.49e-04	0.0	60.0	2.932e+05	-216.85	19.29	2681.52	-1550.21	2.751e+06
173	7	7.163e+05	-3125.75	-0.03	-420.00	0.0	7.683e+04	1366.63	1.78	6469.21	-3232.82	6.469e+05
		6.469e+05	-3232.82	9.94e-05	0.0	60.0	7.683e+04	946.63	1.78	6469.21	-3125.75	7.163e+05
173	8	2.531e+06	-509.40	-0.07	-420.00	0.0	2.676e+05	-120.44	18.70	492.28	-1631.26	2.531e+06
		2.512e+06	-1631.26	1.16e-04	0.0	60.0	2.676e+05	-540.44	18.70	492.28	-509.40	2.512e+06
173	21	7.692e+05	-7549.74	-0.03	-420.00	0.0	8.325e+04	1468.07	-4.42	6089.11	-7549.74	6.948e+05
		6.948e+05	-7773.95	1.54e-04	0.0	60.0	8.325e+04	1048.07	-4.42	6089.11	-7773.95	7.692e+05
173	24	7.742e+05	1057.44	-0.03	-420.00	0.0	8.228e+04	1444.01	8.24	7964.94	603.49	6.991e+05
		6.991e+05	603.49	6.02e-05	0.0	60.0	8.228e+04	1024.01	8.24	7964.94	1057.44	7.742e+05
173	26	7.694e+05	-7550.72	-0.03	-420.00	0.0	8.322e+04	1477.31	-4.41	6086.47	-7550.72	6.955e+05
		6.955e+05	-7774.47	1.53e-04	0.0	60.0	8.322e+04	1057.31	-4.41	6086.47	-7774.47	7.694e+05
173	27	7.741e+05	1057.96	-0.03	-420.00	0.0	8.230e+04	1434.77	8.24	7967.58	604.47	6.984e+05
		6.984e+05	604.47	6.11e-05	0.0	60.0	8.230e+04	1014.77	8.24	7967.58	1057.96	7.741e+05
173	29	7.693e+05	-7215.80	-0.03	-420.00	0.0	8.322e+04	1468.94	-6.72	6202.54	-7215.80	6.946e+05
		6.946e+05	-7599.29	1.70e-04	0.0	60.0	8.322e+04	1048.94	-6.72	6202.54	-7599.29	7.693e+05
173	53	7.708e+05	-5014.88	-0.03	-420.00	0.0	8.295e+04	1460.53	-0.48	6670.08	-5014.88	6.961e+05
		6.961e+05	-5028.14	1.25e-04	0.0	60.0	8.295e+04	1040.53	-0.48	6670.08	-5028.14	7.708e+05
173	56	7.727e+05	-1688.37	-0.03	-420.00	0.0	8.258e+04	1451.55	4.30	7383.97	-1931.37	6.978e+05
		6.978e+05	-1931.37	8.93e-05	0.0	60.0	8.258e+04	1031.55	4.30	7383.97	-1688.37	7.727e+05
173	58	7.708e+05	-5015.26	-0.03	-420.00	0.0	8.294e+04	1464.08	-0.47	6669.07	-5015.26	6.964e+05
		6.964e+05	-5028.33	1.24e-04	0.0	60.0	8.294e+04	1044.08	-0.47	6669.07	-5028.33	7.708e+05
173	59	7.726e+05	-1688.17	-0.03	-420.00	0.0	8.259e+04	1448.01	4.30	7384.98	-1930.99	6.975e+05
		6.975e+05	-1930.99	8.96e-05	0.0	60.0	8.259e+04	1028.01	4.30	7384.98	-1688.17	7.726e+05
173	61	7.708e+05	-4888.68	-0.03	-420.00	0.0	8.293e+04	1460.86	-1.35	6712.54	-4888.68	6.960e+05
		6.960e+05	-4962.12	1.31e-04	0.0	60.0	8.293e+04	1040.86	-1.35	6712.54	-4962.12	7.708e+05
173	85	7.717e+05	-3358.25	-0.03	-420.00	0.0	8.276e+04	1456.04	1.91	7027.03	-3473.12	6.969e+05
		6.969e+05	-3473.12	1.07e-04	0.0	60.0	8.276e+04	1036.04	1.91	7027.03	-3358.25	7.717e+05
173	86	7.400e+05	-3225.47	-0.03	-420.00	0.0	7.937e+04	1404.95	1.84	6709.24	-3335.88	6.683e+05
		6.683e+05	-3335.88	1.03e-04	0.0	60.0	7.937e+04	984.95	1.84	6709.24	-3225.47	7.400e+05
173	87	1.937e+06	-1481.24	-0.06	-420.00	0.0	2.065e+05	413.57	13.12	2724.62	-2268.18	1.925e+06
		1.925e+06	-2268.18	1.14e-04	0.0	60.0	2.065e+05	-6.43	13.12	2724.62	-1481.24	1.937e+06
173	88	7.347e+05	-3203.25	-0.03	-420.00	0.0	7.881e+04	1396.43	1.83	6655.15	-3312.92	6.636e+05
		6.636e+05	-3312.92	1.02e-04	0.0	60.0	7.881e+04	976.43	1.83	6655.15	-3203.25	7.347e+05
173	89	1.932e+06	-1459.02	-0.06	-420.00	0.0	2.060e+05	405.05	13.10	2670.53	-2245.22	1.920e+06
		1.920e+06	-2245.22	1.13e-04	0.0	60.0	2.060e+05	-14.95	13.10	2670.53	-1459.02	1.932e+06
173	96	7.717e+05	-3358.25	-0.03	-420.00	0.0	8.276e+04	1456.04	1.91	7027.03	-3473.12	6.969e+05
		6.969e+05	-3473.12	1.07e-04	0.0	60.0	8.276e+04	1036.04	1.91	7027.03	-3358.25	7.717e+05
173	97	1.849e+06	-1788.44	-0.06	-420.00	0.0	1.972e+05	563.80	12.06	3440.87	-2512.19	1.828e+06
		1.828e+06	-2512.19	1.17e-04	0.0	60.0	1.972e+05	143.80	12.06	3440.87	-1788.44	1.849e+06
173	98	7.691e+05	-3347.14	-0.03	-420.00	0.0	8.248e+04	1451.78	1.91	6999.98	-3461.64	6.946e+05
		6.946e+05	-3461.64	1.07e-04	0.0	60.0	8.248e+04	1031.78	1.91	6999.98	-3347.14	7.691e+05
173	102	7.717e+05	-3358.25	-0.03	-420.00	0.0	8.276e+04	1456.04	1.91	7027.03	-3473.12	6.969e+05
		6.969e+05	-3473.12	1.07e-04	0.0	60.0	8.276e+04	1036.04	1.91	7027.03	-3358.25	7.717e+05
174	1	9.483e+05	-4095.40	-0.01	-546.00	0.0	1.041e+05	787.40	1.19	2873.06	-4166.56	9.175e+05
		9.175e+05	-4166.56	4.44e-05	0.0	60.0	1.041e+05	241.40	1.19	2873.06	-4095.40	9.483e+05
174	2	2.843e+06	-503.89	-0.01	-546.00	0.0	2.893e+05	-5602.51	17.44	-3.047e+04	-1550.20	2.843e+06
		2.491e+06	-1550.20	-1.53e-04	0.0	60.0	2.893e+05	-6148.51	17.44	-3.047e+04	-503.89	2.491e+06
174	7	7.108e+05	-3072.41	-9.89e-03	-420.00	0.0	7.805e+04	595.47	0.89	2136.31	-3125.75	6.876e+05
		6.876e+05	-3125.75	3.33e-05	0.0	60.0	7.805e+04	175.47	0.89	2136.31	-3072.41	7.108e+05
174	8	2.614e+06	519.10	-0.01	-420.00	0.0	2.632e+05	-5794.43	17.14	-3.121e+04	-509.39	2.614e+06
		2.253e+06	-509.39	-1.64e-04	0.0	60.0	2.632e+05	-6214.43	17.14	-3.121e+04	519.10	2.253e+06
174	21	7.631e+05	-7771.47	-0.01	-420.00	0.0	8.456e+04	627.92	2.69	1944.26	-7773.95	7.388e+05
		7.388e+05	-7773.95	4.57e-05	0.0	60.0	8.456e+04	207.92	2.69	1944.26	-7771.47	7.631e+05
174	24	7.685e+05	1169.87	-0.01	-420.00	0.0	8.360e+04	622.99	-0.77	2754.46	1057.44	7.429e+05
		7.429e+05	1057.44	2.58e-05	0.0	60.0	8.360e+04	202.99	-0.77	2754.46	1169.87	7.685e+05
174	26	7.632e+05	-7771.47	-0.01	-420.00	0.0	8.455e+04	638.17	2.70	1941.36	-7774.47	7.388e+05
		7.388e+05	-7774.47	4.47e-05	0.0	60.0	8.455e+04	218.17	2.70	1941.36	-7771.47	7.632e+05
174	30	7.634e+05	-7591.26	-0.01	-420.00	0.0	8.454e+04	638.77	-3.12	1966.44	-7591.26	7.382e+05
		7.382e+05	-7771.81	6.28e-05	0.0	60.0	8.454e+04	218.77	-3.12	1966.44	-7771.81	7.634e+05
174	31	7.682e+05	1170.21	-0.01	-420.00	0.0	8.362e+04	612.14	5.03	2732.27	874.75	7.435e+05
		7.435e+05	874.75	8.73e-06	0.0	60.0	8.362e+04	192.14	5.03	2732.27	1170.21	7.682e+05
174	53	7.647e+05	-4991.43	-0.01	-420.00	0.0	8.426e+04	626.35	1.61	2195.61	-5028.13	7.401e+05
		7.401e+05	-5028.13	3.95e-05	0.0	60.0	8.426e+04	206.35	1.61	2195.61	-4991.43	7.647e+05
174	56	7.668e+05	-1610.17	-0.01	-420.00	0.0	8.390e+04	624.56	0.31	2503.11	-1688.37	7.416e+05
		7.416e+05	-1688.37	3.20e-05	0.0	60.0	8.390e+04	204.56	0.31	2503.11	-1610.17	7.668e+05
174	58	7.648e+05	-4991.43	-0.01	-420.00	0.0	8.426e+04	630.28	1.61	2194.50	-5028.33	7.401e+05
		7.401e+05	-5028.33	3.91e-05	0.0	60.0	8.426e+04	210.28	1.61	2194.50	-4991.43	7.648e+05

Trave	Cmb	M3 mx/mn	M2 mx/mn	D 2 / D 3	Q 2 / Q 3	Pos.	N	V 2	V 3	T	M 2	M 3
174	62	7.649e+05	-4959.06	-0.01	-420.00	0.0	8.425e+04	630.51	-0.58	2203.33	-4959.06	7.398e+05
		7.398e+05	-4991.56	4.60e-05	0.0	60.0	8.425e+04	210.51	-0.58	2203.33	-4991.56	7.649e+05
174	63	7.667e+05	-1610.04	-0.01	-420.00	0.0	8.390e+04	620.40	2.50	2495.38	-1757.45	7.419e+05
		7.419e+05	-1757.45	2.55e-05	0.0	60.0	8.390e+04	200.40	2.50	2495.38	-1610.04	7.667e+05
174	85	7.658e+05	-3300.80	-0.01	-420.00	0.0	8.408e+04	625.46	0.96	2349.36	-3358.25	7.408e+05
		7.408e+05	-3358.25	3.58e-05	0.0	60.0	8.408e+04	205.46	0.96	2349.36	-3300.80	7.658e+05
174	86	7.343e+05	-3170.37	-0.01	-420.00	0.0	8.064e+04	608.33	0.92	2228.62	-3225.47	7.104e+05
		7.104e+05	-3225.47	3.44e-05	0.0	60.0	8.064e+04	188.33	0.92	2228.62	-3170.37	7.343e+05
174	87	1.994e+06	-776.03	-9.72e-03	-420.00	0.0	2.041e+05	-3651.61	11.75	-2.000e+04	-1481.23	1.994e+06
		1.763e+06	-1481.23	-9.75e-05	0.0	60.0	2.041e+05	-4071.61	11.75	-2.000e+04	-776.03	1.763e+06
174	88	7.291e+05	-3148.54	-0.01	-420.00	0.0	8.006e+04	605.46	0.91	2207.33	-3203.25	7.054e+05
		7.054e+05	-3203.25	3.41e-05	0.0	60.0	8.006e+04	185.46	0.91	2207.33	-3148.54	7.291e+05
174	89	1.989e+06	-754.20	-9.65e-03	-420.00	0.0	2.035e+05	-3654.47	11.75	-2.002e+04	-1459.01	1.989e+06
		1.757e+06	-1459.01	-9.77e-05	0.0	60.0	2.035e+05	-4074.47	11.75	-2.002e+04	-754.20	1.757e+06
174	96	7.658e+05	-3300.80	-0.01	-420.00	0.0	8.408e+04	625.46	0.96	2349.36	-3358.25	7.408e+05
		7.408e+05	-3358.25	3.58e-05	0.0	60.0	8.408e+04	205.46	0.96	2349.36	-3300.80	7.658e+05
174	97	1.896e+06	-1145.89	-9.99e-03	-420.00	0.0	1.952e+05	-3208.49	10.71	-1.766e+04	-1788.44	1.896e+06
		1.691e+06	-1788.44	-8.29e-05	0.0	60.0	1.952e+05	-3628.49	10.71	-1.766e+04	-1145.89	1.691e+06
174	98	7.631e+05	-3289.88	-0.01	-420.00	0.0	8.379e+04	624.02	0.95	2338.71	-3347.14	7.383e+05
		7.383e+05	-3347.14	3.56e-05	0.0	60.0	8.379e+04	204.02	0.95	2338.71	-3289.88	7.631e+05
174	102	7.658e+05	-3300.80	-0.01	-420.00	0.0	8.408e+04	625.46	0.96	2349.36	-3358.25	7.408e+05
		7.408e+05	-3358.25	3.58e-05	0.0	60.0	8.408e+04	205.46	0.96	2349.36	-3300.80	7.658e+05
175	1	9.484e+05	-4095.40	0.01	-546.00	0.0	1.041e+05	-241.87	-1.33	-2962.39	-4095.40	9.484e+05
		9.175e+05	-4175.04	-4.34e-05	0.0	60.0	1.041e+05	-787.87	-1.33	-2962.39	-4175.04	9.175e+05
175	2	2.719e+06	-503.88	0.07	-546.00	0.0	2.795e+05	-6950.41	-8.41	-5.751e+04	-503.88	2.719e+06
		2.286e+06	-1008.77	-3.91e-04	0.0	60.0	2.795e+05	-7496.41	-8.41	-5.751e+04	-1008.77	2.286e+06
175	7	7.108e+05	-3072.41	9.89e-03	-420.00	0.0	7.805e+04	-176.03	-1.00	-2234.19	-3072.41	7.108e+05
		6.876e+05	-3132.25	-3.25e-05	0.0	60.0	7.805e+04	-596.03	-1.00	-2234.19	-3132.25	6.876e+05
175	8	2.482e+06	519.11	0.06	-420.00	0.0	2.534e+05	-6884.57	-8.08	-5.678e+04	519.11	2.482e+06
		2.056e+06	34.02	-3.80e-04	0.0	60.0	2.534e+05	-7304.57	-8.08	-5.678e+04	34.02	2.056e+06
175	21	7.634e+05	-7597.94	0.01	-420.00	0.0	8.454e+04	-218.80	3.01	-1984.61	-7771.64	7.634e+05
		7.382e+05	-7771.64	-6.22e-05	0.0	60.0	8.454e+04	-638.80	3.01	-1984.61	-7597.94	7.382e+05
175	30	7.631e+05	-7771.64	0.01	-420.00	0.0	8.456e+04	-207.95	-2.83	-1963.03	-7771.64	7.631e+05
		7.388e+05	-7780.96	-4.51e-05	0.0	60.0	8.456e+04	-627.95	-2.83	-1963.03	-7780.96	7.388e+05
175	31	7.685e+05	1170.04	0.01	-420.00	0.0	8.360e+04	-203.02	0.69	-2774.11	1170.04	7.685e+05
		7.429e+05	1051.32	-2.52e-05	0.0	60.0	8.360e+04	-623.02	0.69	-2774.11	1051.32	7.429e+05
175	32	7.683e+05	1170.21	0.01	-420.00	0.0	8.361e+04	-192.74	0.56	-2852.79	1170.21	7.683e+05
		7.433e+05	1043.33	-2.62e-05	0.0	60.0	8.361e+04	-612.74	0.56	-2852.79	1043.33	7.433e+05
175	33	7.632e+05	-7771.64	0.01	-420.00	0.0	8.455e+04	-218.19	-2.83	-1960.13	-7771.64	7.632e+05
		7.388e+05	-7781.48	-4.41e-05	0.0	60.0	8.455e+04	-638.19	-2.83	-1960.13	-7781.48	7.388e+05
175	53	7.649e+05	-4965.67	0.01	-420.00	0.0	8.425e+04	-210.54	0.47	-2222.16	-4991.49	7.649e+05
		7.398e+05	-4991.49	-4.54e-05	0.0	60.0	8.425e+04	-630.54	0.47	-2222.16	-4965.67	7.398e+05
175	62	7.647e+05	-4991.49	0.01	-420.00	0.0	8.426e+04	-206.38	-1.73	-2214.65	-4991.49	7.647e+05
		7.401e+05	-5034.87	-3.89e-05	0.0	60.0	8.426e+04	-626.38	-1.73	-2214.65	-5034.87	7.401e+05
175	63	7.668e+05	-1610.10	0.01	-420.00	0.0	8.390e+04	-204.59	-0.40	-2522.48	-1610.10	7.668e+05
		7.416e+05	-1694.77	-3.14e-05	0.0	60.0	8.390e+04	-624.59	-0.40	-2522.48	-1694.77	7.416e+05
175	64	7.667e+05	-1610.04	0.01	-420.00	0.0	8.390e+04	-200.65	-0.45	-2552.58	-1610.04	7.667e+05
		7.418e+05	-1697.81	-3.18e-05	0.0	60.0	8.390e+04	-620.65	-0.45	-2552.58	-1697.81	7.418e+05
175	65	7.648e+05	-4991.49	0.01	-420.00	0.0	8.426e+04	-210.31	-1.73	-2213.54	-4991.49	7.648e+05
		7.401e+05	-5035.07	-3.85e-05	0.0	60.0	8.426e+04	-630.31	-1.73	-2213.54	-5035.07	7.401e+05
175	85	7.658e+05	-3300.80	0.01	-420.00	0.0	8.408e+04	-205.49	-1.07	-2368.57	-3300.80	7.658e+05
		7.408e+05	-3364.82	-3.52e-05	0.0	60.0	8.408e+04	-625.49	-1.07	-2368.57	-3364.82	7.408e+05
175	86	7.343e+05	-3170.37	0.01	-420.00	0.0	8.064e+04	-188.64	-1.03	-2290.74	-3170.37	7.343e+05
		7.104e+05	-3232.00	-3.36e-05	0.0	60.0	8.064e+04	-608.64	-1.03	-2290.74	-3232.00	7.104e+05
175	87	1.915e+06	-776.03	0.05	-420.00	0.0	1.975e+05	-4661.01	-5.75	-3.865e+04	-776.03	1.915e+06
		1.623e+06	-1121.16	-2.65e-04	0.0	60.0	1.975e+05	-5081.01	-5.75	-3.865e+04	-1121.16	1.623e+06
175	88	7.291e+05	-3148.54	0.01	-420.00	0.0	8.006e+04	-185.85	-1.02	-2278.98	-3148.54	7.291e+05
		7.054e+05	-3209.77	-3.34e-05	0.0	60.0	8.006e+04	-605.85	-1.02	-2278.98	-3209.77	7.054e+05
175	89	1.910e+06	-754.20	0.05	-420.00	0.0	1.970e+05	-4658.21	-5.75	-3.864e+04	-754.20	1.910e+06
		1.618e+06	-1098.92	-2.65e-04	0.0	60.0	1.970e+05	-5078.21	-5.75	-3.864e+04	-1098.92	1.618e+06
175	96	7.658e+05	-3300.80	0.01	-420.00	0.0	8.408e+04	-205.49	-1.07	-2368.57	-3300.80	7.658e+05
		7.408e+05	-3364.82	-3.52e-05	0.0	60.0	8.408e+04	-625.49	-1.07	-2368.57	-3364.82	7.408e+05
175	97	1.828e+06	-1145.89	0.04	-420.00	0.0	1.893e+05	-4230.61	-5.32	-3.509e+04	-1145.89	1.828e+06
		1.562e+06	-1465.06	-2.44e-04	0.0	60.0	1.893e+05	-4650.61	-5.32	-3.509e+04	-1465.06	1.562e+06
175	98	7.632e+05	-3289.88	0.01	-420.00	0.0	8.379e+04	-204.09	-1.06	-2362.69	-3289.88	7.632e+05
		7.383e+05	-3353.70	-3.50e-05	0.0	60.0	8.379e+04	-624.09	-1.06	-2362.69	-3353.70	7.383e+05
175	102	7.658e+05	-3300.80	0.01	-420.00	0.0	8.408e+04	-205.49	-1.07	-2368.57	-3300.80	7.658e+05
		7.408e+05	-3364.82	-3.52e-05	0.0	60.0	8.408e+04	-625.49	-1.07	-2368.57	-3364.82	7.408e+05
176	1	9.557e+05	-4175.04	0.04	-546.00	0.0	1.025e+05	-1270.73	-2.52	-8745.26	-4175.04	9.557e+05
		8.631e+05	-4326.20	-1.32e-04	0.0	60.0	1.025e+05	-1816.73	-2.52	-8745.26	-4326.20	8.631e+05
176	2	2.577e+06	-1008.76	0.13	-546.00	0.0	2.671e+05	-8305.63	-33.51	-7.905e+04	-1008.76	2.577e+06
		2.063e+06	-3019.27	-5.86e-04	0.0	60.0	2.671e+05	-8851.63	-33.51	-7.905e+04	-3019.27	2.063e+06
176	7	7.163e+05	-3132.25	0.03	-420.00	0.0	7.683e+04	-947.23	-1.89	-6565.23	-3132.25	7.163e+05
		6.468e+05	-3245.85	-9.86e-05	0.0	60.0	7.683e+04	-1367.23	-1.89	-6565.23	-3245.85	6.468e+05
176	8	2.338e+06	34.03	0.12	-420.00	0.0	2.414e+05	-7982.13	-32.88	-7.687e+04	34.03	2.338e+06

Trave	Cmb	M3 mx/mn	M2 mx/mn	D 2 / D 3	Q 2 / Q 3	Pos.	N	V 2	V 3	T	M 2	M 3
		1.846e+06	-1938.92	-5.53e-04	0.0	60.0	2.414e+05	-8402.13	-32.88	-7.687e+04	-1938.92	1.846e+06
176	22	7.693e+05	-7229.27	0.03	-420.00	0.0	8.322e+04	-1049.01	6.61	-6219.00	-7605.94	7.693e+05
		6.946e+05	-7605.94	-1.69e-04	0.0	60.0	8.322e+04	-1469.01	6.61	-6219.00	-7229.27	6.946e+05
176	30	7.692e+05	-7563.57	0.03	-420.00	0.0	8.325e+04	-1048.10	4.31	-6106.39	-7780.96	7.692e+05
		6.948e+05	-7780.96	-1.53e-04	0.0	60.0	8.325e+04	-1468.10	4.31	-6106.39	-7563.57	6.948e+05
176	31	7.742e+05	1051.32	0.03	-420.00	0.0	8.227e+04	-1024.07	-8.36	-7981.89	1051.32	7.742e+05
		6.991e+05	591.03	-5.97e-05	0.0	60.0	8.227e+04	-1444.07	-8.36	-7981.89	591.03	6.991e+05
176	33	7.694e+05	-7564.56	0.03	-420.00	0.0	8.322e+04	-1057.35	4.31	-6103.75	-7781.48	7.694e+05
		6.955e+05	-7781.48	-1.52e-04	0.0	60.0	8.322e+04	-1477.35	4.31	-6103.75	-7564.56	6.955e+05
176	36	7.741e+05	1051.84	0.03	-420.00	0.0	8.230e+04	-1014.82	-8.35	-7984.53	1051.84	7.741e+05
		6.984e+05	592.02	-6.06e-05	0.0	60.0	8.230e+04	-1434.82	-8.35	-7984.53	592.02	6.984e+05
176	54	7.708e+05	-4901.95	0.03	-420.00	0.0	8.293e+04	-1040.91	1.24	-6729.41	-4968.72	7.708e+05
		6.961e+05	-4968.72	-1.30e-04	0.0	60.0	8.293e+04	-1460.91	1.24	-6729.41	-4901.95	6.961e+05
176	62	7.708e+05	-5028.29	0.03	-420.00	0.0	8.295e+04	-1040.57	0.37	-6687.25	-5034.87	7.708e+05
		6.961e+05	-5034.87	-1.24e-04	0.0	60.0	8.295e+04	-1460.57	0.37	-6687.25	-5028.29	6.961e+05
176	63	7.727e+05	-1694.77	0.03	-420.00	0.0	8.258e+04	-1031.60	-4.42	-7401.03	-1694.77	7.727e+05
		6.978e+05	-1944.25	-8.87e-05	0.0	60.0	8.258e+04	-1451.60	-4.42	-7401.03	-1944.25	6.978e+05
176	65	7.708e+05	-5028.67	0.03	-420.00	0.0	8.294e+04	-1044.12	0.37	-6686.24	-5035.07	7.708e+05
		6.964e+05	-5035.07	-1.24e-04	0.0	60.0	8.294e+04	-1464.12	0.37	-6686.24	-5028.67	6.964e+05
176	68	7.726e+05	-1694.57	0.03	-420.00	0.0	8.259e+04	-1028.05	-4.41	-7402.04	-1694.57	7.726e+05
		6.975e+05	-1943.87	-8.91e-05	0.0	60.0	8.259e+04	-1448.05	-4.41	-7402.04	-1943.87	6.975e+05
176	85	7.717e+05	-3364.82	0.03	-420.00	0.0	8.276e+04	-1036.08	-2.02	-7044.14	-3364.82	7.717e+05
		6.970e+05	-3486.27	-1.06e-04	0.0	60.0	8.276e+04	-1456.08	-2.02	-7044.14	-3486.27	6.970e+05
176	86	7.400e+05	-3232.00	0.03	-420.00	0.0	7.937e+04	-985.30	-1.95	-6769.39	-3232.00	7.400e+05
		6.683e+05	-3348.97	-1.02e-04	0.0	60.0	7.937e+04	-1405.30	-1.95	-6769.39	-3348.97	6.683e+05
176	87	1.821e+06	-1121.15	0.09	-420.00	0.0	1.891e+05	-5675.23	-22.61	-5.364e+04	-1121.15	1.821e+06
		1.468e+06	-2477.68	-4.05e-04	0.0	60.0	1.891e+05	-6095.23	-22.61	-5.364e+04	-2477.68	1.468e+06
176	88	7.348e+05	-3209.77	0.03	-420.00	0.0	7.881e+04	-976.85	-1.94	-6724.87	-3209.77	7.348e+05
		6.635e+05	-3325.99	-1.01e-04	0.0	60.0	7.881e+04	-1396.85	-1.94	-6724.87	-3325.99	6.635e+05
176	89	1.816e+06	-1098.92	0.09	-420.00	0.0	1.885e+05	-5666.78	-22.60	-5.359e+04	-1098.92	1.816e+06
		1.463e+06	-2454.70	-4.04e-04	0.0	60.0	1.885e+05	-6086.78	-22.60	-5.359e+04	-2454.70	1.463e+06
176	96	7.717e+05	-3364.82	0.03	-420.00	0.0	8.276e+04	-1036.08	-2.02	-7044.14	-3364.82	7.717e+05
		6.970e+05	-3486.27	-1.06e-04	0.0	60.0	8.276e+04	-1456.08	-2.02	-7044.14	-3486.27	6.970e+05
176	97	1.745e+06	-1465.05	0.09	-420.00	0.0	1.815e+05	-5257.02	-20.62	-4.923e+04	-1465.05	1.745e+06
		1.417e+06	-2702.11	-3.79e-04	0.0	60.0	1.815e+05	-5677.02	-20.62	-4.923e+04	-2702.11	1.417e+06
176	98	7.691e+05	-3353.71	0.03	-420.00	0.0	8.248e+04	-1031.86	-2.02	-7021.88	-3353.71	7.691e+05
		6.946e+05	-3474.78	-1.06e-04	0.0	60.0	8.248e+04	-1451.86	-2.02	-7021.88	-3474.78	6.946e+05
176	102	7.717e+05	-3364.82	0.03	-420.00	0.0	8.276e+04	-1036.08	-2.02	-7044.14	-3364.82	7.717e+05
		6.970e+05	-3486.27	-1.06e-04	0.0	60.0	8.276e+04	-1456.08	-2.02	-7044.14	-3486.27	6.970e+05
177	2	2.408e+06	-3019.26	0.20	-546.00	0.0	2.524e+05	-9729.01	-23.47	-9.593e+04	-3019.26	2.408e+06
		1.808e+06	-4427.45	-7.61e-04	0.0	60.0	2.524e+05	-1.028e+04	-23.47	-9.593e+04	-4427.45	1.808e+06
177	7	7.042e+05	-3212.91	0.05	-420.00	0.0	7.438e+04	-1717.41	0.55	-1.079e+04	-3245.85	7.042e+05
		5.885e+05	-3245.85	-1.65e-04	0.0	60.0	7.438e+04	-2137.41	0.55	-1.079e+04	-3212.91	5.885e+05
177	8	2.172e+06	-1938.91	0.18	-420.00	0.0	2.275e+05	-9148.20	-23.67	-9.233e+04	-1938.91	2.172e+06
		1.611e+06	-3358.84	-7.06e-04	0.0	60.0	2.275e+05	-9568.20	-23.67	-9.233e+04	-3358.84	1.611e+06
177	22	7.567e+05	-6480.60	0.05	-420.00	0.0	8.055e+04	-1886.41	13.09	-1.032e+04	-7229.27	7.567e+05
		6.322e+05	-7229.27	-2.72e-04	0.0	60.0	8.055e+04	-2306.41	13.09	-1.032e+04	-6480.60	6.322e+05
177	30	7.567e+05	-6943.11	0.05	-420.00	0.0	8.060e+04	-1885.23	11.23	-1.023e+04	-7563.57	7.567e+05
		6.324e+05	-7563.57	-2.59e-04	0.0	60.0	8.060e+04	-2305.23	11.23	-1.023e+04	-6943.11	6.324e+05
177	31	7.607e+05	591.03	0.05	-420.00	0.0	7.965e+04	-1845.87	-10.00	-1.298e+04	591.03	7.607e+05
		6.359e+05	44.77	-9.66e-05	0.0	60.0	7.965e+04	-2265.87	-10.00	-1.298e+04	44.77	6.359e+05
177	33	7.571e+05	-6944.48	0.05	-420.00	0.0	8.056e+04	-1892.56	11.23	-1.022e+04	-7564.56	7.571e+05
		6.332e+05	-7564.56	-2.59e-04	0.0	60.0	8.056e+04	-2312.56	11.23	-1.022e+04	-6944.48	6.332e+05
177	36	7.603e+05	592.02	0.05	-420.00	0.0	7.970e+04	-1838.54	-9.99	-1.298e+04	592.02	7.603e+05
		6.351e+05	46.14	-9.74e-05	0.0	60.0	7.970e+04	-2258.54	-9.99	-1.298e+04	46.14	6.351e+05
177	54	7.579e+05	-4595.93	0.05	-420.00	0.0	8.029e+04	-1873.36	5.33	-1.111e+04	-4901.95	7.579e+05
		6.334e+05	-4901.95	-2.14e-04	0.0	60.0	8.029e+04	-2293.36	5.33	-1.111e+04	-4595.93	6.334e+05
177	62	7.579e+05	-4770.68	0.05	-420.00	0.0	8.031e+04	-1872.92	4.63	-1.108e+04	-5028.29	7.579e+05
		6.335e+05	-5028.29	-2.09e-04	0.0	60.0	8.031e+04	-2292.92	4.63	-1.108e+04	-4770.68	6.335e+05
177	63	7.595e+05	-1944.25	0.05	-420.00	0.0	7.995e+04	-1858.18	-3.39	-1.213e+04	-1944.25	7.595e+05
		6.348e+05	-2127.66	-1.47e-04	0.0	60.0	7.995e+04	-2278.18	-3.39	-1.213e+04	-2127.66	6.348e+05
177	65	7.581e+05	-4771.21	0.05	-420.00	0.0	8.029e+04	-1875.73	4.63	-1.108e+04	-5028.67	7.581e+05
		6.338e+05	-5028.67	-2.08e-04	0.0	60.0	8.029e+04	-2295.73	4.63	-1.108e+04	-4771.21	6.338e+05
177	68	7.593e+05	-1943.87	0.05	-420.00	0.0	7.996e+04	-1855.37	-3.39	-1.213e+04	-1943.87	7.593e+05
		6.345e+05	-2127.13	-1.48e-04	0.0	60.0	7.996e+04	-2275.37	-3.39	-1.213e+04	-2127.13	6.345e+05
177	85	7.587e+05	-3449.17	0.05	-420.00	0.0	8.013e+04	-1865.55	0.62	-1.160e+04	-3486.27	7.587e+05
		6.342e+05	-3486.27	-1.78e-04	0.0	60.0	8.013e+04	-2285.55	0.62	-1.160e+04	-3449.17	6.342e+05
177	87	1.706e+06	-2477.68	0.14	-420.00	0.0	1.789e+05	-6734.75	-15.56	-6.550e+04	-2477.68	1.706e+06
		1.290e+06	-3411.53	-5.31e-04	0.0	60.0	1.789e+05	-7154.75	-15.56	-6.550e+04	-3411.53	1.290e+06
177	88	7.224e+05	-3291.67	0.05	-420.00	0.0	7.630e+04	-1766.79	0.57	-1.106e+04	-3325.99	7.224e+05
		6.038e+05	-3325.99	-1.69e-04	0.0	60.0	7.630e+04	-2186.79	0.57	-1.106e+04	-3291.67	6.038e+05
177	89	1.701e+06	-2454.70	0.14	-420.00	0.0	1.784e+05	-6720.65	-15.57	-6.542e+04	-2454.70	1.701e+06
		1.285e+06	-3388.95	-5.30e-04	0.0	60.0	1.784e+05	-7140.65	-15.57	-6.542e+04	-3388.95	1.285e+06
177	97	1.640e+06	-2702.11	0.13	-420.00	0.0	1.720e+05	-6324.02	-13.91	-6.053e+04	-2702.11	1.640e+06
		1.248e+06	-3536.72	-5.02e-04	0.0	60.0	1.720e+05	-6744.02	-13.91	-6.053e+04	-3536.72	1.248e+06

Trave	Cmb	M3 mx/mn	M2 mx/mn	D 2 / D 3	Q 2 / Q 3	Pos.	N	V 2	V 3	T	M 2	M 3
177	98	7.561e+05	-3437.88	0.05	-420.00	0.0	7.985e+04	-1858.50	0.62	-1.156e+04	-3474.78	7.561e+05
		6.320e+05	-3474.78	-1.77e-04	0.0	60.0	7.985e+04	-2278.50	0.62	-1.156e+04	-3437.88	6.320e+05
177	102	7.587e+05	-3449.17	0.05	-420.00	0.0	8.013e+04	-1865.55	0.62	-1.160e+04	-3486.27	7.587e+05
		6.342e+05	-3486.27	-1.78e-04	0.0	60.0	8.013e+04	-2285.55	0.62	-1.160e+04	-3449.17	6.342e+05
178	2	2.207e+06	-3288.39	0.25	-546.00	0.0	2.353e+05	-1.121e+04	18.98	-1.088e+05	-4427.45	2.207e+06
		1.518e+06	-4427.45	-9.17e-04	0.0	60.0	2.353e+05	-1.175e+04	18.98	-1.088e+05	-3288.39	1.518e+06
178	7	6.746e+05	-2628.85	0.07	-420.00	0.0	7.071e+04	-2485.63	9.73	-1.484e+04	-3212.92	6.746e+05
		5.128e+05	-3212.92	-2.30e-04	0.0	60.0	7.071e+04	-2905.63	9.73	-1.484e+04	-2628.85	5.128e+05
178	8	1.981e+06	-2416.29	0.23	-420.00	0.0	2.117e+05	-1.037e+04	15.71	-1.039e+05	-3358.83	1.981e+06
		1.346e+06	-3358.83	-8.40e-04	0.0	60.0	2.117e+05	-1.079e+04	15.71	-1.039e+05	-2416.29	1.346e+06
178	23	7.283e+05	-417.74	0.07	-420.00	0.0	7.580e+04	-2667.96	-4.51	-1.756e+04	-417.74	7.283e+05
		5.545e+05	-630.84	-1.28e-04	0.0	60.0	7.580e+04	-3087.96	-4.51	-1.756e+04	-630.84	5.545e+05
178	30	7.253e+05	-5546.59	0.07	-420.00	0.0	7.662e+04	-2716.43	24.38	-1.434e+04	-6943.11	7.253e+05
		5.508e+05	-6943.11	-3.60e-04	0.0	60.0	7.662e+04	-3136.43	24.38	-1.434e+04	-5546.59	5.508e+05
178	31	7.283e+05	44.77	0.07	-420.00	0.0	7.573e+04	-2669.26	-3.31	-1.763e+04	44.77	7.283e+05
		5.544e+05	-87.51	-1.36e-04	0.0	60.0	7.573e+04	-3089.26	-3.31	-1.763e+04	-87.51	5.544e+05
178	33	7.259e+05	-5548.22	0.07	-420.00	0.0	7.656e+04	-2721.15	24.38	-1.434e+04	-6944.48	7.259e+05
		5.518e+05	-6944.48	-3.60e-04	0.0	60.0	7.656e+04	-3141.15	24.38	-1.434e+04	-5548.22	5.518e+05
178	36	7.276e+05	46.14	0.07	-420.00	0.0	7.579e+04	-2664.55	-3.31	-1.763e+04	46.14	7.276e+05
		5.534e+05	-85.88	-1.37e-04	0.0	60.0	7.579e+04	-3084.55	-3.31	-1.763e+04	-85.88	5.534e+05
178	38	7.254e+05	-3509.86	0.07	-420.00	0.0	7.637e+04	-2693.14	14.96	-1.557e+04	-4390.24	7.254e+05
		5.506e+05	-4390.24	-2.85e-04	0.0	60.0	7.637e+04	-3113.14	14.96	-1.557e+04	-3509.86	5.506e+05
178	55	7.274e+05	-1989.82	0.07	-420.00	0.0	7.603e+04	-2683.51	4.85	-1.659e+04	-2302.41	7.274e+05
		5.533e+05	-2302.41	-2.03e-04	0.0	60.0	7.603e+04	-3103.51	4.85	-1.659e+04	-1989.82	5.533e+05
178	62	7.262e+05	-3849.51	0.07	-420.00	0.0	7.634e+04	-2701.70	15.77	-1.535e+04	-4770.69	7.262e+05
		5.519e+05	-4770.69	-2.91e-04	0.0	60.0	7.634e+04	-3121.70	15.77	-1.535e+04	-3849.51	5.519e+05
178	63	7.273e+05	-1784.59	0.07	-420.00	0.0	7.601e+04	-2684.00	5.30	-1.661e+04	-2127.66	7.273e+05
		5.533e+05	-2127.66	-2.06e-04	0.0	60.0	7.601e+04	-3104.00	5.30	-1.661e+04	-1784.59	5.533e+05
178	65	7.265e+05	-3850.13	0.07	-420.00	0.0	7.632e+04	-2703.51	15.77	-1.535e+04	-4771.21	7.265e+05
		5.523e+05	-4771.21	-2.91e-04	0.0	60.0	7.632e+04	-3123.51	15.77	-1.535e+04	-3850.13	5.523e+05
178	68	7.271e+05	-1783.97	0.07	-420.00	0.0	7.603e+04	-2682.19	5.31	-1.662e+04	-2127.13	7.271e+05
		5.529e+05	-2127.13	-2.06e-04	0.0	60.0	7.603e+04	-3102.19	5.31	-1.662e+04	-1783.97	5.529e+05
178	70	7.262e+05	-3079.30	0.07	-420.00	0.0	7.625e+04	-2692.90	12.21	-1.583e+04	-3805.26	7.262e+05
		5.519e+05	-3805.26	-2.62e-04	0.0	60.0	7.625e+04	-3112.90	12.21	-1.583e+04	-3079.30	5.519e+05
178	85	7.268e+05	-2817.05	0.07	-420.00	0.0	7.617e+04	-2692.85	10.54	-1.598e+04	-3449.17	7.268e+05
		5.526e+05	-3449.17	-2.48e-04	0.0	60.0	7.617e+04	-3112.85	10.54	-1.598e+04	-2817.05	5.526e+05
178	87	1.568e+06	-2567.86	0.18	-420.00	0.0	1.670e+05	-7831.13	14.06	-7.469e+04	-3411.52	1.568e+06
		1.086e+06	-3411.52	-6.45e-04	0.0	60.0	1.670e+05	-8251.13	14.06	-7.469e+04	-2567.86	1.086e+06
178	88	6.920e+05	-2691.58	0.07	-420.00	0.0	7.253e+04	-2554.70	10.00	-1.522e+04	-3291.67	6.920e+05
		5.261e+05	-3291.67	-2.36e-04	0.0	60.0	7.253e+04	-2974.70	10.00	-1.522e+04	-2691.58	5.261e+05
178	89	1.563e+06	-2549.88	0.18	-420.00	0.0	1.665e+05	-7811.41	13.98	-7.458e+04	-3388.95	1.563e+06
		1.082e+06	-3388.95	-6.43e-04	0.0	60.0	1.665e+05	-8231.41	13.98	-7.458e+04	-2549.88	1.082e+06
178	97	1.511e+06	-2689.51	0.17	-420.00	0.0	1.608e+05	-7423.88	14.12	-6.941e+04	-3536.72	1.511e+06
		1.053e+06	-3536.72	-6.14e-04	0.0	60.0	1.608e+05	-7843.88	14.12	-6.941e+04	-2689.51	1.053e+06
178	98	7.243e+05	-2808.06	0.07	-420.00	0.0	7.591e+04	-2682.99	10.50	-1.593e+04	-3437.88	7.243e+05
		5.507e+05	-3437.88	-2.48e-04	0.0	60.0	7.591e+04	-3102.99	10.50	-1.593e+04	-2808.06	5.507e+05
178	102	7.268e+05	-2817.05	0.07	-420.00	0.0	7.617e+04	-2692.85	10.54	-1.598e+04	-3449.17	7.268e+05
		5.526e+05	-3449.17	-2.48e-04	0.0	60.0	7.617e+04	-3112.85	10.54	-1.598e+04	-2817.05	5.526e+05
179	1	8.372e+05	-1048.60	0.11	-546.00	0.0	8.782e+04	-4343.71	40.87	-2.495e+04	-3500.95	8.372e+05
		5.602e+05	-3500.95	-3.87e-04	0.0	60.0	8.782e+04	-4889.71	40.87	-2.495e+04	-1048.60	5.602e+05
179	2	1.972e+06	2871.52	0.30	-546.00	0.0	2.160e+05	-1.272e+04	102.67	-1.187e+05	-3288.38	1.972e+06
		1.192e+06	-3288.38	-1.04e-03	0.0	60.0	2.160e+05	-1.327e+04	102.67	-1.187e+05	2871.52	1.192e+06
179	7	6.274e+05	-792.83	0.08	-420.00	0.0	6.582e+04	-3250.73	30.60	-1.870e+04	-2628.85	6.274e+05
		4.198e+05	-2628.85	-2.90e-04	0.0	60.0	6.582e+04	-3670.73	30.60	-1.870e+04	-792.83	4.198e+05
179	8	1.762e+06	3127.29	0.27	-420.00	0.0	1.940e+05	-1.163e+04	92.39	-1.124e+05	-2416.29	1.762e+06
		1.052e+06	-2416.29	-9.43e-04	0.0	60.0	1.940e+05	-1.205e+04	92.39	-1.124e+05	3127.29	1.052e+06
179	30	6.743e+05	-2700.86	0.09	-420.00	0.0	7.130e+04	-3541.40	48.89	-1.840e+04	-5546.60	6.743e+05
		4.504e+05	-5546.60	-4.49e-04	0.0	60.0	7.130e+04	-3961.40	48.89	-1.840e+04	-2700.86	4.504e+05
179	31	6.777e+05	1034.36	0.09	-420.00	0.0	7.052e+04	-3492.02	17.24	-2.189e+04	-87.51	6.777e+05
		4.545e+05	-87.51	-1.75e-04	0.0	60.0	7.052e+04	-3912.02	17.24	-2.189e+04	1034.36	4.545e+05
179	33	6.752e+05	-2702.59	0.09	-420.00	0.0	7.124e+04	-3543.03	48.87	-1.840e+04	-5548.23	6.752e+05
		4.513e+05	-5548.23	-4.49e-04	0.0	60.0	7.124e+04	-3963.03	48.87	-1.840e+04	-2702.59	4.513e+05
179	36	6.769e+05	1036.10	0.09	-420.00	0.0	7.058e+04	-3490.40	17.26	-2.189e+04	-85.88	6.769e+05
		4.536e+05	-85.88	-1.75e-04	0.0	60.0	7.058e+04	-3910.40	17.26	-2.189e+04	1036.10	4.536e+05
179	43	6.778e+05	-234.59	0.09	-420.00	0.0	7.070e+04	-3511.79	28.29	-2.064e+04	-1961.24	6.778e+05
		4.544e+05	-1961.24	-2.71e-04	0.0	60.0	7.070e+04	-3931.79	28.29	-2.064e+04	-234.59	4.544e+05
179	62	6.754e+05	-1539.59	0.09	-420.00	0.0	7.106e+04	-3526.00	39.05	-1.948e+04	-3849.51	6.754e+05
		4.516e+05	-3849.51	-3.64e-04	0.0	60.0	7.106e+04	-3946.00	39.05	-1.948e+04	-1539.59	4.516e+05
179	63	6.767e+05	-126.91	0.09	-420.00	0.0	7.076e+04	-3507.42	27.08	-2.082e+04	-1784.60	6.767e+05
		4.532e+05	-1784.60	-2.60e-04	0.0	60.0	7.076e+04	-3927.42	27.08	-2.082e+04	-126.91	4.532e+05
179	65	6.757e+05	-1540.25	0.09	-420.00	0.0	7.103e+04	-3526.63	39.04	-1.948e+04	-3850.14	6.757e+05
		4.520e+05	-3850.14	-3.64e-04	0.0	60.0	7.103e+04	-3946.63	39.04	-1.948e+04	-1540.25	4.520e+05
179	68	6.764e+05	-126.25	0.09	-420.00	0.0	7.078e+04	-3506.80	27.09	-2.082e+04	-1783.97	6.764e+05
		4.529e+05	-1783.97	-2.60e-04	0.0	60.0	7.078e+04	-3926.80	27.09	-2.082e+04	-126.25	4.529e+05
179	75	6.767e+05	-606.72	0.09	-420.00	0.0	7.083e+04	-3514.88	31.26	-2.034e+04	-2493.24	6.767e+05

Trave	Cmb	M3 mx/mn	M2 mx/mn	D 2 / D 3	Q 2 / Q 3	Pos.	N	V 2	V 3	T	M 2	M 3
		4.532e+05	-2493.24	-2.97e-04	0.0	60.0	7.083e+04	-3934.88	31.26	-2.034e+04	-606.72	4.532e+05
179	85	6.760e+05	-833.25	0.09	-420.00	0.0	7.091e+04	-3516.71	33.06	-2.015e+04	-2817.05	6.760e+05
		4.524e+05	-2817.05	-3.12e-04	0.0	60.0	7.091e+04	-3936.71	33.06	-2.015e+04	-833.25	4.524e+05
179	86	6.483e+05	-810.16	0.08	-420.00	0.0	6.800e+04	-3364.70	31.66	-1.932e+04	-2709.57	6.483e+05
		4.338e+05	-2709.57	-2.99e-04	0.0	60.0	6.800e+04	-3784.70	31.66	-1.932e+04	-810.16	4.338e+05
179	87	1.405e+06	1803.25	0.21	-420.00	0.0	1.534e+05	-8949.00	72.85	-8.181e+04	-2567.86	1.405e+06
		8.553e+05	-2567.86	-7.35e-04	0.0	60.0	1.534e+05	-9369.00	72.85	-8.181e+04	1803.25	8.553e+05
179	88	6.436e+05	-806.30	0.08	-420.00	0.0	6.752e+04	-3339.39	31.42	-1.918e+04	-2691.59	6.436e+05
		4.307e+05	-2691.59	-2.97e-04	0.0	60.0	6.752e+04	-3759.39	31.42	-1.918e+04	-806.30	4.307e+05
179	89	1.400e+06	1807.11	0.21	-420.00	0.0	1.529e+05	-8923.69	72.62	-8.168e+04	-2549.88	1.400e+06
		8.522e+05	-2549.88	-7.33e-04	0.0	60.0	1.529e+05	-9343.69	72.62	-8.168e+04	1807.11	8.522e+05
179	96	6.760e+05	-833.25	0.09	-420.00	0.0	7.091e+04	-3516.71	33.06	-2.015e+04	-2817.05	6.760e+05
		4.524e+05	-2817.05	-3.12e-04	0.0	60.0	7.091e+04	-3936.71	33.06	-2.015e+04	-833.25	4.524e+05
179	97	1.357e+06	1518.82	0.20	-420.00	0.0	1.478e+05	-8542.58	70.14	-7.639e+04	-2689.52	1.357e+06
		8.318e+05	-2689.52	-7.04e-04	0.0	60.0	1.478e+05	-8962.58	70.14	-7.639e+04	1518.82	8.318e+05
179	98	6.737e+05	-831.32	0.09	-420.00	0.0	7.067e+04	-3504.06	32.95	-2.008e+04	-2808.06	6.737e+05
		4.509e+05	-2808.06	-3.11e-04	0.0	60.0	7.067e+04	-3924.06	32.95	-2.008e+04	-831.32	4.509e+05
179	102	6.760e+05	-833.25	0.09	-420.00	0.0	7.091e+04	-3516.71	33.06	-2.015e+04	-2817.05	6.760e+05
		4.524e+05	-2817.05	-3.12e-04	0.0	60.0	7.091e+04	-3936.71	33.06	-2.015e+04	-833.25	4.524e+05
180	1	7.509e+05	4500.47	0.13	-546.00	0.0	7.968e+04	-5358.64	92.48	-2.974e+04	-1048.60	7.509e+05
		4.130e+05	-1048.60	-4.42e-04	0.0	60.0	7.968e+04	-5904.64	92.48	-2.974e+04	4500.47	4.130e+05
180	2	1.703e+06	1.777e+04	0.34	-546.00	0.0	1.942e+05	-1.425e+04	248.23	-1.262e+05	2871.52	1.703e+06
		8.315e+05	2871.52	-1.09e-03	0.0	60.0	1.942e+05	-1.479e+04	248.23	-1.262e+05	1.777e+04	8.315e+05
180	7	5.628e+05	3361.78	0.10	-420.00	0.0	5.972e+04	-4011.57	69.24	-2.228e+04	-792.84	5.628e+05
		3.095e+05	-792.84	-3.31e-04	0.0	60.0	5.972e+04	-4431.57	69.24	-2.228e+04	3361.78	3.095e+05
180	29	6.091e+05	2636.79	0.10	-420.00	0.0	6.460e+04	-4362.82	91.05	-2.229e+04	-2675.57	6.091e+05
		3.322e+05	-2675.57	-5.12e-04	0.0	60.0	6.460e+04	-4782.82	91.05	-2.229e+04	2636.79	3.322e+05
180	30	6.082e+05	2613.28	0.10	-420.00	0.0	6.466e+04	-4361.20	91.09	-2.229e+04	-2700.87	6.082e+05
		3.313e+05	-2700.87	-5.12e-04	0.0	60.0	6.466e+04	-4781.20	91.09	-2.229e+04	2613.28	3.313e+05
180	31	6.045e+05	4697.21	0.10	-420.00	0.0	6.402e+04	-4310.61	58.53	-2.576e+04	1034.36	6.045e+05
		3.359e+05	1034.36	-2.02e-04	0.0	60.0	6.402e+04	-4730.61	58.53	-2.576e+04	4697.21	3.359e+05
180	33	6.091e+05	2611.61	0.10	-420.00	0.0	6.460e+04	-4362.82	91.05	-2.229e+04	-2702.60	6.091e+05
		3.321e+05	-2702.60	-5.12e-04	0.0	60.0	6.460e+04	-4782.82	91.05	-2.229e+04	2611.61	3.321e+05
180	36	6.036e+05	4698.88	0.10	-420.00	0.0	6.408e+04	-4309.00	58.56	-2.576e+04	1036.09	6.036e+05
		3.351e+05	1036.09	-2.02e-04	0.0	60.0	6.408e+04	-4729.00	58.56	-2.576e+04	4698.88	3.351e+05
180	61	6.074e+05	3270.59	0.10	-420.00	0.0	6.444e+04	-4346.07	80.95	-2.335e+04	-1529.95	6.074e+05
		3.331e+05	-1529.95	-4.16e-04	0.0	60.0	6.444e+04	-4766.07	80.95	-2.335e+04	3270.59	3.331e+05
180	62	6.071e+05	3261.63	0.10	-420.00	0.0	6.446e+04	-4345.45	80.96	-2.335e+04	-1539.59	6.071e+05
		3.327e+05	-1539.59	-4.16e-04	0.0	60.0	6.446e+04	-4765.45	80.96	-2.335e+04	3261.63	3.327e+05
180	63	6.057e+05	4048.86	0.10	-420.00	0.0	6.422e+04	-4326.37	68.65	-2.470e+04	-126.91	6.057e+05
		3.345e+05	-126.91	-2.99e-04	0.0	60.0	6.422e+04	-4746.37	68.65	-2.470e+04	4048.86	3.345e+05
180	65	6.074e+05	3260.99	0.10	-420.00	0.0	6.444e+04	-4346.07	80.95	-2.335e+04	-1540.26	6.074e+05
		3.331e+05	-1540.26	-4.16e-04	0.0	60.0	6.444e+04	-4766.07	80.95	-2.335e+04	3260.99	3.331e+05
180	68	6.053e+05	4049.50	0.10	-420.00	0.0	6.424e+04	-4325.75	68.67	-2.470e+04	-126.25	6.053e+05
		3.342e+05	-126.25	-2.98e-04	0.0	60.0	6.424e+04	-4745.75	68.67	-2.470e+04	4049.50	3.342e+05
180	85	6.064e+05	3655.25	0.10	-420.00	0.0	6.434e+04	-4335.91	74.81	-2.402e+04	-833.25	6.064e+05
		3.336e+05	-833.25	-3.57e-04	0.0	60.0	6.434e+04	-4755.91	74.81	-2.402e+04	3655.25	3.336e+05
180	86	5.814e+05	3487.68	0.10	-420.00	0.0	6.170e+04	-4150.55	71.63	-2.303e+04	-810.17	5.814e+05
		3.198e+05	-810.17	-3.42e-04	0.0	60.0	6.170e+04	-4570.55	71.63	-2.303e+04	3487.68	3.198e+05
180	87	1.216e+06	1.233e+04	0.24	-420.00	0.0	1.380e+05	-1.008e+04	175.46	-8.732e+04	1803.25	1.216e+06
		5.988e+05	1803.25	-7.75e-04	0.0	60.0	1.380e+05	-1.050e+04	175.46	-8.732e+04	1.233e+04	5.988e+05
180	88	5.773e+05	3459.60	0.10	-420.00	0.0	6.126e+04	-4119.68	71.10	-2.286e+04	-806.31	5.773e+05
		3.175e+05	-806.31	-3.40e-04	0.0	60.0	6.126e+04	-4539.68	71.10	-2.286e+04	3459.60	3.175e+05
180	96	6.064e+05	3655.25	0.10	-420.00	0.0	6.434e+04	-4335.91	74.81	-2.402e+04	-833.25	6.064e+05
		3.336e+05	-833.25	-3.57e-04	0.0	60.0	6.434e+04	-4755.91	74.81	-2.402e+04	3655.25	3.336e+05
180	97	1.178e+06	1.161e+04	0.23	-420.00	0.0	1.330e+05	-9670.03	168.26	-8.189e+04	1518.82	1.178e+06
		5.847e+05	1518.82	-7.47e-04	0.0	60.0	1.330e+05	-1.009e+04	168.26	-8.189e+04	1.161e+04	5.847e+05
180	98	6.043e+05	3641.20	0.10	-420.00	0.0	6.412e+04	-4320.48	74.54	-2.394e+04	-831.32	6.043e+05
		3.325e+05	-831.32	-3.56e-04	0.0	60.0	6.412e+04	-4740.48	74.54	-2.394e+04	3641.20	3.325e+05
180	102	6.064e+05	3655.25	0.10	-420.00	0.0	6.434e+04	-4335.91	74.81	-2.402e+04	-833.25	6.064e+05
		3.336e+05	-833.25	-3.57e-04	0.0	60.0	6.434e+04	-4755.91	74.81	-2.402e+04	3655.25	3.336e+05
181	2	1.398e+06	4.596e+04	0.37	-546.00	0.0	1.700e+05	-1.593e+04	469.90	-1.310e+05	1.777e+04	1.398e+06
		4.263e+05	1.777e+04	-9.92e-04	0.0	60.0	1.700e+05	-1.647e+04	469.90	-1.310e+05	4.596e+04	4.263e+05
181	7	4.799e+05	1.112e+04	0.11	-420.00	0.0	5.245e+04	-4767.21	129.34	-2.536e+04	3361.77	4.799e+05
		1.812e+05	3361.77	-3.33e-04	0.0	60.0	5.245e+04	-5187.21	129.34	-2.536e+04	1.112e+04	1.812e+05
181	28	5.135e+05	1.280e+04	0.11	-420.00	0.0	5.671e+04	-5119.45	126.85	-2.909e+04	4319.01	5.135e+05
		1.971e+05	4319.01	-2.01e-04	0.0	60.0	5.671e+04	-5539.45	126.85	-2.909e+04	1.280e+04	1.971e+05
181	29	5.210e+05	1.143e+04	0.11	-420.00	0.0	5.628e+04	-5183.53	154.20	-2.564e+04	2636.78	5.210e+05
		1.939e+05	2636.78	-5.24e-04	0.0	60.0	5.628e+04	-5603.53	154.20	-2.564e+04	1.143e+04	1.939e+05
181	30	5.200e+05	1.145e+04	0.11	-420.00	0.0	5.633e+04	-5178.83	154.28	-2.566e+04	2613.27	5.200e+05
		1.932e+05	2613.27	-5.24e-04	0.0	60.0	5.633e+04	-5598.83	154.28	-2.566e+04	1.145e+04	1.932e+05
181	32	5.132e+05	1.266e+04	0.11	-420.00	0.0	5.674e+04	-5115.32	125.36	-2.908e+04	4673.70	5.132e+05
		1.972e+05	4673.70	-1.93e-04	0.0	60.0	5.674e+04	-5535.32	125.36	-2.908e+04	1.266e+04	1.972e+05
181	33	5.210e+05	1.143e+04	0.11	-420.00	0.0	5.628e+04	-5183.52	154.20	-2.564e+04	2611.60	5.210e+05
		1.939e+05	2611.60	-5.24e-04	0.0	60.0	5.628e+04	-5603.52	154.20	-2.564e+04	1.143e+04	1.939e+05

Trave	Cmb	M3 mx/mn	M2 mx/mn	D 2 / D 3	Q 2 / Q 3	Pos.	N	V 2	V 3	T	M 2	M 3
181	60	5.157e+05	1.233e+04	0.11	-420.00	0.0	5.658e+04	-5138.08	134.89	-2.803e+04	3906.01	5.157e+05
		1.961e+05	3906.01	-2.99e-04	0.0	60.0	5.658e+04	-5558.08	134.89	-2.803e+04	1.233e+04	1.961e+05
181	61	5.186e+05	1.181e+04	0.11	-420.00	0.0	5.642e+04	-5162.33	145.24	-2.669e+04	3270.59	5.186e+05
		1.949e+05	3270.59	-4.21e-04	0.0	60.0	5.642e+04	-5582.33	145.24	-2.669e+04	1.181e+04	1.949e+05
181	62	5.182e+05	1.182e+04	0.11	-420.00	0.0	5.644e+04	-5160.53	145.27	-2.670e+04	3261.62	5.182e+05
		1.947e+05	3261.62	-4.21e-04	0.0	60.0	5.644e+04	-5580.53	145.27	-2.670e+04	1.182e+04	1.947e+05
181	64	5.156e+05	1.227e+04	0.11	-420.00	0.0	5.660e+04	-5136.52	134.32	-2.803e+04	4039.89	5.156e+05
		1.962e+05	4039.89	-2.96e-04	0.0	60.0	5.660e+04	-5556.52	134.32	-2.803e+04	1.227e+04	1.962e+05
181	65	5.186e+05	1.181e+04	0.11	-420.00	0.0	5.642e+04	-5162.33	145.23	-2.669e+04	3260.98	5.186e+05
		1.949e+05	3260.98	-4.21e-04	0.0	60.0	5.642e+04	-5582.33	145.23	-2.669e+04	1.181e+04	1.949e+05
181	85	5.171e+05	1.204e+04	0.11	-420.00	0.0	5.651e+04	-5149.43	139.78	-2.736e+04	3655.24	5.171e+05
		1.955e+05	3655.24	-3.59e-04	0.0	60.0	5.651e+04	-5569.43	139.78	-2.736e+04	1.204e+04	1.955e+05
181	87	1.001e+06	3.225e+04	0.26	-420.00	0.0	1.209e+05	-1.130e+04	331.91	-9.098e+04	1.233e+04	1.001e+06
		3.103e+05	1.233e+04	-7.09e-04	0.0	60.0	1.209e+05	-1.172e+04	331.91	-9.098e+04	3.225e+04	3.103e+05
181	88	4.923e+05	1.143e+04	0.11	-420.00	0.0	5.380e+04	-4894.61	132.82	-2.603e+04	3459.59	4.923e+05
		1.860e+05	3459.59	-3.42e-04	0.0	60.0	5.380e+04	-5314.61	132.82	-2.603e+04	1.143e+04	1.860e+05
181	97	9.719e+05	3.070e+04	0.25	-420.00	0.0	1.165e+05	-1.088e+04	318.06	-8.564e+04	1.161e+04	9.719e+05
		3.062e+05	1.161e+04	-6.87e-04	0.0	60.0	1.165e+05	-1.130e+04	318.06	-8.564e+04	3.070e+04	3.062e+05
181	98	5.153e+05	1.200e+04	0.11	-420.00	0.0	5.632e+04	-5131.24	139.28	-2.726e+04	3641.20	5.153e+05
		1.949e+05	3641.20	-3.57e-04	0.0	60.0	5.632e+04	-5551.24	139.28	-2.726e+04	1.200e+04	1.949e+05
181	102	5.171e+05	1.204e+04	0.11	-420.00	0.0	5.651e+04	-5149.43	139.78	-2.736e+04	3655.24	5.171e+05
		1.955e+05	3655.24	-3.59e-04	0.0	60.0	5.651e+04	-5569.43	139.78	-2.736e+04	1.204e+04	1.955e+05
182	2	1.039e+06	8.914e+04	0.39	-546.00	0.0	1.439e+05	-1.760e+04	719.68	-1.300e+05	4.596e+04	1.039e+06
		-3.329e+04	4.596e+04	-5.86e-04	0.0	60.0	1.439e+05	-1.814e+04	719.68	-1.300e+05	8.914e+04	-3.329e+04
182	7	3.752e+05	2.300e+04	0.11	-420.00	0.0	4.416e+04	-5512.96	198.04	-2.710e+04	1.112e+04	3.752e+05
		3.187e+04	1.112e+04	-2.53e-04	0.0	60.0	4.416e+04	-5932.96	198.04	-2.710e+04	2.300e+04	3.187e+04
182	8	9.134e+05	8.140e+04	0.35	-420.00	0.0	1.291e+05	-1.575e+04	653.12	-1.209e+05	4.221e+04	9.134e+05
		-4.412e+04	4.221e+04	-5.02e-04	0.0	60.0	1.291e+05	-1.617e+04	653.12	-1.209e+05	8.140e+04	-4.412e+04
182	21	4.089e+05	2.403e+04	0.12	-420.00	0.0	4.741e+04	-5990.32	219.06	-2.747e+04	1.128e+04	4.089e+05
		3.690e+04	1.128e+04	-4.27e-04	0.0	60.0	4.741e+04	-6410.32	219.06	-2.747e+04	2.403e+04	3.690e+04
182	24	4.000e+05	2.575e+04	0.12	-420.00	0.0	4.776e+04	-5914.30	209.21	-3.100e+04	1.280e+04	4.000e+05
		3.253e+04	1.280e+04	-1.17e-04	0.0	60.0	4.776e+04	-6334.30	209.21	-3.100e+04	2.575e+04	3.253e+04
182	25	4.089e+05	2.403e+04	0.12	-420.00	0.0	4.741e+04	-5990.30	219.05	-2.747e+04	1.128e+04	4.089e+05
		3.690e+04	1.128e+04	-4.27e-04	0.0	60.0	4.741e+04	-6410.30	219.05	-2.747e+04	2.403e+04	3.690e+04
182	28	4.000e+05	2.575e+04	0.12	-420.00	0.0	4.776e+04	-5914.31	209.22	-3.100e+04	1.280e+04	4.000e+05
		3.253e+04	1.280e+04	-1.17e-04	0.0	60.0	4.776e+04	-6334.31	209.22	-3.100e+04	2.575e+04	3.253e+04
182	29	4.092e+05	2.427e+04	0.12	-420.00	0.0	4.742e+04	-5996.46	220.93	-2.746e+04	1.143e+04	4.092e+05
		3.690e+04	1.143e+04	-4.40e-04	0.0	60.0	4.742e+04	-6416.46	220.93	-2.746e+04	2.427e+04	3.690e+04
182	53	4.061e+05	2.457e+04	0.12	-420.00	0.0	4.752e+04	-5966.70	216.00	-2.854e+04	1.176e+04	4.061e+05
		3.554e+04	1.176e+04	-3.30e-04	0.0	60.0	4.752e+04	-6386.70	216.00	-2.854e+04	2.457e+04	3.554e+04
182	56	4.028e+05	2.521e+04	0.12	-420.00	0.0	4.765e+04	-5937.92	212.27	-2.992e+04	1.233e+04	4.028e+05
		3.389e+04	1.233e+04	-2.13e-04	0.0	60.0	4.765e+04	-6357.92	212.27	-2.992e+04	2.521e+04	3.389e+04
182	57	4.061e+05	2.457e+04	0.12	-420.00	0.0	4.752e+04	-5966.69	216.00	-2.854e+04	1.176e+04	4.061e+05
		3.554e+04	1.176e+04	-3.30e-04	0.0	60.0	4.752e+04	-6386.69	216.00	-2.854e+04	2.457e+04	3.554e+04
182	60	4.028e+05	2.521e+04	0.12	-420.00	0.0	4.765e+04	-5937.92	212.27	-2.992e+04	1.233e+04	4.028e+05
		3.389e+04	1.233e+04	-2.13e-04	0.0	60.0	4.765e+04	-6357.92	212.27	-2.992e+04	2.521e+04	3.389e+04
182	61	4.063e+05	2.466e+04	0.12	-420.00	0.0	4.752e+04	-5969.02	216.71	-2.854e+04	1.181e+04	4.063e+05
		3.554e+04	1.181e+04	-3.35e-04	0.0	60.0	4.752e+04	-6389.02	216.71	-2.854e+04	2.466e+04	3.554e+04
182	85	4.045e+05	2.489e+04	0.12	-420.00	0.0	4.759e+04	-5952.31	214.14	-2.923e+04	1.204e+04	4.045e+05
		3.471e+04	1.204e+04	-2.72e-04	0.0	60.0	4.759e+04	-6372.31	214.14	-2.923e+04	2.489e+04	3.471e+04
182	87	7.466e+05	6.275e+04	0.28	-420.00	0.0	1.022e+05	-1.253e+04	508.34	-9.055e+04	3.225e+04	7.466e+05
		-1.757e+04	3.225e+04	-4.27e-04	0.0	60.0	1.022e+05	-1.295e+04	508.34	-9.055e+04	6.275e+04	-1.757e+04
182	88	3.850e+05	2.363e+04	0.12	-420.00	0.0	4.530e+04	-5659.41	203.41	-2.781e+04	1.143e+04	3.850e+05
		3.282e+04	1.143e+04	-2.59e-04	0.0	60.0	4.530e+04	-6079.41	203.41	-2.781e+04	2.363e+04	3.282e+04
182	89	7.438e+05	6.256e+04	0.28	-420.00	0.0	1.019e+05	-1.248e+04	506.79	-9.035e+04	3.216e+04	7.438e+05
		-1.784e+04	3.216e+04	-4.25e-04	0.0	60.0	1.019e+05	-1.290e+04	506.79	-9.035e+04	6.256e+04	-1.784e+04
182	97	7.274e+05	5.993e+04	0.27	-420.00	0.0	9.854e+04	-1.209e+04	487.18	-8.552e+04	3.070e+04	7.274e+05
		-1.088e+04	3.070e+04	-4.21e-04	0.0	60.0	9.854e+04	-1.251e+04	487.18	-8.552e+04	5.993e+04	-1.088e+04
182	98	4.031e+05	2.480e+04	0.12	-420.00	0.0	4.742e+04	-5931.41	213.36	-2.913e+04	1.200e+04	4.031e+05
		3.458e+04	1.200e+04	-2.71e-04	0.0	60.0	4.742e+04	-6351.41	213.36	-2.913e+04	2.480e+04	3.458e+04
182	102	4.045e+05	2.489e+04	0.12	-420.00	0.0	4.759e+04	-5952.31	214.14	-2.923e+04	1.204e+04	4.045e+05
		3.471e+04	1.204e+04	-2.72e-04	0.0	60.0	4.759e+04	-6372.31	214.14	-2.923e+04	2.489e+04	3.471e+04
183	2	5.624e+05	1.302e+05	0.40	-546.00	0.0	1.183e+05	-1.883e+04	684.37	-1.130e+05	8.914e+04	5.624e+05
		-5.839e+05	8.914e+04	3.75e-04	0.0	60.0	1.183e+05	-1.938e+04	684.37	-1.130e+05	1.302e+05	-5.839e+05
183	7	2.322e+05	3.449e+04	0.12	-420.00	0.0	3.558e+04	-6160.60	191.48	-2.493e+04	2.300e+04	2.322e+05
		-1.501e+05	2.300e+04	-4.63e-05	0.0	60.0	3.558e+04	-6580.60	191.48	-2.493e+04	3.449e+04	-1.501e+05
183	21	2.557e+05	3.706e+04	0.13	-420.00	0.0	3.810e+04	-6698.95	194.13	-2.519e+04	2.403e+04	2.557e+05
		-1.588e+05	2.403e+04	-1.73e-04	0.0	60.0	3.810e+04	-7118.95	194.13	-2.519e+04	3.706e+04	-1.588e+05
183	24	2.452e+05	3.756e+04	0.13	-420.00	0.0	3.858e+04	-6602.78	219.80	-2.860e+04	2.575e+04	2.452e+05
		-1.637e+05	2.575e+04	1.24e-04	0.0	60.0	3.858e+04	-7022.78	219.80	-2.860e+04	3.756e+04	-1.637e+05
183	25	2.557e+05	3.706e+04	0.13	-420.00	0.0	3.810e+04	-6698.93	194.13	-2.519e+04	2.403e+04	2.557e+05
		-1.588e+05	2.403e+04	-1.73e-04	0.0	60.0	3.810e+04	-7118.93	194.13	-2.519e+04	3.706e+04	-1.588e+05
183	29	2.561e+05	3.698e+04	0.13	-420.00	0.0	3.812e+04	-6706.22	196.04	-2.517e+04	2.427e+04	2.561e+05
		-1.588e+05	2.427e+04	-1.89e-04	0.0	60.0	3.812e+04	-7126.22	196.04	-2.517e+04	3.698e+04	-1.588e+05
183	36	2.447e+05	3.764e+04	0.13	-420.00	0.0	3.856e+04	-6595.54	217.91	-2.861e+04	2.551e+04	2.447e+05

Trave	Cmb	M3 mx/mn	M2 mx/mn	D 2 / D 3	Q 2 / Q 3	Pos.	N	V 2	V 3	T	M 2	M 3
		-1.636e+05	2.551e+04	1.40e-04	0.0	60.0	3.856e+04	-7015.54	217.91	-2.861e+04	3.764e+04	-1.636e+05
183	53	2.524e+05	3.721e+04	0.13	-420.00	0.0	3.825e+04	-6669.06	202.12	-2.623e+04	2.457e+04	2.524e+05
		-1.603e+05	2.457e+04	-8.79e-05	0.0	60.0	3.825e+04	-7089.06	202.12	-2.623e+04	3.721e+04	-1.603e+05
183	56	2.484e+05	3.740e+04	0.13	-420.00	0.0	3.843e+04	-6632.66	211.82	-2.756e+04	2.521e+04	2.484e+05
		-1.622e+05	2.521e+04	3.18e-05	0.0	60.0	3.843e+04	-7052.66	211.82	-2.756e+04	3.740e+04	-1.622e+05
183	57	2.524e+05	3.721e+04	0.13	-420.00	0.0	3.825e+04	-6669.05	202.11	-2.623e+04	2.457e+04	2.524e+05
		-1.603e+05	2.457e+04	-8.79e-05	0.0	60.0	3.825e+04	-7089.05	202.11	-2.623e+04	3.721e+04	-1.603e+05
183	61	2.526e+05	3.718e+04	0.13	-420.00	0.0	3.826e+04	-6671.81	202.84	-2.622e+04	2.466e+04	2.526e+05
		-1.603e+05	2.466e+04	-9.28e-05	0.0	60.0	3.826e+04	-7091.81	202.84	-2.622e+04	3.718e+04	-1.603e+05
183	68	2.483e+05	3.743e+04	0.13	-420.00	0.0	3.843e+04	-6629.93	211.11	-2.756e+04	2.513e+04	2.483e+05
		-1.621e+05	2.513e+04	3.79e-05	0.0	60.0	3.843e+04	-7049.93	211.11	-2.756e+04	3.743e+04	-1.621e+05
183	85	2.504e+05	3.731e+04	0.13	-420.00	0.0	3.834e+04	-6650.86	206.97	-2.689e+04	2.489e+04	2.504e+05
		-1.612e+05	2.489e+04	-4.90e-05	0.0	60.0	3.834e+04	-7070.86	206.97	-2.689e+04	3.731e+04	-1.612e+05
183	87	4.083e+05	9.178e+04	0.28	-420.00	0.0	8.399e+04	-1.344e+04	483.84	-7.892e+04	6.275e+04	4.083e+05
		-4.107e+05	6.275e+04	2.47e-04	0.0	60.0	8.399e+04	-1.386e+04	483.84	-7.892e+04	9.178e+04	-4.107e+05
183	88	2.383e+05	3.543e+04	0.12	-420.00	0.0	3.650e+04	-6324.02	196.64	-2.558e+04	2.363e+04	2.383e+05
		-1.538e+05	2.363e+04	-4.72e-05	0.0	60.0	3.650e+04	-6744.02	196.64	-2.558e+04	3.543e+04	-1.538e+05
183	97	4.019e+05	8.778e+04	0.27	-420.00	0.0	8.085e+04	-1.301e+04	464.11	-7.473e+04	5.993e+04	4.019e+05
		-3.915e+05	5.993e+04	2.20e-04	0.0	60.0	8.085e+04	-1.343e+04	464.11	-7.473e+04	8.778e+04	-3.915e+05
183	98	2.496e+05	3.717e+04	0.13	-420.00	0.0	3.821e+04	-6627.54	206.23	-2.680e+04	2.480e+04	2.496e+05
		-1.607e+05	2.480e+04	-4.89e-05	0.0	60.0	3.821e+04	-7047.54	206.23	-2.680e+04	3.717e+04	-1.607e+05
183	102	2.504e+05	3.731e+04	0.13	-420.00	0.0	3.834e+04	-6650.86	206.97	-2.689e+04	2.489e+04	2.504e+05
		-1.612e+05	2.489e+04	-4.90e-05	0.0	60.0	3.834e+04	-7070.86	206.97	-2.689e+04	3.731e+04	-1.612e+05
184	2	-2.760e+05	1.302e+05	0.39	-546.00	0.0	1.058e+05	-2.377e+04	-2170.04	-1.019e+04	1.302e+05	-2.760e+05
		-1.719e+06	-0.06	2.70e-03	0.0	60.0	1.058e+05	-2.432e+04	-2170.04	-1.019e+04	-0.06	-1.719e+06
184	7	-1.851e+04	3.449e+04	0.12	-420.00	0.0	3.011e+04	-7776.91	-574.89	-268.18	3.449e+04	-1.851e+04
		-4.977e+05	-0.01	5.71e-04	0.0	60.0	3.011e+04	-8196.91	-574.89	-268.18	-0.01	-4.977e+05
184	19	-1.845e+04	3.450e+04	0.12	-420.00	0.0	3.012e+04	-7778.65	-575.08	-258.85	3.450e+04	-1.845e+04
		-4.978e+05	-0.01	5.71e-04	0.0	60.0	3.012e+04	-8198.65	-575.08	-258.85	-0.01	-4.978e+05
184	24	-2.619e+04	3.756e+04	0.12	-420.00	0.0	3.286e+04	-8458.12	-626.00	-1375.01	3.756e+04	-2.619e+04
		-5.413e+05	-0.02	7.71e-04	0.0	60.0	3.286e+04	-8878.12	-626.00	-1375.01	-0.02	-5.413e+05
184	29	-1.197e+04	3.698e+04	0.12	-420.00	0.0	3.204e+04	-8346.91	-616.30	880.04	3.698e+04	-1.197e+04
		-5.312e+05	-0.01	4.50e-04	0.0	60.0	3.204e+04	-8766.91	-616.30	880.04	-0.01	-5.312e+05
184	32	-2.673e+04	3.764e+04	0.12	-420.00	0.0	3.286e+04	-8464.08	-627.31	-1399.41	3.764e+04	-2.673e+04
		-5.413e+05	-0.02	7.88e-04	0.0	60.0	3.286e+04	-8884.08	-627.31	-1399.41	-0.02	-5.413e+05
184	36	-2.673e+04	3.764e+04	0.12	-420.00	0.0	3.286e+04	-8464.02	-627.32	-1400.69	3.764e+04	-2.673e+04
		-5.413e+05	-0.02	7.88e-04	0.0	60.0	3.286e+04	-8884.02	-627.32	-1400.69	-0.02	-5.413e+05
184	56	-2.194e+04	3.740e+04	0.12	-420.00	0.0	3.261e+04	-8425.52	-623.40	-693.43	3.740e+04	-2.194e+04
		-5.382e+05	-0.01	6.76e-04	0.0	60.0	3.261e+04	-8845.52	-623.40	-693.43	-0.01	-5.382e+05
184	61	-1.656e+04	3.718e+04	0.12	-420.00	0.0	3.229e+04	-8383.22	-619.72	183.05	3.718e+04	-1.656e+04
		-5.344e+05	-0.01	5.55e-04	0.0	60.0	3.229e+04	-8803.22	-619.72	183.05	-0.01	-5.344e+05
184	64	-2.214e+04	3.743e+04	0.12	-420.00	0.0	3.261e+04	-8427.76	-623.89	-702.42	3.743e+04	-2.214e+04
		-5.382e+05	-0.01	6.83e-04	0.0	60.0	3.261e+04	-8847.76	-623.89	-702.42	-0.01	-5.382e+05
184	68	-2.214e+04	3.743e+04	0.12	-420.00	0.0	3.261e+04	-8427.74	-623.89	-702.91	3.743e+04	-2.214e+04
		-5.382e+05	-0.01	6.83e-04	0.0	60.0	3.261e+04	-8847.74	-623.89	-702.91	-0.01	-5.382e+05
184	85	-1.935e+04	3.731e+04	0.12	-420.00	0.0	3.245e+04	-8405.49	-621.81	-259.69	3.731e+04	-1.935e+04
		-5.363e+05	-0.01	6.19e-04	0.0	60.0	3.245e+04	-8825.49	-621.81	-259.69	-0.01	-5.363e+05
184	87	-1.866e+05	9.178e+04	0.27	-420.00	0.0	7.483e+04	-1.697e+04	-1529.60	-6828.14	9.178e+04	-1.866e+05
		-1.217e+06	-0.04	1.88e-03	0.0	60.0	7.483e+04	-1.739e+04	-1529.60	-6828.14	-0.04	-1.217e+06
184	88	-1.879e+04	3.543e+04	0.12	-420.00	0.0	3.089e+04	-7986.44	-590.53	-265.35	3.543e+04	-1.879e+04
		-5.106e+05	-0.01	5.87e-04	0.0	60.0	3.089e+04	-8406.44	-590.53	-265.35	-0.01	-5.106e+05
184	94	-1.875e+04	3.544e+04	0.12	-420.00	0.0	3.089e+04	-7987.60	-590.66	-259.13	3.544e+04	-1.875e+04
		-5.106e+05	-0.01	5.87e-04	0.0	60.0	3.089e+04	-8407.60	-590.66	-259.13	-0.01	-5.106e+05
184	97	-1.703e+05	8.778e+04	0.26	-420.00	0.0	7.179e+04	-1.643e+04	-1462.92	-6168.12	8.778e+04	-1.703e+05
		-1.169e+06	-0.04	1.78e-03	0.0	60.0	7.179e+04	-1.685e+04	-1462.92	-6168.12	-0.04	-1.169e+06
184	98	-1.932e+04	3.717e+04	0.12	-420.00	0.0	3.234e+04	-8375.43	-619.56	-260.76	3.717e+04	-1.932e+04
		-5.344e+05	-0.01	6.17e-04	0.0	60.0	3.234e+04	-8795.43	-619.56	-260.76	-0.01	-5.344e+05
184	101	-1.929e+04	3.718e+04	0.12	-420.00	0.0	3.234e+04	-8376.01	-619.62	-257.65	3.718e+04	-1.929e+04
		-5.345e+05	-0.01	6.17e-04	0.0	60.0	3.234e+04	-8796.01	-619.62	-257.65	-0.01	-5.345e+05
184	102	-1.935e+04	3.731e+04	0.12	-420.00	0.0	3.245e+04	-8405.49	-621.81	-259.69	3.731e+04	-1.935e+04
		-5.363e+05	-0.01	6.19e-04	0.0	60.0	3.245e+04	-8825.49	-621.81	-259.69	-0.01	-5.363e+05
Trave		**M3 mx/mn**	**M2 mx/mn**	**D 2 / D 3**	**Q 2 / Q 3**		**N**	**V 2**	**V 3**	**T**		
		-1.719e+06	-1.302e+05	-0.44	-546.00		2.980e+04	-2.432e+04	-2170.04	-1.468e+05		
		2.865e+06	1.302e+05	0.40	0.0		2.932e+05	2.848e+04	2169.85	1.504e+05		

24 RISULTATI ELEMENTI TIPO SHELL

24.1 LEGENDA RISULTATI ELEMENTI TIPO SHELL

Il controllo dei risultati delle analisi condotte, per quanto concerne gli elementi tipo shell, è possibile in relazione alle tabelle sottoriportate.
Per ogni elemento, e per ogni combinazione(o caso di carico) vengono riportati i risultati più significativi.

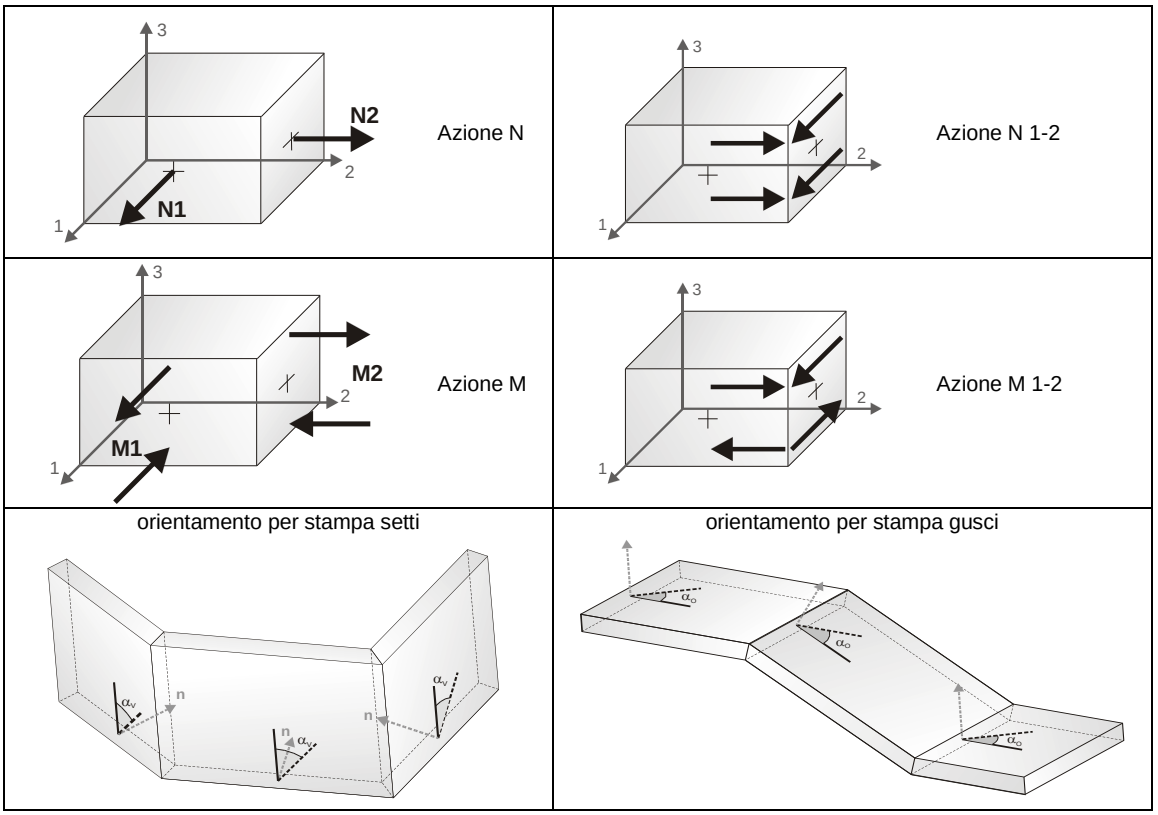

In particolare vengono riportati in ogni nodo di un elemento per ogni combinazione:

tensione di Von Mises		(valore riassuntivo del complessivo stato di sollecitazione)
N max		sforzo membranale principale massimo
N min		sforzo membranale principale minimo
M max		sforzo flessionale principale massimo
M min		sforzo flessionale principale minimo
N1 **N1-2** **M2**	**N2** **M1** **M1-2**	sforzi membranali e flessionali in direzione locale 1 e 2 dell'elemento (lo sforzo 2-1 è uguale allo sforzo 1-2 per la reciprocità delle tensioni tangenziali)

I suddetti risultati possono a scelta del progettista essere preceduti o sostituiti da valori di sollecitazione non più riferiti al sistema locale dell'elemento ma al sistema globale.
In questo caso gli elementi vengono raggruppati in gruppi (M_S: macro gusci o macro setti, raggruppati per materiale, spessore, e posizione fisica) per la valutazione dei valori mediati ai nodi appartenenti agli elementi dei gruppi stessi.
I valori di sollecitazione sono, in questo caso, riferiti ad una terna specifica del gruppo ruotata di α_O attorno all'asse Z per i gusci e ruotata di α_V attorno alla normale (che per definizione è orizzontale) al piano del setto.
Per i setti, in particolare, se α_V è zero, l'asse '1-1 rappresenta la verticale e l'asse '2-2 l'orizzontale contenuta nel setto.

Le azioni sui setti possono essere espresse anche con formato macro, cioè riferite all'intero macroelemento.
In particolare vengono riportati per ogni quota Z dei nodi e per ogni combinazione i seguenti valori:

N memb.	Azione membranale complessiva agente sulla parete in direzione Z
V memb.	Azione complessiva di taglio agente nel piano del macroelemento
V orto	Azione complessiva di taglio agente in direzione perpendicolare al macroelemento
M memb.	Azione flessionale complessiva agente nel piano del macroelemento
M orto	Azione flessionale complessiva agente in direzione perpendicolare al macroelemento
T	Azione torsionale complessiva agente nel piano orizzontale

Macro	Tipo	Angolo 1-X (gradi)
1	**Guscio**	**0.0**

M_G	Cmb	Nodo	N max	N min	N 1	N 2	N 1-2	M max	M min	M 1	M 2	M 1-2
			daN/cm	daN/cm	daN/cm	daN/cm	daN/cm	daN	daN	daN	daN	daN
1	2	43	1801.85	483.23	488.18	1796.90	-80.62	1478.80	760.69	763.15	1476.35	-41.90
1	2	44	826.02	157.28	157.58	825.72	-14.20	710.81	-76.84	-76.00	709.97	25.75
1	2	45	681.09	-192.83	-192.58	680.84	-14.54	1247.16	638.82	759.35	1126.63	242.48
1	2	46	811.22	106.57	108.39	809.40	-35.81	1099.98	271.86	311.01	1060.83	175.74
1	2	47	491.15	-22.15	-20.97	489.97	24.58	343.06	-572.81	217.67	-447.42	314.83
1	2	48	556.48	31.29	31.91	555.86	18.05	237.42	-461.52	197.92	-422.01	161.41
1	2	49	276.24	-23.38	-18.90	271.76	-36.38	391.34	-1007.83	227.26	-843.75	-450.18
1	2	50	338.29	28.71	32.70	334.29	-34.93	308.72	-862.25	234.17	-787.69	-285.91
1	2	51	4.99	-892.16	4.15	-891.33	27.42	55.00	-3597.89	42.58	-3585.47	212.68
1	2	52	-1.80	-913.07	-2.85	-912.02	30.99	37.28	-3587.69	32.63	-3583.04	129.69
1	2	53	17.74	-1351.61	17.55	-1351.42	-16.40	-249.43	-4885.22	-252.47	-4882.18	-118.55
1	2	54	-19.22	-1361.47	-19.53	-1361.17	-20.28	-401.59	-4743.55	-403.00	-4742.14	-78.23
1	2	55	183.52	-12.52	-3.95	174.96	40.08	233.55	-1326.37	178.68	-1271.49	287.38
1	2	56	217.98	-3.20	3.38	211.39	37.58	182.55	-1247.37	169.42	-1234.24	136.39
1	2	57	8.12	-835.47	6.28	-833.63	-39.36	-50.03	-3507.38	-74.18	-3483.23	-287.95
1	2	58	-13.99	-837.57	-16.67	-834.89	-46.87	-8.31	-3401.85	-25.75	-3384.41	-242.65
1	2	59	14.66	-1466.65	14.63	-1466.62	6.86	-234.09	-5102.14	-235.11	-5101.12	70.51
1	2	60	-13.64	-1483.66	-13.69	-1483.62	7.96	-347.90	-4996.77	-352.09	-4992.59	139.49
1	2	61	4.98	-1086.11	4.42	-1085.56	24.54	7.09	-4012.90	-2.76	-4003.04	198.79
1	2	62	-1.70	-1110.95	-2.46	-1110.20	28.92	9.34	-3998.00	3.89	-3992.55	147.67
1	2	63	11.14	-143.07	0.65	-132.58	38.82	170.64	-1989.76	139.64	-1958.76	256.95
1	2	64	6.43	-130.97	-6.68	-117.87	40.36	135.67	-1939.28	128.53	-1932.14	121.49
1	2	65	735.34	164.56	164.62	735.27	6.18	713.23	-173.54	-173.51	713.20	-5.31
1	2	66	1551.50	400.15	404.86	1546.79	73.50	1620.81	1141.07	1154.86	1607.02	80.17
1	2	67	539.19	-172.68	-172.66	539.18	3.49	1245.90	476.54	849.97	872.47	-384.52
1	2	68	665.22	108.67	109.41	664.47	20.37	940.55	138.31	287.47	791.38	-312.12
1	2	69	14.03	-1135.30	13.32	-1134.59	-28.58	-203.84	-4388.07	-214.65	-4377.25	-212.45
1	2	70	-17.82	-1143.29	-18.85	-1142.25	-34.17	-264.21	-4256.47	-272.99	-4247.69	-187.03
1	2	71	5.47	-417.29	2.63	-414.45	34.58	129.70	-2587.25	108.88	-2566.43	236.95
1	2	72	-4.12	-419.30	-7.52	-415.91	37.41	94.58	-2558.76	89.54	-2553.73	115.47
1	2	73	5.53	-1251.17	5.18	-1250.83	20.90	-50.47	-4372.28	-57.65	-4365.10	175.96
1	2	74	-4.43	-1275.32	-4.95	-1274.80	25.76	-41.84	-4342.25	-48.49	-4335.60	169.07
1	2	75	17.97	-1462.36	17.96	-1462.35	-4.00	-258.83	-5123.81	-258.91	-5123.73	-19.76
1	2	76	-17.73	-1474.82	-17.74	-1474.81	-4.27	-429.08	-4990.58	-429.36	-4990.30	35.74
1	2	77	16.62	-130.41	-3.81	-109.98	-50.86	193.83	-1904.27	113.75	-1824.19	-402.00
1	2	78	30.29	-106.30	2.62	-78.62	-54.90	246.82	-1777.00	213.09	-1743.28	-259.07
1	2	79	5.04	-669.00	3.65	-667.61	30.61	94.15	-3123.09	78.52	-3107.46	223.70
1	2	80	-3.46	-682.28	-5.15	-680.60	33.75	62.49	-3108.18	58.06	-3103.74	118.51
1	2	81	5.53	-489.20	0.88	-484.56	-47.71	53.48	-2723.70	9.61	-2679.83	-346.29
1	2	82	-4.18	-480.49	-10.93	-473.74	-56.30	152.10	-2615.27	129.50	-2592.67	-249.08
1	2	83	8.92	-1384.70	8.76	-1384.54	15.21	-108.84	-4691.78	-112.92	-4687.70	136.64
1	2	84	-9.00	-1405.47	-9.23	-1405.23	18.00	-149.24	-4634.73	-156.75	-4627.22	183.40
1	2	106	835.12	163.94	163.94	835.12	0.16	718.67	42.26	42.29	718.64	-3.87
1	2	107	786.86	127.76	127.76	786.86	0.45	1039.72	271.17	271.51	1039.38	-16.17
1	2	108	548.75	59.08	59.08	548.75	0.39	111.79	-437.44	111.39	-437.04	-14.83
1	2	109	325.23	61.36	61.36	325.23	0.24	237.05	-792.68	237.02	-792.65	5.47
1	2	110	-3.67	-918.81	-3.67	-918.81	0.30	104.66	-3590.82	104.66	-3590.82	1.47
1	2	111	-41.74	-1334.97	-41.74	-1334.97	0.31	1365.92	-4236.22	1365.92	-4236.21	4.44
1	2	112	219.16	11.45	11.45	219.16	0.29	95.45	-1240.73	95.36	-1240.63	-11.28
1	2	113	-21.61	-830.23	-21.61	-830.23	0.32	816.40	-3254.41	816.40	-3254.40	4.98
1	2	114	-28.00	-1470.36	-28.00	-1470.36	0.30	1090.84	-4564.98	1090.84	-4564.98	3.89
1	2	115	-0.98	-1121.48	-0.98	-1121.48	0.31	193.55	-3991.66	193.55	-3991.66	2.42
1	2	116	-7.62	-110.18	-7.62	-110.18	0.13	84.98	-1935.14	84.96	-1935.13	-6.02
1	2	117	739.02	179.56	179.56	739.02	0.24	732.46	-44.31	-44.31	732.46	0.79
1	2	118	642.21	131.98	131.98	642.20	0.17	770.36	283.53	283.59	770.30	5.47
1	2	119	-35.25	-1123.93	-35.25	-1123.93	0.31	1182.88	-3809.29	1182.87	-3809.28	4.71
1	2	120	-10.88	-412.66	-10.88	-412.66	0.13	72.03	-2558.95	72.02	-2558.95	-2.04
1	2	121	-2.13	-1288.08	-2.13	-1288.08	0.31	372.04	-4305.20	372.04	-4305.19	3.07
1	2	122	-39.18	-1450.18	-39.18	-1450.18	0.30	1333.97	-4488.00	1333.97	-4487.99	4.18
1	2	123	14.06	-76.84	14.06	-76.84	0.29	353.35	-1726.76	353.34	-1726.75	5.42
1	2	124	-7.86	-682.45	-7.86	-682.45	0.25	72.30	-3111.70	72.30	-3111.70	7.52e-02
1	2	125	-7.57	-473.65	-7.57	-473.65	0.32	537.19	-2541.96	537.18	-2541.95	5.23
1	2	126	-11.87	-1409.89	-11.87	-1409.89	0.31	676.59	-4514.42	676.59	-4514.41	3.54
1	2	148	826.70	157.18	157.47	826.41	13.93	714.79	-77.02	-75.63	713.41	-33.10
1	2	149	811.74	106.35	108.29	809.80	37.00	1111.51	252.33	304.14	1059.70	-204.53
1	2	150	555.04	31.12	31.70	554.46	-17.45	235.51	-483.42	182.86	-430.76	-187.30
1	2	151	338.67	28.51	32.60	334.59	35.36	317.05	-867.56	236.82	-787.33	297.66
1	2	152	-1.85	-914.03	-2.88	-913.00	-30.55	21.39	-3594.69	16.83	-3590.12	-128.38

M_G	Cmb	Nodo	N max	N min	N 1	N 2	N 1-2	M max	M min	M 1	M 2	M 1-2
1	2	153	-19.20	-1361.23	-19.52	-1360.91	20.77	-404.75	-4745.43	-406.46	-4743.72	86.15
1	2	154	214.72	-3.11	3.45	208.16	-37.22	162.39	-1271.20	145.12	-1253.94	-156.39
1	2	155	-13.93	-837.46	-16.66	-834.72	47.37	-7.20	-3404.13	-25.96	-3385.38	251.71
1	2	156	-13.66	-1483.43	-13.70	-1483.40	-7.48	-355.10	-4998.87	-358.89	-4995.07	-132.75
1	2	157	-1.77	-1111.39	-2.50	-1110.66	-28.44	-3.94	-4003.14	-9.16	-3997.93	-144.26
1	2	158	6.14	-134.17	-6.50	-121.53	-40.17	110.15	-1961.83	101.49	-1953.17	-133.68
1	2	159	735.84	164.77	164.83	735.78	-5.60	712.53	-178.26	-178.22	712.48	6.64
1	2	160	665.63	108.69	109.42	664.90	-20.22	951.63	128.63	288.03	792.23	325.24
1	2	161	-17.77	-1143.10	-18.84	-1142.03	34.66	-265.24	-4258.55	-274.83	-4248.96	195.49
1	2	162	-4.07	-422.05	-7.41	-418.72	-37.19	72.24	-2572.15	66.67	-2566.57	-121.29
1	2	163	-4.49	-1275.43	-4.99	-1274.92	-25.27	-52.90	-4346.00	-59.19	-4339.72	-164.17
1	2	164	-17.73	-1474.56	-17.74	-1474.54	4.76	-434.28	-4992.45	-434.45	-4992.27	-28.38
1	2	165	30.68	-106.58	2.56	-78.46	55.40	252.06	-1779.89	215.61	-1743.44	269.71
1	2	166	-3.49	-683.99	-5.13	-682.35	-33.38	43.57	-3117.72	38.99	-3113.14	-120.18
1	2	167	-4.07	-480.48	-10.94	-473.61	56.81	155.21	-2617.66	130.83	-2593.28	258.86
1	2	168	-9.04	-1405.36	-9.26	-1405.14	-17.51	-158.35	-4637.44	-165.39	-4630.40	-177.45
1	2	190	1811.48	487.18	492.05	1806.61	80.16	1488.41	778.83	782.14	1485.10	48.32
1	2	191	680.90	-195.07	-194.82	680.66	14.64	1270.36	625.87	766.14	1130.10	-265.94
1	2	192	487.85	-22.43	-21.23	486.65	-24.75	357.92	-598.99	218.44	-459.51	-337.66
1	2	193	276.47	-23.44	-18.90	271.93	36.63	404.34	-1014.42	234.44	-844.52	460.63
1	2	194	4.94	-894.28	4.11	-893.45	-27.29	42.96	-3608.15	30.48	-3595.67	-213.12
1	2	195	17.73	-1351.10	17.53	-1350.89	16.58	-252.31	-4887.93	-255.71	-4884.54	125.40
1	2	196	178.32	-12.45	-3.65	169.51	-40.03	231.23	-1356.98	170.84	-1296.59	-303.76
1	2	197	8.13	-835.12	6.27	-833.26	39.53	-49.38	-3510.65	-74.87	-3485.17	295.90
1	2	198	14.62	-1466.30	14.59	-1466.27	-6.69	-240.02	-5105.43	-240.89	-5104.57	-65.00
1	2	199	4.91	-1087.22	4.37	-1086.67	-24.38	-3.62	-4020.43	-13.31	-4010.74	-197.07
1	2	200	11.04	-148.65	1.01	-138.61	-38.75	160.33	-2019.15	126.81	-1985.63	-268.21
1	2	201	1552.55	400.38	405.11	1547.82	-73.62	1627.63	1169.75	1186.14	1611.24	-85.05
1	2	202	539.55	-172.84	-172.82	539.53	-3.34	1265.11	475.13	865.00	875.23	394.96
1	2	203	14.03	-1134.84	13.31	-1134.12	28.75	-205.11	-4390.93	-216.69	-4379.35	219.85
1	2	204	5.59	-422.25	2.79	-419.46	-34.49	118.04	-2606.21	96.05	-2584.22	-243.77
1	2	205	5.47	-1251.57	5.13	-1251.23	-20.73	-59.60	-4377.82	-66.51	-4370.91	-172.62
1	2	206	17.94	-1461.87	17.93	-1461.86	4.17	-263.23	-5126.65	-263.37	-5126.51	26.00
1	2	207	16.80	-130.43	-3.81	-109.82	51.08	200.73	-1909.24	117.19	-1825.70	411.46
1	2	208	5.04	-672.45	3.66	-671.08	-30.50	81.50	-3136.99	65.41	-3120.91	-226.96
1	2	209	5.57	-488.99	0.88	-484.30	47.91	56.61	-2727.62	10.62	-2681.62	354.89
1	2	210	8.87	-1384.63	8.71	-1384.47	-15.03	-116.35	-4695.93	-120.16	-4692.12	-132.06
1	2	211	49.04	-1212.39	-151.67	-1011.68	-461.41	56.22	-325.56	-10.10	-259.24	-144.64
1	2	212	852.17	-0.20	41.80	810.17	184.49	1128.46	-137.16	-117.80	1109.10	155.34
1	2	213	-6.13	-1478.09	-6.17	-1478.05	7.59	29.10	-4997.19	29.06	-4997.15	13.50
1	2	214	466.30	37.04	42.00	461.33	45.90	70.29	-515.46	58.22	-503.38	83.24
1	2	215	248.89	31.96	39.04	241.81	-38.54	69.70	-918.50	57.32	-906.12	-109.92
1	2	216	149.30	11.72	12.51	148.51	10.37	8.70	-1313.58	3.24	-1308.13	84.77
1	2	217	-7.15	-1479.52	-7.16	-1479.52	3.10	20.32	-5016.17	20.31	-5016.16	-6.52
1	2	218	1.46	-147.62	1.36	-147.52	3.90	6.48	-1978.22	3.20	-1974.93	80.66
1	2	219	-7.09	-1369.13	-7.09	-1369.13	1.04	20.12	-4776.80	19.92	-4776.60	-30.89
1	2	220	-1.54	-420.98	-1.56	-420.96	2.63	7.42	-2573.99	5.13	-2571.70	76.82
1	2	221	-5.88	-1148.45	-5.89	-1148.44	-3.55	28.34	-4280.50	27.73	-4279.89	-51.30
1	2	222	-2.22	-669.13	-2.23	-669.12	2.28	8.09	-3107.25	6.36	-3105.52	73.37
1	2	223	700.44	-2.41	39.40	658.63	-166.25	880.46	-129.50	-98.33	849.29	-174.67
1	2	224	-2.44	-889.94	-2.45	-889.93	2.16	8.45	-3579.03	7.12	-3577.70	69.09
1	2	225	-4.29	-841.97	-4.31	-841.95	-3.87	-2.22	-3471.11	-3.72	-3469.60	-72.30
1	2	226	-2.80	-1082.48	-2.81	-1082.47	2.26	8.55	-3990.68	7.57	-3989.70	62.59
1	2	227	-0.27	-496.12	-0.27	-496.12	-0.69	5.76	-2688.31	2.53	-2685.08	-93.27
1	2	228	-3.89	-1247.26	-3.90	-1247.25	3.26	8.13	-4346.05	7.51	-4345.43	51.98
1	2	229	11.40	-134.57	11.18	-134.34	-5.69	8.35	-1864.17	2.24	-1858.06	-106.79
1	2	230	-5.19	-1386.17	-5.23	-1386.13	7.60	-0.74	-4660.94	-0.98	-4660.70	33.37
1	2	231	76.33	-1046.25	-124.79	-845.13	430.49	-18.73	-369.22	-63.14	-324.81	116.58
1	2	232	852.96	-1.11	41.85	809.99	-186.68	1137.81	-139.34	-118.24	1116.71	-162.78
1	2	233	47.05	-1221.56	-152.03	-1022.48	461.43	40.44	-315.50	-9.22	-265.83	123.33
1	2	234	462.43	37.15	42.18	457.40	-45.99	72.20	-534.49	58.44	-520.73	-90.34
1	2	235	142.58	11.64	12.49	141.73	-10.49	9.41	-1337.86	3.33	-1331.79	-90.26
1	2	236	1.40	-155.03	1.31	-154.94	-3.75	7.16	-2002.73	3.55	-1999.12	-85.11
1	2	237	-1.60	-426.99	-1.61	-426.98	-2.47	7.14	-2591.01	4.67	-2588.55	-80.02
1	2	238	-2.25	-673.24	-2.25	-673.23	-2.26	8.06	-3119.72	6.25	-3117.91	-75.23
1	2	239	-2.43	-892.47	-2.44	-892.47	-2.17	8.43	-3588.19	7.08	-3586.83	-69.82
1	2	240	-2.79	-1083.81	-2.79	-1083.81	-2.27	8.54	-3997.37	7.57	-3996.40	-62.33
1	2	241	-3.88	-1247.73	-3.89	-1247.73	-3.27	8.14	-4350.94	7.54	-4350.35	-50.91
1	2	242	-5.18	-1386.07	-5.22	-1386.03	-7.61	-0.73	-4664.58	-0.94	-4664.37	-31.64
1	2	243	-6.11	-1477.65	-6.15	-1477.61	-7.60	29.12	-5000.02	29.10	-4999.99	-11.23
1	2	244	-7.14	-1478.91	-7.15	-1478.90	-3.11	20.35	-5018.50	20.33	-5018.49	9.21
1	2	245	-7.08	-1368.48	-7.08	-1368.48	-1.04	20.16	-4778.90	19.92	-4778.66	33.90
1	2	246	-5.88	-1147.85	-5.89	-1147.84	3.55	28.40	-4282.56	27.71	-4281.87	54.56
1	2	247	-4.29	-841.50	-4.31	-841.48	3.87	-2.14	-3473.30	-3.79	-3471.65	75.73
1	2	248	-0.27	-495.80	-0.27	-495.80	0.68	5.89	-2690.76	2.41	-2687.29	96.79

M_G	Cmb	Nodo	N max	N min	N 1	N 2	N 1-2	M max	M min	M 1	M 2	M 1-2
1	2	249	11.40	-134.43	11.18	-134.20	5.69	8.61	-1866.92	2.10	-1860.40	110.34
1	2	250	248.91	31.97	39.06	241.82	38.56	70.55	-921.34	57.42	-908.20	113.37
1	2	251	700.60	-2.48	39.41	658.70	166.43	882.65	-130.33	-98.02	850.34	178.01
1	2	252	76.48	-1046.93	-124.85	-845.61	-430.86	-21.08	-365.36	-63.63	-322.81	-113.30
1	30	43	509.35	130.52	131.79	508.09	-21.83	500.49	241.20	241.22	500.48	2.08
1	30	44	235.12	44.61	44.91	234.82	-7.50	240.09	-8.70	-7.40	238.79	17.93
1	30	45	184.18	-55.56	-55.44	184.05	-5.46	310.53	177.06	219.69	267.89	62.23
1	30	46	215.81	28.88	30.08	214.61	-14.89	252.19	60.99	71.72	241.46	44.01
1	30	47	103.63	-5.65	-5.33	103.31	5.94	77.65	-273.36	56.23	-251.95	84.01
1	30	48	117.37	8.27	8.28	117.36	1.16	22.71	-257.68	16.82	-251.79	40.21
1	30	49	103.59	-5.63	-5.27	103.23	-6.25	76.67	-274.74	54.36	-252.44	-85.68
1	30	50	117.09	8.35	8.39	117.05	-1.91	20.22	-258.60	14.62	-253.00	-39.13
1	30	51	2.21	-327.76	2.16	-327.71	4.05	12.15	-1226.33	11.40	-1225.58	30.51
1	30	52	-2.95	-330.49	-2.99	-330.46	3.37	-92.39	-1232.65	-92.52	-1232.52	12.20
1	30	53	2.27	-327.98	2.22	-327.93	-3.92	12.14	-1227.51	11.36	-1226.73	-31.05
1	30	54	-2.92	-330.93	-2.95	-330.91	-3.10	-93.10	-1233.92	-93.24	-1233.78	-12.47
1	30	55	6.82	-14.89	-0.25	-7.82	10.17	53.96	-542.77	44.69	-533.50	73.78
1	30	56	6.54	-7.20	-9.33e-02	-0.56	6.87	-6.60	-531.39	-8.50	-529.49	31.57
1	30	57	2.07	-199.40	1.78	-199.12	-7.57	24.75	-957.81	22.14	-955.20	-50.60
1	30	58	-3.67	-199.85	-3.88	-199.64	-6.48	-59.79	-956.94	-60.25	-956.48	-20.35
1	30	59	2.34	-393.49	2.33	-393.49	-1.07	5.38	-1364.85	5.29	-1364.77	-10.86
1	30	60	-2.25	-396.57	-2.25	-396.57	-0.65	-109.54	-1373.20	-109.56	-1373.18	-4.52
1	30	61	2.28	-368.69	2.26	-368.67	2.63	8.01	-1312.30	7.69	-1311.98	20.59
1	30	62	-2.52	-371.66	-2.53	-371.65	2.19	-102.96	-1320.02	-103.02	-1319.97	8.33
1	30	63	1.91	-111.33	1.14	-110.55	9.32	35.77	-767.99	31.13	-763.35	60.90
1	30	64	-2.80	-108.52	-3.34	-107.99	7.51	-35.37	-762.01	-36.24	-761.14	25.16
1	30	65	235.01	44.42	44.66	234.78	6.69	240.15	-4.61	-3.99	239.53	-12.32
1	30	66	509.08	130.38	131.58	507.89	21.22	496.58	215.86	215.86	496.58	-0.39
1	30	67	183.94	-55.60	-55.50	183.83	5.06	308.35	167.50	208.66	267.19	-64.06
1	30	68	215.53	29.00	30.05	214.48	13.94	250.57	61.31	71.10	240.79	-41.91
1	30	69	2.18	-271.21	2.07	-271.09	-5.68	17.57	-1108.84	16.10	-1107.37	-40.73
1	30	70	-3.43	-273.44	-3.51	-273.35	-4.71	-78.53	-1112.51	-78.78	-1112.26	-16.25
1	30	71	1.99	-198.98	1.70	-198.70	7.56	24.69	-956.74	22.13	-954.19	50.03
1	30	72	-3.73	-199.26	-3.93	-199.06	6.34	-58.53	-955.57	-58.98	-955.12	20.13
1	30	73	2.32	-393.41	2.32	-393.40	1.36	5.38	-1364.37	5.31	-1364.29	10.34
1	30	74	-2.26	-396.40	-2.26	-396.40	1.22	-109.32	-1372.70	-109.33	-1372.68	4.24
1	30	75	2.32	-368.86	2.30	-368.84	-2.41	7.97	-1313.20	7.63	-1312.87	-21.12
1	30	76	-2.50	-371.99	-2.51	-371.98	-1.76	-103.43	-1320.97	-103.50	-1320.91	-8.60
1	30	77	7.03	-15.23	-0.22	-7.99	-10.43	53.94	-543.66	44.55	-534.27	-74.32
1	30	78	6.95	-7.96	-2.87e-02	-0.98	-7.44	-8.21	-532.83	-10.09	-530.95	-31.31
1	30	79	2.11	-270.95	1.99	-270.83	5.69	17.54	-1107.62	16.11	-1106.18	40.17
1	30	80	-3.47	-272.92	-3.56	-272.83	4.79	-77.56	-1111.12	-77.81	-1110.87	15.99
1	30	81	2.02	-111.75	1.22	-110.95	-9.50	36.60	-769.04	31.87	-764.32	-61.50
1	30	82	-2.71	-109.11	-3.30	-108.53	-7.88	-35.21	-763.46	-36.09	-762.58	-25.30
1	30	83	2.34	-401.70	2.34	-401.70	0.14	4.50	-1381.95	4.50	-1381.95	-0.55
1	30	84	-2.17	-404.71	-2.17	-404.71	0.28	-111.50	-1390.44	-111.50	-1390.44	-0.81
1	30	106	232.84	45.95	46.26	232.53	-7.58	240.60	32.39	32.49	240.50	4.54
1	30	107	204.71	35.52	35.84	204.39	-7.34	230.44	53.65	53.77	230.31	4.70
1	30	108	113.00	15.63	16.14	112.49	-7.05	-22.75	-262.38	-22.83	-262.30	4.30
1	30	109	112.53	15.74	16.14	112.12	6.26	-23.27	-263.35	-23.34	-263.29	-3.90
1	30	110	-4.53	-328.48	-4.56	-328.45	-2.88	-131.80	-1236.54	-131.81	-1236.52	3.58
1	30	111	-4.54	-329.02	-4.57	-328.99	3.23	-132.49	-1237.83	-132.50	-1237.82	-3.61
1	30	112	7.57	-5.46	2.01	9.39e-02	-6.44	-51.53	-536.96	-51.55	-536.94	3.56
1	30	113	-5.46	-197.13	-5.58	-197.01	4.71	-96.88	-958.21	-96.90	-958.20	-3.80
1	30	114	-3.51	-394.32	-3.51	-394.31	1.38	-151.61	-1376.99	-151.61	-1376.99	-1.60
1	30	115	-3.90	-369.51	-3.91	-369.50	-1.82	-143.92	-1323.99	-143.93	-1323.98	2.75
1	30	116	-3.71	-105.79	-4.03	-105.47	-5.69	-74.42	-764.41	-74.43	-764.39	3.52
1	30	117	232.68	45.92	46.16	232.44	6.70	240.50	32.38	32.47	240.41	-4.13
1	30	118	204.47	35.54	35.79	204.23	6.45	230.00	53.44	53.54	229.89	-4.32
1	30	119	-5.25	-271.46	-5.31	-271.40	4.02	-116.34	-1115.58	-116.36	-1115.57	-3.93
1	30	120	-5.46	-196.48	-5.58	-196.36	-4.83	-95.91	-956.59	-95.93	-956.57	3.82
1	30	121	-3.51	-394.10	-3.51	-394.10	-0.71	-151.37	-1376.49	-151.37	-1376.49	1.54
1	30	122	-3.90	-369.91	-3.92	-369.89	2.34	-144.40	-1324.93	-144.41	-1324.92	-2.80
1	30	123	6.78	-5.16	2.04	-0.42	5.84	-52.33	-538.31	-52.35	-538.28	-3.32
1	30	124	-5.25	-270.83	-5.30	-270.78	-3.89	-115.48	-1114.05	-115.49	-1114.04	3.92
1	30	125	-3.73	-106.36	-4.01	-106.08	5.32	-75.38	-765.97	-75.40	-765.96	-3.46
1	30	126	-3.38	-402.36	-3.38	-402.36	0.33	-153.94	-1394.16	-153.95	-1394.15	-0.79
1	30	148	230.53	43.23	43.57	230.19	-7.88	237.17	-5.70	-5.47	236.94	-7.51
1	30	149	209.74	30.66	30.68	209.72	1.62	242.22	64.13	70.35	236.00	-32.71
1	30	150	114.17	7.17	8.88	112.46	-13.43	16.99	-263.22	13.46	-259.69	-31.25
1	30	151	113.61	7.26	8.80	112.07	12.71	16.78	-264.01	13.20	-260.43	31.48
1	30	152	-2.27	-327.58	-2.48	-327.37	-8.24	-89.35	-1229.52	-89.38	-1229.48	-6.01
1	30	153	-2.29	-328.23	-2.52	-328.01	8.56	-89.67	-1230.75	-89.70	-1230.72	6.06
1	30	154	16.10	-19.86	0.31	-4.06	-17.84	-10.71	-537.63	-11.88	-536.46	-24.82
1	30	155	-2.48	-199.52	-3.54	-198.45	14.45	-58.01	-953.18	-58.21	-952.97	13.44

M_G	Cmb	Nodo	N max	N min	N 1	N 2	N 1-2	M max	M min	M 1	M 2	M 1-2
1	30	156	-1.67	-391.83	-1.69	-391.81	3.01	-104.04	-1367.47	-104.05	-1367.47	1.66
1	30	157	-1.90	-367.58	-1.98	-367.50	-5.27	-98.56	-1315.52	-98.57	-1315.51	-3.59
1	30	158	-0.18	-111.39	-2.90	-108.67	-17.17	-34.70	-762.44	-35.19	-761.95	-18.80
1	30	159	230.30	43.26	43.53	230.04	7.03	237.46	-6.19	-5.49	236.75	13.12
1	30	160	209.54	30.60	30.63	209.51	-2.44	242.03	63.89	70.25	235.67	33.05
1	30	161	-2.64	-272.20	-3.13	-271.71	11.51	-76.23	-1109.83	-76.31	-1109.75	9.22
1	30	162	-2.41	-198.82	-3.49	-197.74	-14.54	-57.53	-951.44	-57.73	-951.24	-13.40
1	30	163	-1.66	-391.58	-1.68	-391.56	-2.42	-103.92	-1367.01	-103.92	-1367.01	-1.62
1	30	164	-1.92	-368.05	-2.01	-367.96	5.73	-98.79	-1316.40	-98.80	-1316.39	3.64
1	30	165	15.29	-19.66	0.27	-4.63	17.30	-11.66	-538.74	-12.84	-537.56	24.91
1	30	166	-2.60	-271.45	-3.08	-270.97	-11.38	-75.82	-1108.28	-75.90	-1108.20	-9.18
1	30	167	-0.32	-111.94	-2.93	-109.33	16.85	-37.02	-763.95	-37.51	-763.46	18.80
1	30	168	-1.58	-399.66	-1.58	-399.66	0.29	-105.72	-1384.31	-105.72	-1384.31	-0.65
1	30	190	487.28	125.46	126.39	486.36	18.27	482.64	218.29	218.33	482.60	-3.27
1	30	191	167.78	-54.48	-54.47	167.77	-1.09	293.81	164.73	205.79	252.75	-60.12
1	30	192	94.88	-6.52	-5.19	93.55	-11.54	72.97	-283.16	54.16	-264.35	-79.66
1	30	193	94.39	-6.54	-5.30	93.14	11.15	72.90	-283.69	54.13	-264.92	79.64
1	30	194	2.92	-320.05	2.80	-319.92	-6.35	14.75	-1221.39	14.21	-1220.84	-25.95
1	30	195	2.87	-320.94	2.74	-320.81	6.47	14.66	-1222.57	14.11	-1222.02	25.96
1	30	196	9.90	-23.36	8.29e-02	-13.54	-15.17	50.95	-551.43	42.88	-543.36	-69.25
1	30	197	2.77	-197.30	2.13	-196.66	11.29	26.66	-951.92	24.57	-949.83	45.21
1	30	198	2.98	-382.56	2.97	-382.55	2.19	10.28	-1356.12	10.23	-1356.07	8.46
1	30	199	2.97	-358.84	2.92	-358.79	-4.10	11.85	-1305.37	11.63	-1305.15	-17.12
1	30	200	3.19	-113.25	1.54	-111.60	-13.79	36.65	-768.24	32.68	-764.27	-56.40
1	30	201	487.71	125.51	126.47	486.75	-18.67	482.77	218.24	218.28	482.74	3.15
1	30	202	167.81	-54.52	-54.52	167.80	0.68	293.91	164.52	205.72	252.71	60.28
1	30	203	2.80	-266.96	2.51	-266.68	8.78	19.45	-1104.54	18.34	-1103.44	35.22
1	30	204	2.84	-196.41	2.20	-195.77	-11.26	26.84	-950.20	24.75	-948.10	-45.19
1	30	205	2.99	-382.22	2.98	-382.21	-1.95	10.28	-1355.69	10.23	-1355.64	-8.47
1	30	206	2.94	-359.49	2.89	-359.44	4.28	11.82	-1306.20	11.60	-1305.98	17.12
1	30	207	9.43	-23.61	7.46e-02	-14.26	14.88	50.86	-552.39	42.82	-544.34	69.20
1	30	208	2.85	-265.94	2.57	-265.65	-8.75	19.60	-1103.03	18.49	-1101.93	-35.20
1	30	209	3.08	-113.99	1.47	-112.38	13.62	35.72	-769.70	31.74	-765.73	56.42
1	30	210	3.00	-390.13	3.00	-390.13	0.12	9.78	-1372.59	9.78	-1372.59	-0.30
1	30	211	19.27	-329.78	-39.58	-270.93	-130.69	15.96	-139.05	-25.78	-97.31	-68.76
1	30	212	232.99	-2.56	10.14	220.29	53.21	271.00	-35.33	-29.57	265.24	41.61
1	30	213	-1.71	-396.53	-1.71	-396.53	0.16	2.26	-1357.43	2.25	-1357.42	-3.84
1	30	214	96.61	10.25	12.14	94.72	12.60	20.08	-261.30	18.70	-259.92	19.67
1	30	215	96.94	10.32	12.21	95.05	-12.64	20.37	-264.44	18.87	-262.95	-20.57
1	30	216	3.12	-18.09	2.93	-17.91	1.96	3.04	-543.56	2.37	-542.89	19.12
1	30	217	-1.67	-371.72	-1.67	-371.72	0.25	2.61	-1305.81	2.57	-1305.77	-7.17
1	30	218	-0.39	-117.91	-0.39	-117.91	0.29	2.60	-762.76	2.23	-762.40	16.72
1	30	219	-1.61	-330.71	-1.61	-330.71	0.31	2.92	-1220.28	2.84	-1220.20	-10.12
1	30	220	-1.32	-202.53	-1.32	-202.53	-0.21	1.77	-950.83	1.54	-950.60	14.53
1	30	221	-1.50	-274.00	-1.50	-274.00	0.30	2.59	-1102.08	2.45	-1101.93	-12.62
1	30	222	-1.59	-274.14	-1.59	-274.14	-0.29	2.43	-1100.90	2.29	-1100.76	12.35
1	30	223	233.29	-2.37	10.29	220.63	-53.13	273.64	-35.18	-30.25	268.70	-38.71
1	30	224	-1.69	-330.82	-1.69	-330.82	-0.26	2.79	-1219.11	2.71	-1219.03	9.85
1	30	225	-1.25	-202.51	-1.25	-202.51	0.13	1.92	-951.80	1.69	-951.57	-14.80
1	30	226	-1.73	-371.80	-1.73	-371.80	-0.18	2.55	-1304.90	2.52	-1304.86	6.89
1	30	227	-0.27	-116.12	-0.27	-116.12	-7.40e-02	2.58	-763.73	2.21	-763.35	-17.00
1	30	228	-1.74	-396.57	-1.74	-396.57	-6.91e-02	2.21	-1356.95	2.20	-1356.94	3.54
1	30	229	3.34	-16.23	3.14	-16.03	-1.98	3.08	-539.50	2.38	-538.81	-19.39
1	30	230	-1.73	-404.84	-1.73	-404.84	4.91e-02	2.10	-1374.52	2.10	-1374.52	-0.18
1	30	231	19.30	-330.21	-39.71	-271.20	130.93	5.84	-133.02	-23.67	-103.51	56.81
1	30	232	227.55	0.27	14.28	213.54	-54.67	259.70	-37.43	-32.87	255.14	-36.53
1	30	233	22.73	-341.16	-42.53	-275.89	139.61	15.57	-140.44	-12.95	-111.91	60.30
1	30	234	87.73	9.59	12.04	85.27	-13.63	19.79	-277.40	19.08	-276.69	-14.51
1	30	235	3.87	-20.33	3.48	-19.95	-3.02	2.89	-544.10	2.50	-543.70	-14.67
1	30	236	0.11	-114.56	0.11	-114.55	-0.81	2.67	-763.48	2.47	-763.28	-12.31
1	30	237	-0.73	-197.81	-0.73	-197.81	-0.55	4.13	-943.95	4.03	-943.85	-9.62
1	30	238	-0.88	-265.86	-0.89	-265.86	-0.43	3.82	-1096.21	3.77	-1096.17	-7.16
1	30	239	-0.90	-319.28	-0.90	-319.28	-0.34	3.62	-1214.20	3.60	-1214.18	-5.00
1	30	240	-0.90	-357.76	-0.90	-357.76	-0.24	3.93	-1297.86	3.93	-1297.85	-3.13
1	30	241	-0.90	-381.03	-0.90	-381.03	-0.13	4.30	-1347.94	4.30	-1347.94	-1.46
1	30	242	-0.90	-388.96	-0.90	-388.96	-1.05e-02	4.48	-1364.76	4.48	-1364.76	-5.57e-02
1	30	243	-0.92	-381.47	-0.92	-381.47	0.11	4.37	-1348.37	4.37	-1348.37	1.41
1	30	244	-0.94	-358.59	-0.94	-358.59	0.22	3.98	-1298.69	3.97	-1298.68	3.10
1	30	245	-0.96	-320.43	-0.96	-320.43	0.32	3.56	-1215.39	3.54	-1215.37	4.98
1	30	246	-0.96	-267.20	-0.96	-267.19	0.40	3.70	-1097.76	3.65	-1097.71	7.16
1	30	247	-0.80	-199.06	-0.80	-199.06	0.44	4.00	-945.73	3.90	-945.63	9.63
1	30	248	-1.13e-02	-117.43	-1.96e-02	-117.42	0.99	2.64	-764.97	2.44	-764.77	12.29
1	30	249	3.62	-22.91	3.29	-22.58	2.95	2.84	-550.19	2.46	-549.81	14.55
1	30	250	87.14	9.54	11.98	84.70	13.54	19.74	-277.94	19.02	-277.22	14.63
1	30	251	227.36	0.15	14.19	213.32	54.70	260.59	-38.50	-33.00	255.08	40.21

M_G	Cmb	Nodo	N max	N min	N 1	N 2	N 1-2	M max	M min	M 1	M 2	M 1-2
1	30	252	22.59	-341.31	-42.61	-276.11	-139.55	15.58	-140.61	-13.08	-111.95	-60.45
1	33	43	509.19	130.47	131.74	507.93	-21.86	500.29	241.27	241.29	500.28	2.05
1	33	44	234.98	44.59	44.89	234.69	-7.47	239.90	-8.80	-7.49	238.60	17.96
1	33	45	183.92	-55.55	-55.43	183.80	-5.45	310.22	176.80	219.61	267.41	62.28
1	33	46	215.57	28.88	30.07	214.37	-14.88	251.74	60.87	71.62	240.99	44.01
1	33	47	103.18	-5.65	-5.33	102.86	5.92	77.57	-274.20	56.27	-252.89	83.91
1	33	48	116.92	8.26	8.27	116.91	1.16	22.56	-258.62	16.69	-252.75	40.21
1	33	49	104.04	-5.63	-5.27	103.69	-6.27	76.75	-273.91	54.33	-251.49	-85.79
1	33	50	117.53	8.36	8.39	117.50	-1.91	20.36	-257.66	14.74	-252.04	-39.13
1	33	51	2.21	-328.36	2.17	-328.31	4.03	12.13	-1227.60	11.38	-1226.85	30.50
1	33	52	-2.95	-331.10	-2.99	-331.06	3.37	-92.55	-1233.96	-92.68	-1233.83	12.20
1	33	53	2.27	-327.38	2.22	-327.33	-3.94	12.16	-1226.24	11.38	-1225.46	-31.05
1	33	54	-2.93	-330.33	-2.95	-330.30	-3.10	-92.94	-1232.61	-93.08	-1232.48	-12.47
1	33	55	6.61	-15.28	-0.25	-8.42	10.15	53.94	-544.01	44.71	-534.78	73.72
1	33	56	6.26	-7.52	-9.08e-02	-1.18	6.87	-6.76	-532.70	-8.66	-530.79	31.57
1	33	57	2.07	-198.66	1.78	-198.37	-7.57	24.79	-956.24	22.17	-953.62	-50.60
1	33	58	-3.67	-199.10	-3.88	-198.88	-6.48	-59.59	-955.32	-60.06	-954.86	-20.35
1	33	59	2.33	-393.27	2.33	-393.26	-1.11	5.37	-1364.37	5.29	-1364.28	-10.86
1	33	60	-2.25	-396.34	-2.25	-396.34	-0.66	-109.48	-1372.70	-109.49	-1372.68	-4.52
1	33	61	2.28	-369.13	2.26	-369.11	2.60	8.00	-1313.23	7.68	-1312.91	20.59
1	33	62	-2.52	-372.10	-2.53	-372.09	2.19	-103.09	-1320.97	-103.14	-1320.92	8.33
1	33	63	1.91	-112.03	1.14	-111.27	9.31	35.73	-769.49	31.10	-764.85	60.92
1	33	64	-2.80	-109.24	-3.34	-108.70	7.52	-35.55	-763.55	-36.42	-762.68	25.16
1	33	65	235.15	44.44	44.68	234.91	6.72	240.34	-4.52	-3.90	239.72	-12.28
1	33	66	509.24	130.43	131.62	508.05	21.20	496.78	215.79	215.79	496.78	-0.43
1	33	67	184.19	-55.61	-55.51	184.08	5.07	308.68	167.74	208.75	267.67	-64.01
1	33	68	215.77	29.00	30.05	214.72	13.96	251.02	61.44	71.20	241.26	-41.91
1	33	69	2.18	-270.50	2.06	-270.39	-5.69	17.60	-1107.35	16.12	-1105.87	-40.73
1	33	70	-3.43	-272.72	-3.51	-272.64	-4.71	-78.34	-1110.98	-78.60	-1110.72	-16.25
1	33	71	1.99	-199.73	1.70	-199.44	7.56	24.65	-958.31	22.10	-955.76	50.03
1	33	72	-3.72	-200.01	-3.93	-199.81	6.34	-58.72	-957.19	-59.17	-956.74	20.13
1	33	73	2.32	-393.64	2.32	-393.63	1.33	5.39	-1364.86	5.31	-1364.78	10.33
1	33	74	-2.26	-396.63	-2.26	-396.63	1.21	-109.38	-1373.20	-109.40	-1373.18	4.24
1	33	75	2.32	-368.42	2.30	-368.40	-2.44	7.98	-1312.28	7.64	-1311.94	-21.12
1	33	76	-2.50	-371.55	-2.51	-371.54	-1.76	-103.31	-1320.02	-103.37	-1319.96	-8.60
1	33	77	7.24	-14.84	-0.22	-7.38	-10.45	53.96	-542.42	44.53	-532.99	-74.39
1	33	78	7.24	-7.64	-3.12e-02	-0.37	-7.44	-8.05	-531.52	-9.93	-529.64	-31.31
1	33	79	2.11	-271.66	2.00	-271.54	5.68	17.52	-1109.12	16.08	-1107.68	40.17
1	33	80	-3.47	-273.63	-3.55	-273.55	4.79	-77.75	-1112.66	-77.99	-1112.41	15.99
1	33	81	2.03	-111.04	1.22	-110.24	-9.51	36.64	-767.55	31.91	-762.82	-61.49
1	33	82	-2.71	-108.40	-3.30	-107.81	-7.87	-35.03	-761.92	-35.91	-761.04	-25.30
1	33	83	2.34	-401.70	2.34	-401.70	0.10	4.50	-1381.95	4.50	-1381.95	-0.56
1	33	84	-2.17	-404.71	-2.17	-404.71	0.27	-111.50	-1390.44	-111.50	-1390.44	-0.81
1	33	106	232.70	45.92	46.23	232.39	-7.58	240.37	32.32	32.42	240.27	4.54
1	33	107	204.47	35.50	35.82	204.15	-7.34	229.93	53.53	53.66	229.81	4.70
1	33	108	112.55	15.62	16.14	112.04	-7.05	-22.95	-263.35	-23.03	-263.28	4.30
1	33	109	112.98	15.75	16.15	112.57	6.26	-23.07	-262.37	-23.14	-262.31	-3.90
1	33	110	-4.54	-329.08	-4.56	-329.06	-2.88	-132.06	-1237.86	-132.07	-1237.85	3.58
1	33	111	-4.54	-328.41	-4.57	-328.38	3.23	-132.23	-1236.50	-132.24	-1236.49	-3.61
1	33	112	7.32	-5.82	2.02	-0.52	-6.44	-51.79	-538.29	-51.82	-538.27	3.56
1	33	113	-5.46	-196.38	-5.58	-196.26	4.71	-96.56	-956.57	-96.58	-956.56	-3.80
1	33	114	-3.51	-394.08	-3.51	-394.08	1.38	-151.51	-1376.48	-151.51	-1376.48	-1.60
1	33	115	-3.90	-369.95	-3.91	-369.94	-1.82	-144.11	-1324.95	-144.12	-1324.94	2.75
1	33	116	-3.71	-106.50	-4.02	-106.19	-5.69	-74.72	-765.97	-74.74	-765.96	3.52
1	33	117	232.82	45.95	46.20	232.58	6.70	240.72	32.46	32.54	240.64	-4.13
1	33	118	204.72	35.57	35.81	204.47	6.45	230.50	53.56	53.66	230.39	-4.32
1	33	119	-5.25	-270.75	-5.31	-270.69	4.02	-116.03	-1114.02	-116.05	-1114.01	-3.93
1	33	120	-5.46	-197.24	-5.58	-197.11	-4.83	-96.24	-958.23	-96.25	-958.22	3.82
1	33	121	-3.51	-394.34	-3.51	-394.33	-0.71	-151.47	-1377.00	-151.47	-1377.00	1.54
1	33	122	-3.90	-369.47	-3.91	-369.45	2.34	-144.21	-1323.96	-144.22	-1323.96	-2.80
1	33	123	7.02	-4.80	2.03	0.19	5.84	-52.07	-536.98	-52.09	-536.96	-3.32
1	33	124	-5.25	-271.55	-5.31	-271.49	-3.89	-115.78	-1115.61	-115.80	-1115.60	3.92
1	33	125	-3.74	-105.65	-4.01	-105.37	5.32	-75.07	-764.41	-75.09	-764.39	-3.46
1	33	126	-3.38	-402.36	-3.38	-402.36	0.33	-153.94	-1394.16	-153.95	-1394.15	-0.79
1	33	148	230.40	43.21	43.55	230.06	-7.91	236.97	-5.79	-5.56	236.74	-7.54
1	33	149	209.50	30.65	30.67	209.48	1.61	241.77	64.01	70.25	235.53	-32.71
1	33	150	113.73	7.16	8.88	112.01	-13.43	16.85	-264.16	13.33	-260.64	-31.25
1	33	151	114.05	7.27	8.80	112.52	12.70	16.92	-263.07	13.33	-259.48	31.48
1	33	152	-2.27	-328.18	-2.47	-327.98	-8.24	-89.51	-1230.82	-89.54	-1230.79	-6.01
1	33	153	-2.30	-327.63	-2.52	-327.40	8.56	-89.50	-1229.45	-89.54	-1229.41	6.06
1	33	154	15.83	-20.20	0.31	-4.68	-17.85	-10.86	-538.94	-12.03	-537.77	-24.82
1	33	155	-2.47	-198.77	-3.54	-197.70	14.45	-57.82	-951.56	-58.02	-951.36	13.44
1	33	156	-1.67	-391.60	-1.69	-391.58	3.01	-103.98	-1366.97	-103.98	-1366.97	1.66
1	33	157	-1.90	-368.02	-1.98	-367.94	-5.26	-98.69	-1316.47	-98.70	-1316.46	-3.59
1	33	158	-0.20	-112.09	-2.90	-109.39	-17.18	-34.88	-763.97	-35.37	-763.49	-18.80

M_G	Cmb	Nodo	N max	N min	N 1	N 2	N 1-2	M max	M min	M 1	M 2	M 1-2
1	33	159	230.43	43.28	43.54	230.17	6.99	237.65	-6.10	-5.40	236.95	13.08
1	33	160	209.79	30.61	30.64	209.75	-2.46	242.49	64.01	70.35	236.14	33.04
1	33	161	-2.64	-271.49	-3.14	-270.99	11.51	-76.04	-1108.29	-76.12	-1108.21	9.22
1	33	162	-2.41	-199.57	-3.49	-198.49	-14.54	-57.72	-953.06	-57.92	-952.86	-13.40
1	33	163	-1.66	-391.81	-1.68	-391.79	-2.41	-103.98	-1367.51	-103.98	-1367.51	-1.62
1	33	164	-1.92	-367.61	-2.01	-367.52	5.73	-98.66	-1315.45	-98.67	-1315.44	3.64
1	33	165	15.56	-19.31	0.27	-4.02	17.30	-11.50	-537.43	-12.68	-536.25	24.91
1	33	166	-2.60	-272.17	-3.08	-271.68	-11.38	-76.00	-1109.82	-76.09	-1109.74	-9.17
1	33	167	-0.31	-111.23	-2.93	-108.61	16.85	-36.84	-762.41	-37.33	-761.93	18.80
1	33	168	-1.58	-399.66	-1.58	-399.66	0.29	-105.72	-1384.31	-105.72	-1384.31	-0.65
1	33	190	487.13	125.42	126.34	486.20	18.30	482.44	218.36	218.40	482.40	-3.23
1	33	191	167.52	-54.47	-54.46	167.52	-1.10	293.50	164.48	205.71	252.27	-60.16
1	33	192	94.43	-6.52	-5.19	93.10	-11.52	72.91	-284.00	54.20	-265.29	-79.55
1	33	193	94.84	-6.54	-5.30	93.59	11.18	72.97	-282.85	54.09	-263.98	79.75
1	33	194	2.92	-320.65	2.80	-320.52	-6.33	14.74	-1222.66	14.19	-1222.11	-25.95
1	33	195	2.87	-320.34	2.74	-320.21	6.49	14.68	-1221.29	14.13	-1220.75	25.97
1	33	196	9.71	-23.77	8.87e-02	-14.15	-15.15	50.93	-552.67	42.89	-544.64	-69.18
1	33	197	2.77	-196.56	2.13	-195.92	11.29	26.69	-950.35	24.60	-948.25	45.21
1	33	198	2.98	-382.33	2.97	-382.32	2.23	10.27	-1355.64	10.22	-1355.58	8.46
1	33	199	2.97	-359.27	2.93	-359.23	-4.07	11.84	-1306.30	11.62	-1306.08	-17.11
1	33	200	3.18	-113.95	1.54	-112.31	-13.77	36.61	-769.73	32.65	-765.77	-56.41
1	33	201	487.87	125.56	126.52	486.90	-18.65	482.97	218.17	218.20	482.94	3.18
1	33	202	168.06	-54.53	-54.53	168.06	0.67	294.23	164.77	205.80	253.20	60.23
1	33	203	2.79	-266.26	2.50	-265.97	8.79	19.47	-1103.05	18.37	-1101.94	35.22
1	33	204	2.84	-197.15	2.20	-196.52	-11.25	26.81	-951.77	24.72	-949.68	-45.19
1	33	205	2.99	-382.45	2.98	-382.44	-1.92	10.29	-1356.17	10.24	-1356.12	-8.46
1	33	206	2.94	-359.05	2.88	-359.00	4.31	11.83	-1305.28	11.61	-1305.06	17.13
1	33	207	9.62	-23.20	6.88e-02	-13.65	14.90	50.88	-551.14	42.80	-543.06	69.27
1	33	208	2.86	-266.64	2.57	-266.36	-8.74	19.57	-1104.53	18.47	-1103.42	-35.20
1	33	209	3.09	-113.29	1.47	-111.67	13.63	35.76	-768.20	31.78	-764.23	56.40
1	33	210	3.00	-390.13	3.00	-390.13	0.15	9.78	-1372.59	9.78	-1372.59	-0.29
1	33	211	19.24	-329.95	-39.66	-271.06	-130.76	16.18	-139.24	-25.54	-97.52	-68.87
1	33	212	232.78	-2.55	10.17	220.07	53.20	270.53	-35.44	-29.66	264.75	41.64
1	33	213	-1.71	-396.32	-1.71	-396.32	0.11	2.21	-1356.94	2.20	-1356.93	-3.84
1	33	214	96.18	10.26	12.14	94.30	12.56	20.11	-262.25	18.73	-260.87	19.67
1	33	215	97.36	10.32	12.21	95.47	-12.69	20.34	-263.49	18.84	-262.00	-20.57
1	33	216	3.11	-18.65	2.94	-18.47	1.93	3.10	-544.86	2.44	-544.20	19.00
1	33	217	-1.68	-371.32	-1.68	-371.31	0.21	2.56	-1304.87	2.52	-1304.83	-7.17
1	33	218	-0.39	-118.57	-0.39	-118.57	0.27	2.58	-764.29	2.21	-763.93	16.70
1	33	219	-1.62	-330.15	-1.62	-330.15	0.27	2.89	-1218.99	2.80	-1218.90	-10.13
1	33	220	-1.32	-203.22	-1.32	-203.22	-0.22	1.77	-952.43	1.55	-952.21	14.53
1	33	221	-1.51	-273.35	-1.51	-273.35	0.28	2.58	-1100.55	2.43	-1100.41	-12.63
1	33	222	-1.58	-274.79	-1.58	-274.79	-0.31	2.44	-1102.42	2.30	-1102.28	12.35
1	33	223	233.51	-2.38	10.27	220.85	-53.14	274.10	-35.08	-30.17	269.19	-38.68
1	33	224	-1.68	-331.37	-1.68	-331.37	-0.29	2.82	-1220.40	2.74	-1220.32	9.84
1	33	225	-1.25	-201.82	-1.25	-201.82	0.12	1.92	-950.20	1.69	-949.97	-14.80
1	33	226	-1.72	-372.20	-1.72	-372.20	-0.22	2.60	-1305.84	2.56	-1305.81	6.88
1	33	227	-0.27	-115.46	-0.27	-115.46	-9.28e-02	2.60	-762.20	2.22	-761.82	-17.01
1	33	228	-1.73	-396.78	-1.73	-396.78	-0.13	2.26	-1357.44	2.25	-1357.43	3.53
1	33	229	3.36	-15.68	3.14	-15.46	-2.01	3.01	-538.20	2.31	-537.50	-19.51
1	33	230	-1.73	-404.84	-1.73	-404.84	-1.04e-02	2.10	-1374.52	2.10	-1374.52	-0.19
1	33	231	19.33	-330.04	-39.64	-271.07	130.86	5.60	-132.82	-23.92	-103.30	56.69
1	33	232	227.34	0.28	14.30	213.32	-54.66	259.23	-37.53	-32.95	254.66	-36.56
1	33	233	22.70	-341.33	-42.61	-276.02	139.68	15.82	-140.65	-12.71	-112.12	60.42
1	33	234	87.30	9.59	12.04	84.85	-13.58	19.83	-278.35	19.12	-277.64	-14.51
1	33	235	3.85	-20.88	3.48	-20.52	-2.99	2.96	-545.40	2.58	-545.02	-14.55
1	33	236	0.10	-115.22	9.91e-02	-115.21	-0.79	2.65	-765.01	2.45	-764.81	-12.30
1	33	237	-0.73	-198.50	-0.73	-198.50	-0.54	4.13	-945.56	4.03	-945.46	-9.62
1	33	238	-0.88	-266.51	-0.88	-266.51	-0.41	3.84	-1097.74	3.79	-1097.69	-7.16
1	33	239	-0.89	-319.83	-0.89	-319.83	-0.30	3.66	-1215.50	3.64	-1215.48	-5.00
1	33	240	-0.89	-358.16	-0.89	-358.16	-0.19	3.98	-1298.80	3.97	-1298.80	-3.12
1	33	241	-0.89	-381.25	-0.89	-381.24	-7.32e-02	4.36	-1348.43	4.35	-1348.43	-1.46
1	33	242	-0.90	-388.96	-0.90	-388.96	4.90e-02	4.48	-1364.76	4.48	-1364.76	-5.05e-02
1	33	243	-0.92	-381.26	-0.92	-381.26	0.17	4.32	-1347.87	4.31	-1347.87	1.42
1	33	244	-0.95	-358.19	-0.95	-358.19	0.27	3.93	-1297.74	3.93	-1297.74	3.10
1	33	245	-0.97	-319.87	-0.97	-319.87	0.36	3.53	-1214.10	3.51	-1214.07	4.98
1	33	246	-0.97	-266.54	-0.97	-266.54	0.42	3.68	-1096.24	3.64	-1096.19	7.16
1	33	247	-0.80	-198.37	-0.80	-198.37	0.45	4.00	-944.12	3.90	-944.03	9.63
1	33	248	-4.29e-03	-116.77	-1.29e-02	-116.76	1.00	2.66	-763.44	2.46	-763.24	12.30
1	33	249	3.63	-22.36	3.29	-22.01	2.98	2.77	-548.88	2.38	-548.49	14.67
1	33	250	87.56	9.54	11.98	85.12	13.59	19.71	-276.99	18.98	-276.27	14.62
1	33	251	227.57	0.14	14.16	213.54	54.71	261.06	-38.40	-32.91	255.57	40.17
1	33	252	22.62	-341.14	-42.54	-275.98	-139.49	15.33	-140.39	-13.32	-111.74	-60.34
1	62	43	502.33	128.95	130.11	501.17	-20.82	495.92	241.98	242.01	495.89	2.98
1	62	44	233.39	44.51	44.55	233.35	-2.68	238.77	-8.78	-7.89	237.89	14.77

M_G	Cmb	Nodo	N max	N min	N 1	N 2	N 1-2	M max	M min	M 1	M 2	M 1-2
1	62	45	178.89	-55.15	-55.10	178.84	-3.41	305.77	175.99	218.74	263.02	61.00
1	62	46	213.65	29.64	30.27	213.01	-10.80	249.18	61.95	71.44	239.69	41.06
1	62	47	100.60	-5.83	-5.27	100.04	7.69	76.45	-276.53	56.21	-256.29	82.07
1	62	48	115.90	8.23	8.46	115.67	4.96	21.54	-259.64	16.39	-254.49	37.72
1	62	49	100.81	-5.85	-5.28	100.24	-7.79	75.48	-277.20	54.28	-256.00	-83.83
1	62	50	115.90	8.26	8.52	115.64	-5.28	19.17	-259.92	14.25	-255.00	-36.74
1	62	51	2.43	-325.53	2.36	-325.46	4.75	13.00	-1225.18	12.32	-1224.50	28.95
1	62	52	-2.75	-329.75	-2.83	-329.68	4.87	-91.33	-1232.06	-91.42	-1231.97	10.18
1	62	53	2.45	-325.57	2.38	-325.50	-4.73	12.99	-1225.53	12.28	-1224.82	-29.52
1	62	54	-2.75	-329.87	-2.82	-329.80	-4.81	-91.92	-1232.49	-92.02	-1232.39	-10.51
1	62	55	7.68	-17.68	-0.15	-9.85	11.72	53.04	-545.98	44.21	-537.15	72.18
1	62	56	9.39	-11.23	2.94e-02	-1.87	10.27	-7.30	-533.70	-8.96	-532.03	29.56
1	62	57	2.27	-198.48	1.89	-198.10	-8.73	25.40	-955.43	22.95	-952.98	-48.95
1	62	58	-3.37	-199.43	-3.78	-199.02	-8.97	-59.13	-955.22	-59.50	-954.85	-18.22
1	62	59	2.54	-389.99	2.53	-389.99	-1.44	6.97	-1361.93	6.89	-1361.86	-10.20
1	62	60	-2.07	-395.01	-2.08	-395.00	-1.40	-107.72	-1371.22	-107.74	-1371.21	-3.70
1	62	61	2.49	-365.74	2.47	-365.71	3.07	9.25	-1310.41	8.97	-1310.12	19.38
1	62	62	-2.33	-370.51	-2.36	-370.48	3.13	-101.50	-1318.89	-101.54	-1318.86	6.76
1	62	63	2.27	-112.14	1.26	-111.13	10.69	36.05	-768.60	31.65	-764.20	59.35
1	62	64	-2.16	-109.48	-3.20	-108.44	10.51	-34.75	-762.59	-35.49	-761.86	23.18
1	62	65	233.37	44.28	44.31	233.34	2.43	239.37	-5.06	-4.41	238.72	-12.53
1	62	66	502.44	128.86	129.98	501.32	20.42	492.30	216.49	216.50	492.29	-1.24
1	62	67	178.96	-55.23	-55.19	178.92	3.27	303.90	166.66	207.74	262.82	-62.85
1	62	68	213.59	29.64	30.23	213.01	10.36	247.99	62.24	70.89	239.34	-39.13
1	62	69	2.37	-269.64	2.20	-269.48	-6.65	18.21	-1106.99	16.86	-1105.63	-39.06
1	62	70	-3.22	-272.78	-3.39	-272.61	-6.84	-77.70	-1111.16	-77.89	-1110.97	-14.09
1	62	71	2.23	-198.41	1.85	-198.03	8.70	25.37	-955.23	22.98	-952.84	48.37
1	62	72	-3.39	-199.29	-3.79	-198.89	8.88	-57.95	-954.77	-58.31	-954.41	17.98
1	62	73	2.53	-389.97	2.52	-389.96	1.53	6.97	-1361.78	6.90	-1361.71	9.64
1	62	74	-2.07	-394.96	-2.08	-394.95	1.57	-107.55	-1371.05	-107.56	-1371.05	3.34
1	62	75	2.51	-365.78	2.48	-365.75	-3.01	9.23	-1310.69	8.93	-1310.38	-19.94
1	62	76	-2.33	-370.60	-2.36	-370.58	-3.01	-101.87	-1319.21	-101.92	-1319.17	-7.11
1	62	77	7.83	-17.70	-0.13	-9.74	-11.83	53.00	-545.93	44.03	-536.96	-72.76
1	62	78	9.64	-11.49	6.30e-02	-1.92	-10.52	-9.21	-534.22	-10.85	-532.57	-29.32
1	62	79	2.33	-269.60	2.17	-269.44	6.63	18.21	-1106.67	16.89	-1105.35	38.47
1	62	80	-3.23	-272.65	-3.40	-272.48	6.82	-76.85	-1110.70	-77.04	-1110.52	13.79
1	62	81	2.33	-112.18	1.30	-111.16	-10.79	36.37	-768.73	31.88	-764.24	-59.93
1	62	82	-2.11	-109.62	-3.18	-108.54	-10.68	-35.67	-763.09	-36.42	-762.35	-23.28
1	62	83	2.54	-398.07	2.54	-398.07	4.40e-02	6.21	-1378.99	6.21	-1378.99	-0.39
1	62	84	-1.99	-403.12	-1.99	-403.12	8.51e-02	-109.60	-1388.50	-109.60	-1388.50	-0.43
1	62	106	232.53	46.20	46.25	232.49	-2.86	240.45	32.45	32.47	240.43	1.84
1	62	107	204.36	35.79	35.83	204.32	-2.78	230.17	53.72	53.74	230.16	1.81
1	62	108	112.42	16.07	16.14	112.35	-2.68	-22.88	-262.62	-22.89	-262.60	1.72
1	62	109	112.32	16.09	16.14	112.26	2.35	-23.27	-263.00	-23.28	-262.99	-1.46
1	62	110	-4.56	-328.64	-4.56	-328.64	-1.10	-131.89	-1236.94	-131.89	-1236.93	1.30
1	62	111	-4.56	-328.80	-4.57	-328.80	1.20	-132.42	-1237.41	-132.42	-1237.41	-1.40
1	62	112	3.62	-1.70	2.01	-9.46e-02	-2.44	-51.63	-537.35	-51.63	-537.35	1.46
1	62	113	-5.56	-196.80	-5.58	-196.78	1.77	-96.80	-957.69	-96.80	-957.69	-1.45
1	62	114	-3.51	-394.24	-3.51	-394.24	0.51	-151.58	-1376.83	-151.58	-1376.83	-0.66
1	62	115	-3.91	-369.64	-3.91	-369.64	-0.70	-143.99	-1324.28	-143.99	-1324.28	0.97
1	62	116	-3.98	-105.74	-4.03	-105.69	-2.15	-74.53	-764.88	-74.53	-764.87	1.40
1	62	117	232.52	46.14	46.17	232.48	2.52	240.49	32.48	32.49	240.48	-1.57
1	62	118	204.34	35.76	35.80	204.30	2.42	230.06	53.56	53.58	230.04	-1.60
1	62	119	-5.30	-271.19	-5.31	-271.18	1.50	-116.26	-1115.09	-116.26	-1115.09	-1.51
1	62	120	-5.56	-196.61	-5.58	-196.59	-1.83	-96.03	-957.08	-96.03	-957.08	1.46
1	62	121	-3.51	-394.17	-3.51	-394.17	-0.28	-151.40	-1376.65	-151.40	-1376.65	0.51
1	62	122	-3.91	-369.76	-3.92	-369.76	0.87	-144.35	-1324.62	-144.35	-1324.62	-1.10
1	62	123	3.37	-1.57	2.04	-0.24	2.19	-52.27	-537.88	-52.27	-537.88	-1.25
1	62	124	-5.29	-271.01	-5.30	-271.00	-1.48	-115.58	-1114.52	-115.59	-1114.52	1.45
1	62	125	-3.97	-105.90	-4.01	-105.86	1.99	-75.30	-765.48	-75.30	-765.47	-1.31
1	62	126	-3.38	-402.36	-3.38	-402.36	0.11	-153.95	-1394.15	-153.95	-1394.15	-0.37
1	62	148	231.64	43.86	43.91	231.59	-3.08	238.19	-5.51	-5.04	237.72	-10.68
1	62	149	211.36	30.29	30.47	211.18	5.71	244.77	63.28	70.58	237.47	-35.66
1	62	150	114.74	7.83	8.70	113.86	-9.63	17.94	-261.72	13.81	-257.58	-33.74
1	62	151	114.58	7.85	8.67	113.76	9.33	17.81	-262.01	13.65	-257.85	33.87
1	62	152	-2.50	-328.66	-2.64	-328.52	-6.74	-90.52	-1230.89	-90.58	-1230.84	-8.02
1	62	153	-2.51	-328.88	-2.65	-328.74	6.85	-90.76	-1231.36	-90.82	-1231.31	8.01
1	62	154	13.06	-16.01	0.19	-3.13	-14.44	-10.14	-536.09	-11.51	-534.72	-26.83
1	62	155	-2.92	-199.33	-3.65	-198.60	11.96	-58.57	-953.87	-58.84	-953.60	15.57
1	62	156	-1.85	-393.25	-1.87	-393.23	2.26	-105.82	-1369.13	-105.83	-1369.13	2.48
1	62	157	-2.10	-368.98	-2.15	-368.93	-4.32	-100.11	-1317.23	-100.13	-1317.21	-5.16
1	62	158	-1.17	-110.53	-3.04	-108.65	-14.18	-35.46	-762.77	-36.05	-762.18	-20.78
1	62	159	231.59	43.84	43.88	231.55	2.74	238.36	-5.69	-5.01	237.68	12.88
1	62	160	211.33	30.25	30.45	211.13	-6.04	244.77	63.15	70.52	237.40	35.83
1	62	161	-2.92	-272.34	-3.25	-272.01	9.38	-76.96	-1110.22	-77.08	-1110.09	11.38

M_G	Cmb	Nodo	N max	N min	N 1	N 2	N 1-2	M max	M min	M 1	M 2	M 1-2
1	62	162	-2.90	-199.10	-3.63	-198.36	-12.00	-58.24	-953.21	-58.51	-952.94	-15.55
1	62	163	-1.85	-393.16	-1.86	-393.15	-2.06	-105.73	-1368.96	-105.73	-1368.96	-2.52
1	62	164	-2.11	-369.15	-2.16	-369.09	4.48	-100.28	-1317.56	-100.30	-1317.54	5.13
1	62	165	12.76	-15.90	0.18	-3.31	14.22	-10.59	-536.51	-11.97	-535.13	26.90
1	62	166	-2.91	-272.09	-3.23	-271.76	-9.35	-76.66	-1109.63	-76.79	-1109.50	-11.37
1	62	167	-1.21	-110.70	-3.05	-108.87	14.05	-36.47	-763.35	-37.07	-762.75	20.81
1	62	168	-1.77	-401.24	-1.77	-401.24	0.10	-107.61	-1386.25	-107.61	-1386.25	-0.28
1	62	190	494.20	127.02	128.03	493.18	19.30	487.09	217.56	217.58	487.07	-2.35
1	62	191	172.83	-54.81	-54.81	172.83	0.95	298.41	165.62	206.70	257.33	-61.38
1	62	192	97.47	-6.18	-5.25	96.54	-9.78	74.08	-280.45	54.21	-260.58	-81.54
1	62	193	97.32	-6.19	-5.29	96.42	9.63	74.05	-280.64	54.19	-260.78	81.56
1	62	194	2.70	-322.64	2.60	-322.54	-5.64	13.89	-1223.31	13.28	-1222.70	-27.51
1	62	195	2.68	-322.97	2.58	-322.87	5.68	13.82	-1223.76	13.21	-1223.15	27.50
1	62	196	8.90	-20.80	-1.53e-02	-11.88	-13.61	51.84	-548.97	43.37	-540.51	-70.81
1	62	197	2.54	-197.73	2.02	-197.22	10.13	26.02	-953.32	23.77	-951.07	46.86
1	62	198	2.78	-385.92	2.77	-385.91	1.85	8.68	-1358.74	8.62	-1358.68	9.13
1	62	199	2.76	-362.06	2.72	-362.02	-3.64	10.59	-1307.83	10.34	-1307.58	-18.32
1	62	200	2.77	-112.80	1.42	-111.46	-12.40	36.34	-768.53	32.14	-764.34	-57.96
1	62	201	494.45	127.06	128.10	493.41	-19.46	487.16	217.57	217.59	487.14	2.32
1	62	202	172.88	-54.84	-54.83	172.87	-1.11	298.51	165.56	206.69	257.38	61.46
1	62	203	2.60	-268.09	2.37	-267.86	7.81	18.81	-1105.46	17.60	-1104.25	36.90
1	62	204	2.56	-197.41	2.05	-196.90	-10.12	26.13	-952.67	23.88	-950.42	-46.85
1	62	205	2.78	-385.79	2.78	-385.79	-1.76	8.70	-1358.58	8.64	-1358.51	-9.16
1	62	206	2.74	-362.29	2.71	-362.26	3.70	10.56	-1308.15	10.31	-1307.89	18.30
1	62	207	8.72	-20.87	-1.81e-02	-12.13	13.50	51.79	-549.32	43.33	-540.86	70.81
1	62	208	2.62	-267.71	2.39	-267.49	-7.80	18.91	-1104.89	17.70	-1103.68	-36.90
1	62	209	2.72	-113.06	1.39	-111.73	12.33	35.95	-769.08	31.76	-764.89	57.98
1	62	210	2.79	-393.76	2.79	-393.76	4.15e-02	8.07	-1375.55	8.07	-1375.55	-0.13
1	62	211	20.34	-333.32	-40.51	-272.47	-133.48	18.86	-141.15	-22.18	-100.11	-69.88
1	62	212	231.09	-1.68	11.43	217.98	53.67	265.99	-35.78	-30.42	260.64	39.83
1	62	213	-1.46	-391.74	-1.46	-391.74	6.04e-02	2.90	-1354.41	2.89	-1354.40	-3.13
1	62	214	93.55	10.06	12.10	91.50	12.89	19.93	-265.96	18.82	-264.85	17.77
1	62	215	94.01	10.09	12.14	91.97	-12.93	20.13	-268.28	18.91	-267.06	-18.74
1	62	216	3.34	-19.03	3.10	-18.80	2.28	3.05	-544.23	2.48	-543.66	17.61
1	62	217	-1.44	-367.47	-1.44	-367.47	9.13e-02	3.02	-1303.26	2.99	-1303.23	-5.94
1	62	218	-0.23	-117.11	-0.24	-117.10	0.45	2.61	-763.57	2.31	-763.26	15.28
1	62	219	-1.41	-327.30	-1.41	-327.30	0.10	3.10	-1218.31	3.04	-1218.25	-8.55
1	62	220	-1.14	-201.29	-1.14	-201.29	2.40e-02	2.49	-949.25	2.32	-949.07	12.94
1	62	221	-1.34	-271.65	-1.34	-271.65	7.35e-02	2.93	-1100.21	2.82	-1100.10	-10.95
1	62	222	-1.37	-271.76	-1.37	-271.76	-6.94e-02	2.86	-1099.95	2.75	-1099.84	10.67
1	62	223	231.49	-1.57	11.50	218.42	-53.62	269.70	-36.17	-31.08	264.61	-39.15
1	62	224	-1.44	-327.38	-1.44	-327.38	-8.10e-02	3.05	-1217.99	3.00	-1217.94	8.27
1	62	225	-1.11	-201.19	-1.11	-201.19	-5.44e-02	2.56	-949.36	2.38	-949.18	-13.22
1	62	226	-1.47	-367.53	-1.47	-367.53	-6.11e-02	2.99	-1302.99	2.97	-1302.96	5.66
1	62	227	-0.19	-116.30	-0.19	-116.30	-0.36	2.60	-763.58	2.28	-763.27	-15.56
1	62	228	-1.48	-391.77	-1.48	-391.77	-2.45e-02	2.88	-1354.27	2.87	-1354.26	2.84
1	62	229	3.43	-18.12	3.19	-17.88	-2.29	2.97	-542.37	2.38	-541.78	-17.95
1	62	230	-1.47	-399.87	-1.47	-399.87	1.88e-02	2.84	-1371.44	2.84	-1371.44	-0.16
1	62	231	20.32	-333.57	-40.59	-272.67	133.58	8.72	-135.26	-20.46	-106.08	57.88
1	62	232	229.30	-0.58	13.00	215.72	-54.20	264.39	-37.02	-32.07	259.43	-38.33
1	62	233	21.62	-337.70	-41.65	-274.43	136.86	12.45	-138.09	-16.40	-109.24	59.25
1	62	234	90.49	9.82	12.07	88.23	-13.31	19.91	-273.27	18.99	-272.35	-16.40
1	62	235	3.63	-19.72	3.32	-19.41	-2.69	2.90	-544.21	2.43	-543.74	-16.11
1	62	236	-4.58e-02	-115.77	-4.93e-02	-115.76	-0.64	2.63	-763.60	2.39	-763.36	-13.74
1	62	237	-0.91	-199.49	-0.91	-199.48	-0.31	3.39	-946.50	3.26	-946.37	-11.21
1	62	238	-1.10	-268.64	-1.10	-268.64	-0.20	3.39	-1098.09	3.32	-1098.02	-8.84
1	62	239	-1.14	-323.06	-1.14	-323.06	-0.14	3.37	-1216.11	3.34	-1216.07	-6.57
1	62	240	-1.15	-362.28	-1.15	-362.28	-9.58e-02	3.52	-1300.35	3.50	-1300.33	-4.35
1	62	241	-1.16	-385.96	-1.16	-385.96	-5.04e-02	3.67	-1350.92	3.66	-1350.92	-2.16
1	62	242	-1.16	-393.93	-1.16	-393.93	-4.09e-03	3.74	-1367.84	3.74	-1367.84	-2.75e-02
1	62	243	-1.17	-386.13	-1.17	-386.13	4.26e-02	3.69	-1351.08	3.69	-1351.08	2.13
1	62	244	-1.17	-362.59	-1.17	-362.59	8.89e-02	3.53	-1300.66	3.52	-1300.64	4.33
1	62	245	-1.16	-323.49	-1.16	-323.49	0.14	3.35	-1216.56	3.32	-1216.52	6.55
1	62	246	-1.13	-269.14	-1.13	-269.14	0.19	3.34	-1098.68	3.27	-1098.60	8.83
1	62	247	-0.94	-199.95	-0.94	-199.95	0.27	3.34	-947.17	3.21	-947.04	11.22
1	62	248	-9.23e-02	-116.84	-9.66e-02	-116.84	0.71	2.62	-764.16	2.37	-763.91	13.73
1	62	249	3.54	-20.67	3.24	-20.38	2.66	2.88	-546.50	2.41	-546.03	16.07
1	62	250	90.30	9.80	12.05	88.05	13.27	19.89	-273.45	18.97	-272.52	16.45
1	62	251	229.26	-0.62	12.97	215.67	54.22	264.80	-37.44	-32.12	259.48	39.75
1	62	252	21.56	-337.81	-41.69	-274.56	-136.86	12.46	-138.16	-16.44	-109.25	-59.31
1	65	43	502.27	128.93	130.10	501.10	-20.83	495.85	242.01	242.04	495.81	2.96
1	65	44	233.33	44.51	44.55	233.30	-2.67	238.70	-8.81	-7.93	237.81	14.79
1	65	45	178.79	-55.14	-55.09	178.74	-3.41	305.65	175.89	218.71	262.83	61.02
1	65	46	213.56	29.64	30.27	212.92	-10.79	249.01	61.90	71.40	239.51	41.06
1	65	47	100.42	-5.83	-5.27	99.87	7.68	76.42	-276.85	56.22	-256.65	82.03

M_G	Cmb	Nodo	N max	N min	N 1	N 2	N 1-2	M max	M min	M 1	M 2	M 1-2
1	65	48	115.73	8.23	8.45	115.50	4.96	21.49	-260.00	16.34	-254.85	37.72
1	65	49	100.98	-5.85	-5.28	100.41	-7.80	75.51	-276.88	54.26	-255.63	-83.87
1	65	50	116.07	8.26	8.52	115.82	-5.28	19.22	-259.56	14.30	-254.63	-36.74
1	65	51	2.43	-325.76	2.36	-325.69	4.74	12.99	-1225.67	12.31	-1224.99	28.95
1	65	52	-2.75	-329.99	-2.82	-329.91	4.87	-91.39	-1232.56	-91.49	-1232.47	10.18
1	65	53	2.45	-325.34	2.38	-325.27	-4.73	12.99	-1225.04	12.29	-1224.34	-29.52
1	65	54	-2.75	-329.64	-2.82	-329.57	-4.81	-91.86	-1231.99	-91.95	-1231.89	-10.51
1	65	55	7.60	-17.83	-0.15	-10.08	11.71	53.03	-546.45	44.22	-537.64	72.16
1	65	56	9.29	-11.36	3.04e-02	-2.10	10.27	-7.36	-534.20	-9.02	-532.53	29.56
1	65	57	2.27	-198.20	1.89	-197.82	-8.73	25.41	-954.83	22.96	-952.38	-48.95
1	65	58	-3.37	-199.15	-3.78	-198.73	-8.97	-59.06	-954.60	-59.43	-954.23	-18.22
1	65	59	2.53	-389.90	2.53	-389.90	-1.45	6.96	-1361.75	6.89	-1361.67	-10.20
1	65	60	-2.07	-394.92	-2.08	-394.91	-1.40	-107.70	-1371.03	-107.71	-1371.02	-3.70
1	65	61	2.49	-365.90	2.47	-365.88	3.06	9.25	-1310.76	8.97	-1310.48	19.38
1	65	62	-2.33	-370.68	-2.36	-370.65	3.13	-101.55	-1319.26	-101.59	-1319.22	6.76
1	65	63	2.27	-112.41	1.26	-111.40	10.69	36.03	-769.18	31.63	-764.78	59.36
1	65	64	-2.16	-109.76	-3.20	-108.72	10.51	-34.82	-763.18	-35.56	-762.45	23.18
1	65	65	233.43	44.29	44.32	233.39	2.44	239.44	-5.02	-4.38	238.80	-12.52
1	65	66	502.50	128.88	130.00	501.38	20.41	492.38	216.47	216.47	492.37	-1.26
1	65	67	179.06	-55.24	-55.19	179.01	3.27	304.02	166.75	207.77	263.01	-62.83
1	65	68	213.68	29.65	30.23	213.10	10.36	248.16	62.29	70.93	239.52	-39.13
1	65	69	2.36	-269.37	2.20	-269.20	-6.65	18.22	-1106.42	16.86	-1105.06	-39.06
1	65	70	-3.22	-272.51	-3.39	-272.33	-6.84	-77.63	-1110.57	-77.82	-1110.38	-14.09
1	65	71	2.23	-198.69	1.85	-198.31	8.70	25.36	-955.83	22.97	-953.44	48.37
1	65	72	-3.39	-199.58	-3.79	-199.18	8.88	-58.02	-955.39	-58.38	-955.03	17.98
1	65	73	2.53	-390.06	2.52	-390.05	1.51	6.97	-1361.97	6.91	-1361.90	9.64
1	65	74	-2.07	-395.05	-2.08	-395.04	1.57	-107.57	-1371.25	-107.58	-1371.24	3.34
1	65	75	2.51	-365.61	2.48	-365.58	-3.02	9.23	-1310.33	8.93	-1310.03	-19.94
1	65	76	-2.33	-370.43	-2.36	-370.41	-3.01	-101.83	-1318.85	-101.87	-1318.81	-7.11
1	65	77	7.91	-17.55	-0.13	-9.50	-11.83	53.01	-545.45	44.02	-536.47	-72.79
1	65	78	9.74	-11.37	6.20e-02	-1.69	-10.52	-9.15	-533.71	-10.79	-532.07	-29.32
1	65	79	2.33	-269.87	2.17	-269.71	6.63	18.20	-1107.24	16.88	-1105.93	38.47
1	65	80	-3.23	-272.92	-3.40	-272.75	6.82	-76.92	-1111.29	-77.11	-1111.11	13.79
1	65	81	2.33	-111.91	1.30	-110.88	-10.79	36.39	-768.15	31.90	-763.66	-59.93
1	65	82	-2.11	-109.34	-3.19	-108.27	-10.68	-35.60	-762.50	-36.35	-761.75	-23.28
1	65	83	2.54	-398.07	2.54	-398.07	3.02e-02	6.21	-1378.99	6.21	-1378.99	-0.39
1	65	84	-1.99	-403.12	-1.99	-403.12	8.45e-02	-109.60	-1388.50	-109.60	-1388.50	-0.43
1	65	106	232.48	46.19	46.23	232.44	-2.86	240.36	32.43	32.44	240.34	1.84
1	65	107	204.27	35.78	35.82	204.22	-2.78	229.98	53.67	53.69	229.96	1.81
1	65	108	112.25	16.06	16.14	112.17	-2.68	-22.96	-262.99	-22.97	-262.98	1.72
1	65	109	112.49	16.09	16.15	112.43	2.35	-23.19	-262.62	-23.20	-262.61	-1.46
1	65	110	-4.56	-328.87	-4.56	-328.87	-1.10	-131.99	-1237.44	-131.99	-1237.44	1.30
1	65	111	-4.56	-328.57	-4.57	-328.57	1.20	-132.32	-1236.90	-132.32	-1236.90	-1.40
1	65	112	3.55	-1.87	2.02	-0.33	-2.44	-51.73	-537.86	-51.73	-537.86	1.46
1	65	113	-5.56	-196.51	-5.58	-196.49	1.77	-96.67	-957.06	-96.68	-957.06	-1.45
1	65	114	-3.51	-394.15	-3.51	-394.15	0.51	-151.54	-1376.64	-151.54	-1376.64	-0.66
1	65	115	-3.91	-369.81	-3.91	-369.81	-0.70	-144.06	-1324.65	-144.06	-1324.65	0.97
1	65	116	-3.98	-106.01	-4.02	-105.97	-2.15	-74.64	-765.48	-74.65	-765.47	1.40
1	65	117	232.57	46.15	46.19	232.54	2.52	240.58	32.50	32.52	240.57	-1.57
1	65	118	204.43	35.77	35.80	204.40	2.42	230.25	53.61	53.62	230.24	-1.60
1	65	119	-5.30	-270.92	-5.31	-270.91	1.50	-116.14	-1114.49	-116.14	-1114.49	-1.51
1	65	120	-5.56	-196.90	-5.58	-196.88	-1.83	-96.15	-957.71	-96.15	-957.71	1.46
1	65	121	-3.51	-394.26	-3.51	-394.26	-0.28	-151.44	-1376.84	-151.44	-1376.84	0.51
1	65	122	-3.91	-369.59	-3.92	-369.59	0.87	-144.28	-1324.25	-144.28	-1324.25	-1.10
1	65	123	3.43	-1.40	2.03	-5.08e-04	2.19	-52.17	-537.37	-52.17	-537.37	-1.25
1	65	124	-5.30	-271.28	-5.30	-271.27	-1.48	-115.70	-1115.12	-115.71	-1115.12	1.45
1	65	125	-3.97	-105.63	-4.01	-105.59	1.99	-75.18	-764.88	-75.18	-764.87	-1.31
1	65	126	-3.38	-402.36	-3.38	-402.36	0.11	-153.95	-1394.15	-153.95	-1394.15	-0.37
1	65	148	231.59	43.85	43.90	231.54	-3.09	238.12	-5.54	-5.07	237.64	-10.69
1	65	149	211.26	30.29	30.47	211.08	5.71	244.60	63.23	70.54	237.29	-35.66
1	65	150	114.57	7.83	8.70	113.69	-9.63	17.89	-262.08	13.76	-257.95	-33.74
1	65	151	114.75	7.85	8.67	113.93	9.33	17.87	-261.65	13.70	-257.48	33.87
1	65	152	-2.50	-328.89	-2.64	-328.75	-6.74	-90.58	-1231.40	-90.64	-1231.34	-8.02
1	65	153	-2.51	-328.65	-2.65	-328.50	6.85	-90.70	-1230.86	-90.76	-1230.80	8.01
1	65	154	12.96	-16.14	0.19	-3.37	-14.44	-10.20	-536.59	-11.57	-535.22	-26.83
1	65	155	-2.92	-199.04	-3.65	-198.31	11.96	-58.50	-953.25	-58.77	-952.98	15.57
1	65	156	-1.85	-393.16	-1.87	-393.15	2.27	-105.80	-1368.94	-105.80	-1368.94	2.48
1	65	157	-2.10	-369.15	-2.15	-369.10	-4.32	-100.15	-1317.59	-100.17	-1317.57	-5.16
1	65	158	-1.17	-110.80	-3.04	-108.93	-14.18	-35.53	-763.36	-36.12	-762.77	-20.78
1	65	159	231.64	43.85	43.89	231.61	2.73	238.43	-5.65	-4.97	237.75	12.86
1	65	160	211.43	30.25	30.46	211.22	-6.04	244.94	63.20	70.56	237.58	35.82
1	65	161	-2.93	-272.07	-3.25	-271.74	9.38	-76.89	-1109.63	-77.01	-1109.50	11.38
1	65	162	-2.90	-199.39	-3.63	-198.65	-12.00	-58.32	-953.83	-58.59	-953.56	-15.55
1	65	163	-1.85	-393.25	-1.86	-393.24	-2.06	-105.75	-1369.15	-105.76	-1369.15	-2.52
1	65	164	-2.11	-368.98	-2.16	-368.92	4.48	-100.23	-1317.20	-100.25	-1317.18	5.13

M_G	Cmb	Nodo	N max	N min	N 1	N 2	N 1-2	M max	M min	M 1	M 2	M 1-2
1	65	165	12.86	-15.76	0.17	-3.08	14.22	-10.53	-536.01	-11.91	-534.63	26.90
1	65	166	-2.91	-272.36	-3.23	-272.04	-9.35	-76.73	-1110.22	-76.86	-1110.09	-11.37
1	65	167	-1.21	-110.43	-3.05	-108.59	14.05	-36.40	-762.76	-37.00	-762.16	20.81
1	65	168	-1.77	-401.24	-1.77	-401.24	0.10	-107.61	-1386.25	-107.61	-1386.25	-0.28
1	65	190	494.14	127.00	128.02	493.12	19.31	487.01	217.59	217.61	486.99	-2.34
1	65	191	172.73	-54.81	-54.80	172.73	0.94	298.28	165.52	206.67	257.14	-61.40
1	65	192	97.30	-6.18	-5.25	96.37	-9.78	74.05	-280.77	54.22	-260.95	-81.50
1	65	193	97.49	-6.19	-5.29	96.59	9.64	74.08	-280.32	54.17	-260.42	81.60
1	65	194	2.70	-322.87	2.60	-322.77	-5.63	13.88	-1223.80	13.27	-1223.19	-27.51
1	65	195	2.68	-322.74	2.58	-322.64	5.69	13.82	-1223.27	13.21	-1222.66	27.50
1	65	196	8.83	-20.96	-1.31e-02	-12.12	-13.61	51.83	-549.45	43.38	-541.00	-70.78
1	65	197	2.54	-197.45	2.02	-196.93	10.13	26.04	-952.72	23.79	-950.47	46.86
1	65	198	2.78	-385.83	2.77	-385.82	1.86	8.68	-1358.55	8.62	-1358.49	9.13
1	65	199	2.76	-362.22	2.72	-362.19	-3.63	10.59	-1308.19	10.34	-1307.93	-18.32
1	65	200	2.76	-113.07	1.42	-111.73	-12.40	36.32	-769.11	32.13	-764.92	-57.96
1	65	201	494.51	127.08	128.11	493.47	-19.45	487.24	217.55	217.57	487.22	2.33
1	65	202	172.98	-54.84	-54.84	172.97	-1.12	298.63	165.65	206.73	257.56	61.44
1	65	203	2.59	-267.82	2.37	-267.59	7.82	18.82	-1104.89	17.61	-1103.68	36.90
1	65	204	2.56	-197.70	2.05	-197.18	-10.12	26.11	-953.27	23.87	-951.02	-46.85
1	65	205	2.78	-385.88	2.78	-385.87	-1.75	8.70	-1358.76	8.64	-1358.70	-9.16
1	65	206	2.74	-362.13	2.70	-362.09	3.72	10.56	-1307.79	10.31	-1307.54	18.30
1	65	207	8.80	-20.71	-2.03e-02	-11.90	13.51	51.80	-548.85	43.32	-540.37	70.83
1	65	208	2.62	-267.98	2.39	-267.76	-7.80	18.90	-1105.47	17.69	-1104.26	-36.90
1	65	209	2.73	-112.80	1.40	-111.46	12.34	35.97	-768.51	31.77	-764.31	57.97
1	65	210	2.79	-393.76	2.79	-393.76	5.53e-02	8.07	-1375.55	8.07	-1375.55	-0.13
1	65	211	20.33	-333.38	-40.54	-272.52	-133.50	18.95	-141.22	-22.09	-100.19	-69.92
1	65	212	231.01	-1.67	11.44	217.89	53.67	265.82	-35.82	-30.46	260.46	39.85
1	65	213	-1.46	-391.66	-1.46	-391.66	3.87e-02	2.88	-1354.22	2.87	-1354.21	-3.13
1	65	214	93.38	10.06	12.10	91.34	12.88	19.94	-266.33	18.83	-265.22	17.78
1	65	215	94.17	10.09	12.14	92.13	-12.95	20.12	-267.92	18.89	-266.69	-18.74
1	65	216	3.33	-19.25	3.10	-19.02	2.27	3.08	-544.73	2.51	-544.17	17.56
1	65	217	-1.45	-367.32	-1.45	-367.32	7.29e-02	3.00	-1302.89	2.97	-1302.87	-5.94
1	65	218	-0.24	-117.36	-0.24	-117.36	0.44	2.60	-764.15	2.30	-763.85	15.28
1	65	219	-1.41	-327.09	-1.41	-327.09	8.83e-02	3.09	-1217.82	3.03	-1217.76	-8.55
1	65	220	-1.14	-201.55	-1.14	-201.55	2.00e-02	2.49	-949.86	2.32	-949.69	12.94
1	65	221	-1.34	-271.40	-1.34	-271.40	6.64e-02	2.92	-1099.63	2.81	-1099.52	-10.95
1	65	222	-1.37	-272.01	-1.37	-272.01	-7.64e-02	2.86	-1100.53	2.76	-1100.43	10.67
1	65	223	231.57	-1.58	11.49	218.50	-53.63	269.88	-36.13	-31.04	264.79	-39.14
1	65	224	-1.43	-327.59	-1.43	-327.59	-9.44e-02	3.06	-1218.49	3.01	-1218.43	8.27
1	65	225	-1.11	-200.93	-1.11	-200.93	-5.84e-02	2.56	-948.74	2.37	-948.56	-13.22
1	65	226	-1.46	-367.68	-1.46	-367.68	-7.95e-02	3.01	-1303.35	2.98	-1303.32	5.65
1	65	227	-0.19	-116.05	-0.19	-116.05	-0.37	2.61	-763.00	2.29	-762.68	-15.57
1	65	228	-1.47	-391.85	-1.47	-391.85	-4.62e-02	2.90	-1354.46	2.89	-1354.45	2.84
1	65	229	3.44	-17.91	3.19	-17.66	-2.30	2.95	-541.87	2.35	-541.27	-17.99
1	65	230	-1.47	-399.87	-1.47	-399.87	-3.98e-03	2.84	-1371.44	2.84	-1371.44	-0.16
1	65	231	20.33	-333.51	-40.56	-272.62	133.56	8.62	-135.18	-20.56	-106.00	57.83
1	65	232	229.22	-0.57	13.01	215.63	-54.20	264.21	-37.06	-32.10	259.25	-38.34
1	65	233	21.61	-337.77	-41.68	-274.48	136.89	12.54	-138.18	-16.31	-109.32	59.30
1	65	234	90.33	9.82	12.07	88.07	-13.29	19.92	-273.63	19.00	-272.71	-16.40
1	65	235	3.62	-19.93	3.32	-19.62	-2.67	2.93	-544.71	2.46	-544.24	-16.06
1	65	236	-4.84e-02	-116.02	-5.19e-02	-116.02	-0.63	2.63	-764.19	2.38	-763.95	-13.73
1	65	237	-0.91	-199.75	-0.91	-199.75	-0.30	3.39	-947.12	3.26	-946.99	-11.21
1	65	238	-1.10	-268.89	-1.10	-268.89	-0.20	3.40	-1098.68	3.33	-1098.61	-8.84
1	65	239	-1.14	-323.27	-1.14	-323.27	-0.13	3.39	-1216.61	3.35	-1216.57	-6.57
1	65	240	-1.15	-362.43	-1.15	-362.43	-7.74e-02	3.53	-1300.71	3.52	-1300.70	-4.35
1	65	241	-1.16	-386.04	-1.16	-386.04	-2.87e-02	3.69	-1351.11	3.68	-1351.11	-2.16
1	65	242	-1.16	-393.93	-1.16	-393.93	1.87e-02	3.74	-1367.84	3.74	-1367.84	-2.55e-02
1	65	243	-1.17	-386.05	-1.17	-386.05	6.43e-02	3.67	-1350.89	3.67	-1350.89	2.13
1	65	244	-1.17	-362.43	-1.17	-362.43	0.11	3.52	-1300.30	3.50	-1300.28	4.33
1	65	245	-1.17	-323.27	-1.17	-323.27	0.15	3.34	-1216.06	3.30	-1216.02	6.56
1	65	246	-1.13	-268.89	-1.13	-268.89	0.20	3.34	-1098.09	3.27	-1098.02	8.84
1	65	247	-0.94	-199.68	-0.94	-199.68	0.27	3.34	-946.56	3.21	-946.42	11.22
1	65	248	-8.97e-02	-116.59	-9.41e-02	-116.58	0.72	2.63	-763.57	2.38	-763.33	13.74
1	65	249	3.54	-20.46	3.24	-20.16	2.67	2.86	-546.00	2.38	-545.53	16.11
1	65	250	90.46	9.80	12.05	88.21	13.29	19.88	-273.08	18.95	-272.16	16.45
1	65	251	229.34	-0.63	12.96	215.75	54.23	264.98	-37.40	-32.09	259.66	39.73
1	65	252	21.58	-337.75	-41.66	-274.51	-136.83	12.37	-138.07	-16.53	-109.17	-59.27
1	85	43	498.06	127.99	129.10	496.96	-20.20	493.15	242.43	242.48	493.10	3.53
1	85	44	232.45	44.33	44.33	232.45	0.25	238.00	-8.87	-8.20	237.33	12.82
1	85	45	175.69	-54.91	-54.89	175.67	-2.17	302.86	175.33	218.14	260.06	60.22
1	85	46	212.42	30.01	30.39	212.04	-8.31	247.35	62.51	71.25	238.62	39.22
1	85	47	98.79	-5.97	-5.24	98.05	8.74	75.71	-278.45	56.19	-258.93	80.83
1	85	48	115.15	8.07	8.56	114.65	7.27	20.84	-260.84	16.12	-256.13	36.14
1	85	49	99.15	-6.01	-5.29	98.42	-8.72	74.75	-278.68	54.22	-258.16	-82.66
1	85	50	115.29	8.09	8.59	114.79	-7.33	18.53	-260.72	14.02	-256.21	-35.22

M_G	Cmb	Nodo	N max	N min	N 1	N 2	N 1-2	M max	M min	M 1	M 2	M 1-2
1	85	51	2.56	-324.17	2.48	-324.09	5.18	13.53	-1224.46	12.90	-1223.83	27.99
1	85	52	-2.62	-329.31	-2.73	-329.21	5.78	-90.66	-1231.70	-90.73	-1231.63	8.94
1	85	53	2.56	-324.11	2.48	-324.02	-5.21	13.52	-1224.29	12.86	-1223.63	-28.58
1	85	54	-2.63	-329.23	-2.74	-329.13	-5.85	-91.17	-1231.60	-91.25	-1231.52	-9.31
1	85	55	8.21	-19.38	-8.89e-02	-11.09	12.65	52.47	-547.92	43.92	-539.37	71.16
1	85	56	11.13	-13.70	0.10	-2.67	12.34	-7.73	-535.10	-9.25	-533.58	28.27
1	85	57	2.40	-197.93	1.96	-197.48	-9.44	25.80	-953.97	23.45	-951.62	-47.92
1	85	58	-3.15	-199.21	-3.71	-198.65	-10.48	-58.71	-954.17	-59.03	-953.85	-16.88
1	85	59	2.66	-387.86	2.65	-387.85	-1.66	7.94	-1360.14	7.87	-1360.07	-9.79
1	85	60	-1.96	-394.06	-1.97	-394.05	-1.86	-106.60	-1370.01	-106.61	-1370.00	-3.19
1	85	61	2.62	-363.94	2.59	-363.91	3.34	10.03	-1309.24	9.76	-1308.98	18.64
1	85	62	-2.22	-369.81	-2.25	-369.78	3.70	-100.59	-1318.20	-100.62	-1318.17	5.81
1	85	63	2.50	-112.65	1.33	-111.48	11.53	36.22	-768.98	31.96	-764.72	58.37
1	85	64	-1.70	-110.15	-3.11	-108.73	12.32	-34.36	-762.96	-35.02	-762.30	21.92
1	85	65	232.47	44.10	44.10	232.47	-0.16	238.89	-5.34	-4.68	238.23	-12.67
1	85	66	498.40	127.93	129.01	497.33	19.93	489.70	216.86	216.87	489.69	-1.76
1	85	67	175.95	-55.02	-55.00	175.93	2.18	301.17	166.16	207.16	260.17	-62.09
1	85	68	212.48	29.97	30.34	212.11	8.18	246.42	62.80	70.75	238.47	-37.38
1	85	69	2.48	-268.68	2.29	-268.49	-7.24	18.62	-1105.83	17.33	-1104.54	-38.02
1	85	70	-3.08	-272.40	-3.32	-272.15	-8.13	-77.17	-1110.32	-77.33	-1110.16	-12.76
1	85	71	2.39	-198.06	1.95	-197.62	9.39	25.80	-954.30	23.51	-952.01	47.33
1	85	72	-3.15	-199.35	-3.70	-198.80	10.42	-57.58	-954.29	-57.89	-953.98	16.64
1	85	73	2.66	-387.88	2.65	-387.88	1.63	7.95	-1360.19	7.89	-1360.13	9.22
1	85	74	-1.96	-394.08	-1.97	-394.07	1.79	-106.45	-1370.05	-106.46	-1370.04	2.79
1	85	75	2.62	-363.90	2.59	-363.87	-3.37	10.01	-1309.13	9.73	-1308.85	-19.22
1	85	76	-2.22	-369.76	-2.26	-369.72	-3.77	-100.90	-1318.13	-100.93	-1318.10	-6.20
1	85	77	8.33	-19.20	-7.55e-02	-10.80	-12.68	52.42	-547.30	43.71	-538.59	-71.76
1	85	78	11.27	-13.64	0.12	-2.49	-12.39	-9.82	-535.05	-11.32	-533.55	-28.05
1	85	79	2.47	-268.78	2.28	-268.59	7.20	18.63	-1106.07	17.38	-1104.83	37.42
1	85	80	-3.07	-272.51	-3.31	-272.26	8.06	-76.40	-1110.44	-76.55	-1110.29	12.43
1	85	81	2.52	-112.46	1.35	-111.28	-11.57	36.23	-768.52	31.89	-764.18	-58.94
1	85	82	-1.68	-109.99	-3.12	-108.55	-12.38	-35.96	-762.86	-36.62	-762.19	-22.01
1	85	83	2.67	-395.87	2.67	-395.87	-1.43e-02	7.26	-1377.18	7.26	-1377.18	-0.28
1	85	84	-1.88	-402.16	-1.88	-402.16	-3.09e-02	-108.43	-1387.31	-108.43	-1387.31	-0.20
1	85	106	232.46	46.24	46.24	232.46	3.04e-03	240.39	32.46	32.46	240.39	0.15
1	85	107	204.27	35.83	35.83	204.27	-8.97e-03	230.06	53.72	53.72	230.06	4.85e-03
1	85	108	112.26	16.14	16.14	112.26	-1.88e-02	-22.93	-262.79	-22.93	-262.79	0.10
1	85	109	112.35	16.15	16.15	112.35	-2.51e-02	-23.24	-262.80	-23.24	-262.80	8.90e-02
1	85	110	-4.56	-328.75	-4.56	-328.75	-2.13e-02	-131.94	-1237.19	-131.94	-1237.19	-0.10
1	85	111	-4.57	-328.68	-4.57	-328.68	-2.61e-02	-132.37	-1237.16	-132.37	-1237.16	-3.96e-02
1	85	112	2.02	-0.21	2.02	-0.21	-1.21e-02	-51.68	-537.60	-51.68	-537.60	0.12
1	85	113	-5.58	-196.64	-5.58	-196.64	-2.52e-02	-96.74	-957.38	-96.74	-957.38	1.89e-02
1	85	114	-3.51	-394.19	-3.51	-394.19	-2.68e-02	-151.56	-1376.73	-151.56	-1376.73	-9.11e-02
1	85	115	-3.91	-369.72	-3.91	-369.72	-2.43e-02	-144.03	-1324.46	-144.03	-1324.46	-0.12
1	85	116	-4.02	-105.83	-4.02	-105.83	-9.09e-03	-74.59	-765.17	-74.59	-765.17	5.98e-02
1	85	117	232.51	46.18	46.18	232.51	-1.76e-02	240.53	32.50	32.50	240.53	3.29e-02
1	85	118	204.35	35.80	35.80	204.35	-2.36e-02	230.14	53.60	53.60	230.14	9.85e-02
1	85	119	-5.31	-271.04	-5.31	-271.04	-2.56e-02	-116.20	-1114.79	-116.20	-1114.79	-1.05e-02
1	85	120	-5.58	-196.74	-5.58	-196.74	-1.19e-02	-96.09	-957.40	-96.09	-957.40	-1.22e-02
1	85	121	-3.51	-394.22	-3.51	-394.22	-2.60e-02	-151.42	-1376.75	-151.42	-1376.75	-0.12
1	85	122	-3.92	-369.67	-3.92	-369.67	-2.65e-02	-144.31	-1324.44	-144.31	-1324.44	-6.71e-02
1	85	123	2.04	-0.12	2.04	-0.12	-2.50e-02	-52.22	-537.62	-52.22	-537.62	7.07e-02
1	85	124	-5.30	-271.13	-5.30	-271.13	-1.68e-02	-115.65	-1114.82	-115.65	-1114.82	-6.91e-02
1	85	125	-4.01	-105.73	-4.01	-105.73	-2.49e-02	-75.24	-765.17	-75.24	-765.17	4.67e-02
1	85	126	-3.38	-402.36	-3.38	-402.36	-2.67e-02	-153.95	-1394.15	-153.95	-1394.15	-0.11
1	85	148	232.43	44.12	44.12	232.43	-0.16	238.86	-5.42	-4.76	238.20	-12.65
1	85	149	212.43	29.98	30.35	212.06	8.19	246.37	62.72	70.72	238.37	-37.50
1	85	150	115.22	8.09	8.59	114.72	-7.31	18.57	-260.85	14.03	-256.31	-35.32
1	85	151	115.28	8.10	8.59	114.78	7.28	18.49	-260.83	13.93	-256.27	35.39
1	85	152	-2.63	-329.33	-2.74	-329.22	-5.83	-91.26	-1231.76	-91.33	-1231.68	-9.26
1	85	153	-2.63	-329.28	-2.74	-329.18	5.81	-91.45	-1231.75	-91.53	-1231.67	9.21
1	85	154	11.22	-13.68	0.11	-2.57	-12.38	-9.78	-535.18	-11.29	-533.67	-28.11
1	85	155	-3.15	-199.25	-3.71	-198.69	10.44	-58.92	-954.30	-59.24	-953.98	16.90
1	85	156	-1.96	-394.11	-1.97	-394.10	1.81	-106.93	-1370.15	-106.93	-1370.15	2.99
1	85	157	-2.22	-369.85	-2.26	-369.81	-3.75	-101.06	-1318.29	-101.10	-1318.26	-6.12
1	85	158	-1.69	-110.08	-3.12	-108.65	-12.37	-35.92	-763.00	-36.59	-762.33	-22.04
1	85	159	232.48	44.11	44.11	232.48	0.14	238.91	-5.37	-4.70	238.25	12.73
1	85	160	212.49	29.97	30.35	212.12	-8.22	246.49	62.67	70.70	238.46	37.57
1	85	161	-3.08	-272.44	-3.32	-272.20	8.09	-77.42	-1110.46	-77.58	-1110.31	12.72
1	85	162	-3.16	-199.31	-3.72	-198.75	-10.46	-58.69	-954.31	-59.01	-954.00	-16.89
1	85	163	-1.96	-394.13	-1.97	-394.12	-1.84	-106.85	-1370.16	-106.86	-1370.15	-3.08
1	85	164	-2.22	-369.81	-2.26	-369.78	3.73	-101.21	-1318.28	-101.24	-1318.25	6.04
1	85	165	11.22	-13.61	0.12	-2.51	12.35	-9.93	-535.16	-11.45	-533.65	28.17
1	85	166	-3.08	-272.49	-3.32	-272.25	-8.11	-77.19	-1110.48	-77.35	-1110.32	-12.73
1	85	167	-1.69	-110.01	-3.11	-108.59	12.34	-36.12	-762.99	-36.80	-762.31	22.08

M_G	Cmb	Nodo	N max	N min	N 1	N 2	N 1-2	M max	M min	M 1	M 2	M 1-2
1	85	168	-1.88	-402.21	-1.88	-402.21	-1.32e-02	-108.79	-1387.44	-108.79	-1387.44	-4.68e-02
1	85	190	498.40	127.96	129.03	497.33	19.93	489.80	217.13	217.14	489.78	-1.79
1	85	191	175.92	-55.03	-55.01	175.90	2.19	301.24	166.13	207.27	260.10	-62.17
1	85	192	99.08	-6.01	-5.28	98.35	-8.72	74.79	-278.85	54.24	-258.30	-82.74
1	85	193	99.13	-6.01	-5.29	98.41	8.70	74.80	-278.83	54.23	-258.26	82.77
1	85	194	2.56	-324.22	2.48	-324.14	-5.20	13.35	-1224.52	12.69	-1223.86	-28.47
1	85	195	2.56	-324.20	2.48	-324.12	5.20	13.29	-1224.51	12.64	-1223.85	28.44
1	85	196	8.30	-19.25	-7.50e-02	-10.88	-12.67	52.39	-547.50	43.67	-538.78	-71.80
1	85	197	2.40	-198.00	1.96	-197.56	9.42	25.63	-954.18	23.28	-951.83	47.90
1	85	198	2.66	-387.96	2.65	-387.95	1.64	7.70	-1360.34	7.64	-1360.28	9.54
1	85	199	2.63	-364.02	2.59	-363.99	-3.36	9.82	-1309.35	9.54	-1309.08	-19.06
1	85	200	2.52	-112.55	1.35	-111.38	-11.56	36.15	-768.73	31.81	-764.39	-58.95
1	85	201	498.54	128.01	129.08	497.47	-19.94	489.84	217.18	217.19	489.82	1.81
1	85	202	175.98	-55.05	-55.03	175.96	-2.20	301.35	166.16	207.31	260.21	62.20
1	85	203	2.48	-268.77	2.29	-268.58	7.22	18.41	-1106.05	17.13	-1104.77	37.94
1	85	204	2.40	-198.03	1.96	-197.59	-9.43	25.69	-954.19	23.34	-951.85	-47.89
1	85	205	2.66	-387.97	2.65	-387.96	-1.65	7.73	-1360.35	7.66	-1360.28	-9.58
1	85	206	2.63	-364.00	2.59	-363.97	3.35	9.78	-1309.35	9.50	-1309.07	19.02
1	85	207	8.30	-19.21	-7.45e-02	-10.84	12.66	52.37	-547.47	43.64	-538.74	71.83
1	85	208	2.48	-268.80	2.29	-268.60	-7.23	18.48	-1106.06	17.19	-1104.78	-37.95
1	85	209	2.52	-112.51	1.35	-111.34	11.55	36.11	-768.71	31.76	-764.37	58.96
1	85	210	2.67	-395.96	2.67	-395.96	-2.97e-03	7.02	-1377.36	7.02	-1377.36	-2.50e-02
1	85	211	20.99	-335.47	-41.07	-273.41	-135.17	20.69	-142.47	-19.98	-101.81	-70.58
1	85	212	229.94	-1.15	12.22	216.57	53.95	262.95	-36.05	-30.95	257.85	38.73
1	85	213	-1.32	-388.83	-1.32	-388.83	-1.85e-03	3.28	-1352.56	3.28	-1352.56	-2.69
1	85	214	91.69	9.94	12.08	89.55	13.07	19.85	-268.81	18.89	-267.86	16.58
1	85	215	92.24	9.95	12.09	90.09	-13.11	19.99	-270.62	18.92	-269.55	-17.58
1	85	216	3.47	-19.61	3.21	-19.35	2.47	3.06	-544.65	2.56	-544.14	16.64
1	85	217	-1.31	-364.89	-1.31	-364.89	-7.97e-03	3.26	-1301.68	3.24	-1301.66	-5.18
1	85	218	-0.14	-116.62	-0.14	-116.62	0.54	2.62	-764.06	2.35	-763.79	14.37
1	85	219	-1.29	-325.23	-1.29	-325.23	-2.41e-02	3.22	-1217.08	3.17	-1217.04	-7.59
1	85	220	-1.02	-200.53	-1.02	-200.53	0.17	2.94	-948.29	2.79	-948.14	11.95
1	85	221	-1.23	-270.22	-1.23	-270.22	-6.27e-02	3.13	-1099.05	3.04	-1098.96	-9.92
1	85	222	-1.23	-270.31	-1.23	-270.31	6.35e-02	3.12	-1099.35	3.04	-1099.27	9.63
1	85	223	230.40	-1.10	12.23	217.08	-53.92	267.32	-36.78	-31.58	262.12	-39.42
1	85	224	-1.29	-325.29	-1.29	-325.29	2.48e-02	3.21	-1217.29	3.17	-1217.25	7.31
1	85	225	-1.03	-200.39	-1.03	-200.39	-0.16	2.95	-947.86	2.79	-947.70	-12.23
1	85	226	-1.31	-364.93	-1.31	-364.93	8.47e-03	3.26	-1301.81	3.24	-1301.79	4.90
1	85	227	-0.14	-116.41	-0.14	-116.41	-0.54	2.61	-763.48	2.33	-763.20	-14.65
1	85	228	-1.32	-388.85	-1.32	-388.85	2.30e-03	3.28	-1352.63	3.28	-1352.62	2.41
1	85	229	3.49	-19.27	3.21	-19.00	-2.48	2.91	-544.10	2.38	-543.57	-17.02
1	85	230	-1.32	-396.84	-1.32	-396.84	2.12e-04	3.29	-1369.56	3.29	-1369.56	-0.14
1	85	231	20.94	-335.62	-41.12	-273.56	135.19	10.52	-136.65	-18.49	-107.64	58.55
1	85	232	230.37	-1.10	12.23	217.04	-53.92	267.25	-36.78	-31.57	262.04	-39.44
1	85	233	20.95	-335.61	-41.12	-273.54	135.20	10.54	-136.68	-18.51	-107.62	58.59
1	85	234	92.18	9.95	12.09	90.03	-13.11	20.00	-270.78	18.93	-269.71	-17.60
1	85	235	3.49	-19.35	3.21	-19.08	-2.48	2.91	-544.29	2.38	-543.76	-17.03
1	85	236	-0.14	-116.50	-0.14	-116.50	-0.54	2.61	-763.69	2.33	-763.41	-14.64
1	85	237	-1.03	-200.50	-1.03	-200.50	-0.16	2.95	-948.08	2.79	-947.92	-12.21
1	85	238	-1.23	-270.34	-1.23	-270.34	-6.24e-02	3.13	-1099.27	3.04	-1099.18	-9.87
1	85	239	-1.29	-325.36	-1.29	-325.36	-2.39e-02	3.22	-1217.30	3.18	-1217.26	-7.53
1	85	240	-1.31	-365.02	-1.31	-365.02	-7.85e-03	3.27	-1301.89	3.25	-1301.87	-5.10
1	85	241	-1.32	-388.96	-1.32	-388.96	-1.86e-03	3.29	-1352.75	3.28	-1352.74	-2.58
1	85	242	-1.32	-396.96	-1.32	-396.96	7.41e-05	3.29	-1369.72	3.29	-1369.72	-9.15e-03
1	85	243	-1.32	-388.96	-1.32	-388.96	2.01e-03	3.28	-1352.74	3.28	-1352.74	2.57
1	85	244	-1.31	-365.01	-1.31	-365.01	8.01e-03	3.26	-1301.87	3.25	-1301.85	5.09
1	85	245	-1.29	-325.35	-1.29	-325.35	2.41e-02	3.22	-1217.29	3.17	-1217.24	7.52
1	85	246	-1.23	-270.32	-1.23	-270.32	6.25e-02	3.13	-1099.25	3.04	-1099.16	9.87
1	85	247	-1.03	-200.48	-1.03	-200.48	0.16	2.95	-948.06	2.79	-947.90	12.21
1	85	248	-0.14	-116.48	-0.14	-116.48	0.54	2.61	-763.67	2.33	-763.39	14.65
1	85	249	3.49	-19.32	3.21	-19.04	2.48	2.91	-544.26	2.38	-543.73	17.04
1	85	250	92.23	9.95	12.10	90.08	13.11	20.00	-270.73	18.93	-269.66	17.61
1	85	251	230.43	-1.10	12.23	217.10	53.93	267.36	-36.79	-31.58	262.15	39.46
1	85	252	20.95	-335.70	-41.13	-273.62	-135.22	10.55	-136.67	-18.50	-107.61	-58.60
1	87	43	1267.64	339.22	342.67	1264.20	-56.44	1051.45	539.62	541.10	1049.98	-27.46
1	87	44	581.66	110.78	110.97	581.47	-9.43	505.60	-52.40	-51.76	504.96	18.87
1	87	45	477.48	-135.87	-135.71	477.32	-9.98	871.43	449.65	535.32	785.76	169.68
1	87	46	569.14	75.05	76.32	567.87	-24.98	766.30	189.57	216.84	739.04	122.39
1	87	47	340.59	-15.55	-14.68	339.72	17.55	237.92	-418.12	152.60	-332.81	220.67
1	87	48	386.33	21.95	22.42	385.86	13.00	160.64	-342.04	134.09	-315.49	112.43
1	87	49	197.36	-16.37	-13.30	194.30	-25.42	270.36	-708.54	158.73	-596.92	-311.14
1	87	50	240.87	20.24	22.95	238.17	-24.27	207.71	-609.02	157.98	-559.29	-195.30
1	87	51	3.66	-637.99	3.10	-637.43	18.97	38.28	-2561.66	30.11	-2553.49	145.52
1	87	52	-1.56	-652.61	-2.26	-651.90	21.43	12.65	-2555.91	9.66	-2552.91	87.65
1	87	53	12.17	-944.29	12.03	-944.15	-11.63	-164.49	-3420.05	-166.60	-3417.94	-82.84

M_G	Cmb	Nodo	N max	N min	N 1	N 2	N 1-2	M max	M min	M 1	M 2	M 1-2
1	87	54	-13.16	-951.55	-13.38	-951.33	-14.30	-279.90	-3326.56	-280.83	-3325.63	-53.40
1	87	55	121.65	-9.14	-2.65	115.16	28.41	162.34	-956.95	124.98	-919.58	201.07
1	87	56	145.55	-2.71	2.27	140.57	26.70	120.56	-902.81	111.72	-893.97	94.69
1	87	57	5.73	-583.37	4.44	-582.09	-27.50	-30.06	-2465.30	-46.32	-2449.03	-198.36
1	87	58	-9.75	-584.94	-11.61	-583.08	-32.64	-13.68	-2394.80	-25.03	-2383.45	-164.02
1	87	59	10.12	-1029.48	10.11	-1029.46	4.35	-155.08	-3582.70	-155.69	-3582.09	45.70
1	87	60	-9.36	-1041.64	-9.39	-1041.62	5.06	-246.32	-3513.68	-248.94	-3511.06	92.57
1	87	61	3.66	-772.59	3.29	-772.23	16.80	5.86	-2849.62	-0.54	-2843.23	135.01
1	87	62	-1.44	-789.93	-1.94	-789.43	19.77	-7.34	-2840.93	-10.82	-2837.45	99.22
1	87	63	7.41	-110.05	0.61	-103.25	27.42	118.37	-1428.82	97.35	-1407.80	179.08
1	87	64	3.57	-101.51	-4.87	-93.08	28.55	85.79	-1394.50	81.02	-1389.73	83.92
1	87	65	521.22	115.59	115.63	521.18	4.10	507.27	-116.34	-116.30	507.23	-5.23
1	87	66	1100.79	283.83	287.11	1097.51	51.66	1144.82	790.64	798.82	1136.64	53.21
1	87	67	382.92	-122.45	-122.44	382.91	2.62	870.15	340.45	594.27	616.34	-264.62
1	87	68	471.81	76.44	76.99	471.26	14.67	658.61	101.86	201.08	559.39	-213.06
1	87	69	9.68	-792.69	9.18	-792.19	-20.02	-133.45	-3072.78	-140.79	-3065.44	-146.70
1	87	70	-12.29	-798.51	-13.01	-797.79	-23.86	-186.59	-2985.53	-192.31	-2979.81	-126.39
1	87	71	3.94	-304.57	2.01	-302.65	24.31	89.72	-1851.89	75.72	-1837.89	164.28
1	87	72	-3.20	-306.08	-5.50	-303.78	26.33	55.30	-1833.01	51.98	-1829.68	79.20
1	87	73	4.03	-885.83	3.81	-885.60	14.15	-32.79	-3096.01	-37.38	-3091.42	118.54
1	87	74	-3.23	-902.75	-3.56	-902.41	17.41	-42.30	-3077.29	-46.52	-3073.07	113.08
1	87	75	12.33	-1023.43	12.32	-1023.42	-3.11	-171.24	-3590.40	-171.31	-3590.33	-15.74
1	87	76	-12.12	-1032.52	-12.13	-1032.50	-3.35	-299.53	-3502.78	-299.70	-3502.61	23.00
1	87	77	12.04	-89.36	-2.55	-74.76	-35.59	135.78	-1342.05	81.66	-1287.94	-277.57
1	87	78	21.47	-72.46	1.76	-52.75	-38.25	162.85	-1255.63	140.55	-1233.33	-176.45
1	87	79	3.68	-481.83	2.73	-480.89	21.37	65.07	-2229.35	54.67	-2218.95	154.12
1	87	80	-2.73	-491.18	-3.87	-490.04	23.57	31.39	-2220.09	28.50	-2217.20	80.67
1	87	81	4.02	-341.13	0.77	-337.87	-33.35	40.20	-1917.99	10.66	-1888.44	-238.72
1	87	82	-3.01	-334.99	-7.70	-330.30	-39.18	96.27	-1844.90	81.45	-1830.07	-168.99
1	87	83	6.30	-975.91	6.19	-975.81	10.14	-71.75	-3311.32	-74.31	-3308.76	91.05
1	87	84	-6.26	-990.59	-6.40	-990.44	12.00	-114.22	-3274.52	-118.96	-3269.79	122.24
1	87	106	587.74	115.46	115.46	587.74	0.11	511.16	32.51	32.52	511.15	-2.56
1	87	107	551.81	89.95	89.95	551.81	0.30	723.81	187.95	188.17	723.60	-10.78
1	87	108	380.80	41.54	41.54	380.80	0.26	71.45	-326.64	71.20	-326.40	-9.88
1	87	109	231.80	43.06	43.06	231.80	0.16	154.93	-563.49	154.92	-563.48	3.66
1	87	110	-3.06	-656.37	-3.06	-656.37	0.20	52.18	-2558.84	52.18	-2558.84	0.96
1	87	111	-28.43	-933.80	-28.43	-933.80	0.20	892.96	-2989.10	892.96	-2989.10	2.96
1	87	112	146.08	7.90	7.90	146.08	0.19	56.74	-898.83	56.68	-898.77	-7.51
1	87	113	-15.15	-579.71	-15.15	-579.71	0.21	531.37	-2297.25	531.37	-2297.25	3.32
1	87	114	-19.14	-1032.80	-19.14	-1032.80	0.20	707.02	-3226.88	707.02	-3226.88	2.58
1	87	115	-1.18	-796.95	-1.18	-796.95	0.21	109.83	-2837.70	109.83	-2837.70	1.59
1	87	116	-5.62	-87.56	-5.62	-87.56	8.26e-02	46.71	-1392.12	46.70	-1392.11	-4.00
1	87	117	523.68	125.87	125.87	523.68	0.16	520.38	-25.21	-25.21	520.38	0.53
1	87	118	455.38	92.76	92.76	455.38	0.11	544.26	196.17	196.21	544.22	3.66
1	87	119	-24.21	-785.43	-24.21	-785.43	0.21	773.09	-2688.16	773.09	-2688.16	3.14
1	87	120	-8.00	-301.34	-8.00	-301.34	8.73e-02	35.21	-1833.62	35.20	-1833.62	-1.36
1	87	121	-1.89	-911.28	-1.89	-911.28	0.21	227.84	-3053.70	227.84	-3053.70	2.03
1	87	122	-26.64	-1016.08	-26.64	-1016.08	0.20	870.07	-3168.59	870.07	-3168.59	2.78
1	87	123	9.65	-51.24	9.64	-51.24	0.19	228.60	-1222.86	228.59	-1222.85	3.62
1	87	124	-5.95	-491.12	-5.95	-491.12	0.16	32.78	-2223.11	32.78	-2223.11	4.09e-02
1	87	125	-5.58	-329.86	-5.58	-329.86	0.21	348.09	-1796.66	348.09	-1796.66	3.49
1	87	126	-8.36	-993.58	-8.36	-993.58	0.20	430.53	-3195.50	430.53	-3195.50	2.35
1	87	148	582.11	110.68	110.86	581.93	9.27	508.37	-52.06	-51.05	507.37	-23.75
1	87	149	569.49	74.90	76.24	568.14	25.76	773.82	176.61	212.19	738.25	-141.36
1	87	150	385.37	21.84	22.28	384.93	-12.61	158.75	-356.32	123.77	-321.35	-129.58
1	87	151	241.12	20.12	22.88	238.36	24.54	213.18	-612.50	159.74	-559.06	203.16
1	87	152	-1.60	-653.25	-2.28	-652.56	-21.14	1.99	-2560.59	-0.96	-2557.64	-86.82
1	87	153	-13.15	-951.39	-13.38	-951.16	14.62	-282.05	-3327.84	-283.18	-3326.71	58.66
1	87	154	143.40	-2.65	2.32	138.43	-26.47	106.75	-918.62	95.24	-907.11	-108.01
1	87	155	-9.70	-584.87	-11.60	-582.97	32.97	-13.01	-2396.31	-25.20	-2384.12	170.06
1	87	156	-9.38	-1041.50	-9.40	-1041.48	-4.75	-251.14	-3515.11	-253.52	-3512.73	-88.10
1	87	157	-1.48	-790.23	-1.96	-789.75	-19.46	-16.25	-2844.38	-19.58	-2841.05	-96.99
1	87	158	3.42	-103.68	-4.75	-95.51	-28.43	68.54	-1409.51	62.78	-1403.75	-92.06
1	87	159	521.55	115.73	115.76	521.52	-3.72	506.81	-119.50	-119.44	506.75	6.12
1	87	160	472.09	76.46	76.99	471.55	-14.57	665.90	95.49	201.45	559.95	221.83
1	87	161	-12.26	-798.39	-13.00	-797.65	24.18	-187.32	-2986.92	-193.56	-2980.68	132.03
1	87	162	-3.17	-307.91	-5.43	-305.64	-26.19	40.26	-1841.92	36.58	-1838.25	-83.11
1	87	163	-3.26	-902.82	-3.59	-902.50	-17.09	-49.72	-3079.82	-53.71	-3075.83	-109.86
1	87	164	-12.12	-1032.35	-12.13	-1032.33	3.67	-303.03	-3504.05	-303.13	-3503.95	-18.11
1	87	165	21.73	-72.65	1.72	-52.64	38.58	166.28	-1257.52	142.21	-1233.45	183.56
1	87	166	-2.75	-492.32	-3.86	-491.20	-23.34	18.67	-2226.46	15.68	-2223.47	-81.82
1	87	167	-2.94	-334.99	-7.71	-330.22	39.52	98.29	-1846.47	82.32	-1830.50	175.52
1	87	168	-6.28	-990.52	-6.42	-990.39	-11.68	-120.33	-3276.37	-124.77	-3271.93	-118.31
1	87	190	1274.10	341.85	345.24	1270.71	56.10	1057.39	548.36	550.38	1055.37	31.97
1	87	191	477.39	-137.38	-137.22	477.22	10.05	886.90	439.57	538.39	788.08	-185.58

M_G	Cmb	Nodo	N max	N min	N 1	N 2	N 1-2	M max	M min	M 1	M 2	M 1-2
1	87	192	338.43	-15.74	-14.86	337.54	-17.66	247.62	-435.55	152.86	-340.78	-236.14
1	87	193	197.51	-16.41	-13.31	194.41	25.58	278.99	-712.92	163.52	-597.45	318.12
1	87	194	3.62	-639.41	3.07	-638.85	-18.89	30.23	-2568.51	22.01	-2560.29	-145.88
1	87	195	12.16	-943.96	12.02	-943.81	11.75	-166.44	-3421.89	-168.79	-3419.54	87.39
1	87	196	118.23	-9.11	-2.44	111.56	-28.37	160.72	-977.23	119.72	-936.23	-212.08
1	87	197	5.74	-583.14	4.44	-581.85	27.61	-29.67	-2467.49	-46.81	-2450.36	203.65
1	87	198	10.10	-1029.26	10.08	-1029.24	-4.24	-159.06	-3584.93	-159.57	-3584.41	-42.06
1	87	199	3.62	-773.34	3.26	-772.98	-16.70	-1.30	-2854.67	-7.60	-2848.37	-133.92
1	87	200	7.39	-113.80	0.85	-107.26	-27.37	111.45	-1448.34	88.78	-1425.67	-186.67
1	87	201	1101.50	283.99	287.28	1098.21	-51.74	1149.15	810.04	819.72	1139.47	-56.46
1	87	202	383.16	-122.57	-122.55	383.15	-2.52	882.94	339.56	604.31	618.18	271.60
1	87	203	9.68	-792.39	9.18	-791.89	20.13	-134.33	-3074.71	-142.17	-3066.87	151.62
1	87	204	4.02	-307.88	2.12	-305.98	-24.25	81.91	-1864.49	67.15	-1849.72	-168.90
1	87	205	3.99	-886.10	3.77	-885.88	-14.04	-38.89	-3099.74	-43.32	-3095.31	-116.36
1	87	206	12.31	-1023.11	12.30	-1023.10	3.23	-174.20	-3592.33	-174.31	-3592.22	19.87
1	87	207	12.16	-89.37	-2.55	-74.66	35.74	140.33	-1345.35	83.94	-1288.97	283.88
1	87	208	3.68	-484.13	2.74	-483.20	-21.30	56.60	-2238.61	45.90	-2227.91	-156.36
1	87	209	4.05	-340.99	0.77	-337.71	33.48	42.25	-1920.60	11.31	-1889.66	244.46
1	87	210	6.26	-975.88	6.16	-975.77	-10.02	-76.77	-3314.12	-79.17	-3311.73	-88.05
1	87	211	35.48	-852.97	-106.59	-710.91	-325.63	40.07	-235.86	-9.39	-186.40	-105.84
1	87	212	598.76	-0.28	29.50	568.99	130.19	787.36	-96.25	-82.66	773.78	108.72
1	87	213	-4.26	-1037.24	-4.29	-1037.21	5.06	19.83	-3511.80	19.81	-3511.78	8.64
1	87	214	323.06	26.05	29.61	319.49	32.34	49.25	-379.22	41.33	-371.30	57.71
1	87	215	178.22	22.64	27.64	173.22	-27.44	49.03	-648.32	40.73	-640.02	-75.63
1	87	216	97.02	8.17	8.76	96.43	7.24	6.13	-948.26	2.50	-944.64	58.73
1	87	217	-4.94	-1035.00	-4.95	-1035.00	2.07	13.98	-3517.67	13.97	-3517.66	-5.04
1	87	218	0.95	-113.96	0.89	-113.89	2.67	4.63	-1420.64	2.45	-1418.46	55.69
1	87	219	-4.90	-956.12	-4.90	-956.12	0.69	13.84	-3346.81	13.70	-3346.67	-21.60
1	87	220	-1.16	-307.39	-1.17	-307.38	1.78	5.30	-1842.40	3.79	-1840.89	52.80
1	87	221	-4.09	-801.66	-4.09	-801.66	-2.38	19.31	-3000.20	18.89	-2999.79	-35.52
1	87	222	-1.65	-482.13	-1.65	-482.12	1.53	5.78	-2218.05	4.65	-2216.92	50.20
1	87	223	497.68	-1.75	27.90	468.03	-118.02	622.54	-91.16	-69.77	601.14	-121.71
1	87	224	-1.80	-636.66	-1.80	-636.66	1.45	6.03	-2548.30	5.17	-2547.43	47.04
1	87	225	-3.00	-588.03	-3.01	-588.02	-2.60	-1.09	-2440.45	-2.11	-2439.43	-49.83
1	87	226	-2.04	-770.31	-2.05	-770.31	1.51	6.11	-2834.00	5.48	-2833.37	42.38
1	87	227	-0.20	-346.27	-0.20	-346.27	-0.53	4.16	-1893.98	2.00	-1891.81	-64.13
1	87	228	-2.77	-883.35	-2.78	-883.35	2.17	5.84	-3077.70	5.44	-3077.30	34.98
1	87	229	8.05	-92.27	7.88	-92.10	-4.12	5.91	-1315.28	1.81	-1311.18	-73.46
1	87	230	-3.64	-977.02	-3.66	-977.00	5.07	-6.54e-02	-3289.89	-0.22	-3289.74	22.23
1	87	231	53.68	-742.24	-88.67	-599.89	305.02	-11.25	-264.20	-44.56	-230.89	85.53
1	87	232	599.35	-0.88	29.53	568.93	-131.64	794.17	-97.80	-83.04	779.41	-113.78
1	87	233	34.14	-859.09	-106.83	-718.12	325.65	28.26	-228.45	-8.62	-191.57	90.04
1	87	234	320.55	26.12	29.73	316.94	-32.41	50.51	-392.14	41.48	-383.11	-62.57
1	87	235	92.58	8.11	8.75	91.94	-7.32	6.57	-964.39	2.54	-960.36	-62.44
1	87	236	0.91	-118.88	0.85	-118.83	-2.57	5.07	-1436.93	2.68	-1434.54	-58.69
1	87	237	-1.20	-311.39	-1.21	-311.39	-1.67	5.11	-1853.71	3.49	-1852.09	-54.98
1	87	238	-1.66	-484.87	-1.67	-484.87	-1.51	5.76	-2226.35	4.57	-2225.17	-51.47
1	87	239	-1.80	-638.36	-1.80	-638.36	-1.45	6.02	-2554.41	5.14	-2553.52	-47.55
1	87	240	-2.03	-771.21	-2.03	-771.21	-1.52	6.11	-2838.47	5.48	-2837.85	-42.24
1	87	241	-2.76	-883.68	-2.77	-883.68	-2.18	5.85	-3080.98	5.46	-3080.60	-34.29
1	87	242	-3.63	-976.97	-3.66	-976.95	-5.07	-5.43e-02	-3292.34	-0.19	-3292.21	-21.10
1	87	243	-4.25	-1036.96	-4.28	-1036.93	-5.07	19.85	-3513.71	19.83	-3513.69	-7.15
1	87	244	-4.94	-1034.61	-4.94	-1034.60	-2.07	14.00	-3519.25	13.99	-3519.24	6.82
1	87	245	-4.89	-955.70	-4.89	-955.70	-0.69	13.87	-3348.24	13.70	-3348.07	23.60
1	87	246	-4.08	-801.28	-4.09	-801.27	2.37	19.35	-3001.61	18.88	-3001.14	37.69
1	87	247	-3.00	-587.73	-3.01	-587.72	2.60	-1.04	-2441.93	-2.15	-2440.82	52.11
1	87	248	-0.20	-346.07	-0.20	-346.06	0.53	4.25	-1895.64	1.92	-1893.31	66.48
1	87	249	8.05	-92.18	7.88	-92.01	4.12	6.08	-1317.13	1.72	-1312.77	75.83
1	87	250	178.23	22.65	27.65	173.22	27.46	49.59	-650.21	40.81	-641.42	77.93
1	87	251	497.79	-1.80	27.91	468.08	118.14	623.99	-91.70	-69.56	601.85	123.94
1	87	252	53.78	-742.71	-88.72	-600.22	-305.27	-12.83	-261.61	-44.89	-229.56	-83.35
1	97	43	1209.06	322.86	326.12	1205.80	-53.61	1013.70	520.41	521.62	1012.50	-24.37
1	97	44	555.30	105.83	105.98	555.14	-8.43	487.51	-48.78	-48.12	486.85	18.76
1	97	45	453.79	-129.79	-129.65	453.64	-9.27	826.28	430.25	513.29	743.24	161.22
1	97	46	541.31	71.67	72.86	540.12	-23.63	723.57	179.15	204.87	697.85	115.51
1	97	47	320.04	-14.79	-13.93	319.17	17.00	225.54	-413.20	146.90	-334.56	209.88
1	97	48	363.45	20.88	21.35	362.98	12.70	147.28	-343.04	123.11	-318.87	106.15
1	97	49	191.18	-15.54	-12.70	188.33	-24.08	254.95	-674.90	152.22	-572.17	-291.49
1	97	50	232.55	19.35	21.83	230.08	-22.83	189.25	-583.15	144.39	-538.29	-180.65
1	97	51	3.63	-618.55	3.13	-618.04	17.78	38.04	-2472.48	30.78	-2465.22	134.83
1	97	52	-1.77	-632.41	-2.41	-631.77	20.08	-0.55	-2468.63	-3.16	-2466.03	80.13
1	97	53	11.30	-894.21	11.17	-894.07	-11.18	-144.28	-3245.19	-146.26	-3243.20	-78.48
1	97	54	-12.21	-901.45	-12.42	-901.24	-13.67	-263.83	-3162.30	-264.67	-3161.46	-49.33
1	97	55	108.83	-9.10	-2.39	102.13	27.30	154.87	-935.51	120.39	-901.03	190.82
1	97	56	131.28	-3.07	2.05	126.16	25.72	107.72	-885.52	99.66	-877.46	89.12

M_G	Cmb	Nodo	N max	N min	N 1	N 2	N 1-2	M max	M min	M 1	M 2	M 1-2
1	97	57	5.49	-552.12	4.27	-550.90	-26.04	-21.76	-2348.79	-36.58	-2333.97	-185.12
1	97	58	-9.21	-553.70	-10.96	-551.95	-30.81	-20.10	-2285.47	-30.07	-2275.50	-149.94
1	97	59	9.47	-979.61	9.46	-979.59	3.69	-136.64	-3410.09	-137.12	-3409.61	39.80
1	97	60	-8.70	-991.40	-8.72	-991.38	4.31	-235.85	-3349.51	-238.06	-3347.30	82.88
1	97	61	3.64	-745.13	3.32	-744.81	15.58	8.38	-2743.24	2.77	-2737.64	124.09
1	97	62	-1.61	-761.54	-2.05	-761.10	18.30	-19.94	-2736.95	-22.93	-2733.96	90.11
1	97	63	6.73	-114.18	0.73	-108.18	26.26	113.18	-1390.57	93.89	-1371.27	169.24
1	97	64	2.60	-106.05	-4.81	-98.64	27.39	72.91	-1359.26	68.59	-1354.94	78.55
1	97	65	500.92	110.12	110.15	500.88	3.64	489.06	-105.92	-105.85	488.99	-6.47
1	97	66	1058.94	273.01	276.11	1055.83	49.28	1096.74	744.43	751.02	1090.15	47.72
1	97	67	368.72	-117.73	-117.72	368.70	2.64	825.20	330.83	565.26	590.78	-246.85
1	97	68	453.73	72.92	73.46	453.19	14.34	625.37	101.43	190.64	536.16	-196.93
1	97	69	9.05	-750.19	8.58	-749.71	-19.01	-115.69	-2916.40	-122.43	-2909.66	-137.26
1	97	70	-11.48	-755.94	-12.17	-755.25	-22.59	-178.08	-2838.64	-183.10	-2833.62	-115.50
1	97	71	3.84	-301.19	2.08	-299.42	23.16	86.01	-1796.72	73.27	-1783.98	154.38
1	97	72	-3.34	-302.72	-5.46	-300.60	25.13	42.35	-1780.10	39.38	-1777.12	73.58
1	97	73	3.99	-850.32	3.79	-850.12	12.96	-26.68	-2971.97	-30.64	-2968.01	107.97
1	97	74	-3.18	-866.39	-3.48	-866.10	15.92	-52.26	-2956.71	-55.86	-2953.11	102.17
1	97	75	11.45	-970.88	11.44	-970.87	-3.26	-150.84	-3410.10	-150.93	-3410.02	-16.79
1	97	76	-11.21	-979.86	-11.22	-979.85	-3.53	-282.84	-3332.73	-282.96	-3332.60	19.86
1	97	77	11.84	-82.91	-2.31	-68.76	-33.77	130.86	-1281.95	81.38	-1232.47	-259.73
1	97	78	20.66	-66.86	1.60	-47.80	-36.12	145.31	-1202.80	125.38	-1182.87	-162.69
1	97	79	3.64	-470.41	2.77	-469.55	20.21	62.85	-2157.21	53.49	-2147.85	143.87
1	97	80	-2.89	-479.34	-3.94	-478.29	22.32	18.28	-2149.83	15.73	-2147.28	74.32
1	97	81	3.96	-322.41	0.87	-319.32	-31.60	42.77	-1830.72	15.85	-1803.79	-222.97
1	97	82	-2.94	-316.54	-7.36	-312.12	-36.96	81.93	-1764.36	68.80	-1751.23	-155.13
1	97	83	6.03	-932.49	5.94	-932.40	9.12	-61.80	-3168.11	-63.96	-3165.95	81.92
1	97	84	-5.89	-946.56	-6.02	-946.44	10.79	-117.31	-3136.54	-121.32	-3132.53	110.00
1	97	106	560.78	110.26	110.26	560.78	9.56e-02	492.96	33.77	33.79	492.95	-2.31
1	97	107	524.58	85.88	85.88	524.58	0.27	682.89	176.37	176.55	682.70	-9.74
1	97	108	358.09	39.60	39.60	358.09	0.23	60.89	-329.95	60.68	-329.75	-8.92
1	97	109	224.00	40.97	40.97	224.00	0.14	135.98	-543.13	135.96	-543.12	3.32
1	97	110	-3.38	-635.73	-3.38	-635.73	0.18	28.78	-2472.27	28.78	-2472.27	0.85
1	97	111	-26.22	-885.40	-26.22	-885.40	0.18	785.40	-2859.49	785.40	-2859.49	2.67
1	97	112	131.45	7.39	7.39	131.45	0.17	43.73	-882.53	43.68	-882.48	-6.79
1	97	113	-14.40	-548.64	-14.40	-548.64	0.19	464.78	-2198.55	464.77	-2198.54	3.01
1	97	114	-17.70	-983.46	-17.70	-983.46	0.18	615.45	-3092.60	615.45	-3092.60	2.33
1	97	115	-1.59	-767.85	-1.59	-767.85	0.19	79.02	-2735.19	79.02	-2735.19	1.43
1	97	116	-5.61	-93.28	-5.61	-93.28	7.40e-02	31.62	-1357.63	31.61	-1357.62	-3.63
1	97	117	503.13	119.62	119.62	503.13	0.14	501.28	-18.16	-18.16	501.28	0.49
1	97	118	437.81	88.40	88.40	437.81	9.68e-02	521.31	183.73	183.77	521.28	3.33
1	97	119	-22.51	-743.97	-22.51	-743.97	0.18	679.70	-2571.90	679.70	-2571.90	2.84
1	97	120	-7.97	-298.12	-7.97	-298.12	7.83e-02	18.36	-1781.28	18.36	-1781.28	-1.25
1	97	121	-2.18	-874.10	-2.18	-874.10	0.19	184.22	-2936.74	184.22	-2936.73	1.83
1	97	122	-24.51	-965.06	-24.51	-965.06	0.18	763.18	-3032.98	763.18	-3032.98	2.51
1	97	123	8.96	-46.12	8.96	-46.12	0.17	198.30	-1174.16	198.29	-1174.15	3.29
1	97	124	-6.08	-479.11	-6.08	-479.11	0.15	13.54	-2153.36	13.54	-2153.36	1.87e-02
1	97	125	-5.57	-311.33	-5.57	-311.33	0.19	302.73	-1721.71	302.72	-1721.71	3.17
1	97	126	-7.99	-949.28	-7.99	-949.28	0.18	366.30	-3066.74	366.29	-3066.74	2.11
1	97	148	555.71	105.74	105.89	555.56	8.28	490.01	-48.52	-47.53	489.01	-23.16
1	97	149	541.63	71.54	72.80	540.36	24.33	730.37	167.46	200.69	697.14	-132.66
1	97	150	362.59	20.78	21.22	362.15	-12.34	145.36	-355.67	113.84	-324.14	-121.66
1	97	151	232.78	19.24	21.77	230.26	23.09	194.14	-586.25	145.98	-538.08	187.79
1	97	152	-1.80	-632.99	-2.43	-632.36	-19.82	-10.17	-2472.87	-12.73	-2470.30	-79.41
1	97	153	-12.20	-901.31	-12.41	-901.09	13.95	-265.80	-3163.46	-266.81	-3162.45	54.09
1	97	154	129.35	-3.02	2.10	124.23	-25.51	95.24	-899.69	84.84	-889.29	-101.17
1	97	155	-9.17	-553.64	-10.95	-551.86	31.11	-19.53	-2286.82	-30.23	-2276.11	155.43
1	97	156	-8.71	-991.27	-8.73	-991.26	-4.02	-240.21	-3350.83	-242.21	-3348.83	-78.86
1	97	157	-1.65	-761.81	-2.08	-761.38	-18.02	-27.98	-2740.09	-30.85	-2737.22	-88.11
1	97	158	2.50	-108.03	-4.71	-100.83	-27.28	57.36	-1372.75	52.18	-1367.57	-85.93
1	97	159	501.22	110.25	110.28	501.19	-3.29	488.65	-108.79	-108.70	488.56	7.28
1	97	160	453.98	72.94	73.47	453.45	-14.26	631.89	95.74	190.97	536.66	204.91
1	97	161	-11.45	-755.83	-12.16	-755.13	22.87	-178.78	-2839.89	-184.25	-2834.42	120.61
1	97	162	-3.31	-304.37	-5.40	-302.28	-25.00	28.79	-1788.13	25.51	-1784.85	-77.14
1	97	163	-3.22	-866.46	-3.50	-866.18	-15.63	-58.95	-2959.02	-62.36	-2955.62	-99.28
1	97	164	-11.21	-979.71	-11.23	-979.70	3.81	-286.01	-3333.90	-286.09	-3333.82	-15.44
1	97	165	20.89	-67.04	1.56	-47.70	36.42	148.38	-1204.48	126.88	-1182.99	169.15
1	97	166	-2.90	-480.37	-3.93	-479.34	-22.11	6.80	-2155.57	4.17	-2152.94	-75.39
1	97	167	-2.88	-316.54	-7.37	-312.05	37.26	83.71	-1765.76	69.58	-1751.62	161.06
1	97	168	-5.92	-946.50	-6.03	-946.39	-10.51	-122.82	-3138.23	-126.58	-3134.47	-106.46
1	97	190	1214.88	325.23	328.43	1211.68	53.30	1019.05	528.60	530.25	1017.40	28.45
1	97	191	453.71	-131.15	-131.01	453.56	9.33	840.42	421.11	516.19	745.34	-175.58
1	97	192	318.09	-14.97	-14.09	317.21	-17.10	234.18	-428.76	147.18	-341.75	-223.85
1	97	193	191.31	-15.57	-12.70	188.43	24.22	262.75	-678.85	156.57	-572.67	297.84
1	97	194	3.60	-619.83	3.10	-619.33	-17.71	30.77	-2478.68	23.47	-2471.37	-135.17

M_G	Cmb	Nodo	N max	N min	N 1	N 2	N 1-2	M max	M min	M 1	M 2	M 1-2
1	97	195	11.29	-893.92	11.15	-893.78	11.28	-146.06	-3246.88	-148.26	-3244.67	82.59
1	97	196	105.77	-9.10	-2.21	98.88	-27.27	153.36	-953.73	115.67	-916.04	-200.78
1	97	197	5.49	-551.92	4.26	-550.69	26.14	-21.44	-2350.78	-37.03	-2335.19	189.92
1	97	198	9.45	-979.41	9.44	-979.40	-3.59	-140.24	-3412.14	-140.64	-3411.73	-36.51
1	97	199	3.61	-745.81	3.29	-745.49	-15.49	1.91	-2747.82	-3.61	-2742.30	-123.12
1	97	200	6.75	-117.59	0.95	-111.79	-26.22	106.93	-1408.14	86.17	-1387.38	-176.11
1	97	201	1059.59	273.16	276.27	1056.48	-49.36	1100.50	762.24	770.01	1092.74	-50.66
1	97	202	368.94	-117.83	-117.82	368.92	-2.55	836.77	330.06	574.38	592.45	253.19
1	97	203	9.05	-749.93	8.57	-749.45	19.11	-116.51	-2918.16	-123.70	-2910.98	141.71
1	97	204	3.92	-304.18	2.18	-302.43	-23.11	78.96	-1808.08	65.54	-1794.66	-158.58
1	97	205	3.95	-850.57	3.76	-850.38	-12.86	-32.19	-2975.36	-36.01	-2971.54	-106.01
1	97	206	11.43	-970.60	11.42	-970.59	3.37	-153.53	-3411.87	-153.66	-3411.74	20.53
1	97	207	11.95	-82.93	-2.30	-68.68	33.90	134.95	-1284.92	83.45	-1233.42	265.47
1	97	208	3.64	-472.49	2.78	-471.64	-20.15	55.21	-2165.57	45.58	-2155.94	-145.92
1	97	209	3.99	-322.29	0.87	-319.18	31.71	44.59	-1833.07	16.44	-1804.92	228.18
1	97	210	6.00	-932.46	5.91	-932.38	-9.02	-66.34	-3170.68	-68.36	-3168.65	-79.21
1	97	211	34.79	-813.59	-101.55	-677.26	-311.57	39.04	-231.37	-11.17	-181.16	-105.15
1	97	212	570.31	-0.40	28.22	541.70	124.56	744.72	-91.59	-78.64	731.77	103.29
1	97	213	-4.02	-986.72	-4.04	-986.70	4.55	18.29	-3345.70	18.28	-3345.69	7.41
1	97	214	303.26	24.83	28.31	299.79	30.90	46.84	-377.98	39.78	-370.92	54.30
1	97	215	173.00	21.74	26.53	168.20	-26.49	46.79	-620.47	39.25	-612.94	-70.52
1	97	216	84.75	7.71	8.33	84.14	6.86	5.87	-927.91	2.59	-924.64	55.19
1	97	217	-4.63	-981.44	-4.63	-981.43	1.86	13.03	-3344.03	13.02	-3344.02	-5.25
1	97	218	0.83	-118.51	0.78	-118.46	2.48	4.48	-1383.09	2.52	-1381.13	52.12
1	97	219	-4.58	-905.01	-4.58	-905.01	0.62	12.90	-3178.68	12.77	-3178.55	-20.49
1	97	220	-1.19	-304.09	-1.20	-304.08	1.62	5.15	-1787.89	3.80	-1786.54	49.19
1	97	221	-3.85	-758.48	-3.85	-758.47	-2.15	17.81	-2850.58	17.42	-2850.20	-33.34
1	97	222	-1.65	-470.90	-1.66	-470.90	1.39	5.61	-2146.65	4.60	-2145.65	46.52
1	97	223	479.40	-1.73	26.78	450.89	-113.60	596.77	-87.03	-67.09	576.83	-115.04
1	97	224	-1.80	-617.51	-1.80	-617.51	1.30	5.85	-2460.02	5.09	-2459.25	43.35
1	97	225	-2.84	-556.65	-2.85	-556.64	-2.36	-0.59	-2326.11	-1.52	-2325.18	-46.54
1	97	226	-2.02	-743.22	-2.02	-743.22	1.36	5.93	-2728.72	5.38	-2728.17	38.83
1	97	227	-0.20	-327.57	-0.20	-327.57	-0.55	4.09	-1809.06	2.11	-1807.09	-59.75
1	97	228	-2.67	-848.23	-2.68	-848.23	1.96	5.69	-2955.01	5.35	-2954.67	31.82
1	97	229	7.71	-85.67	7.53	-85.50	-4.05	5.68	-1258.19	1.96	-1254.47	-68.48
1	97	230	-3.46	-933.63	-3.48	-933.60	4.56	0.38	-3148.31	0.26	-3148.18	20.00
1	97	231	51.18	-713.97	-85.43	-577.36	293.03	-8.29	-256.16	-42.67	-221.79	85.67
1	97	232	570.84	-0.95	28.25	541.64	-125.87	750.85	-92.99	-78.97	736.83	-107.86
1	97	233	33.58	-819.10	-101.77	-683.75	311.59	28.19	-224.45	-10.48	-185.78	90.96
1	97	234	301.00	24.90	28.41	297.48	-30.96	47.94	-389.59	39.92	-381.57	-58.69
1	97	235	80.76	7.65	8.32	80.10	-6.93	6.25	-942.45	2.63	-938.82	-58.55
1	97	236	0.79	-122.95	0.75	-122.91	-2.39	4.87	-1397.77	2.73	-1395.63	-54.84
1	97	237	-1.22	-307.70	-1.23	-307.69	-1.52	4.97	-1798.10	3.52	-1796.65	-51.16
1	97	238	-1.67	-473.38	-1.67	-473.38	-1.37	5.58	-2154.15	4.53	-2153.10	-47.68
1	97	239	-1.79	-619.05	-1.79	-619.04	-1.31	5.84	-2465.54	5.06	-2464.77	-43.82
1	97	240	-2.01	-744.04	-2.01	-744.03	-1.37	5.93	-2732.77	5.38	-2732.23	-38.70
1	97	241	-2.66	-848.54	-2.67	-848.53	-1.96	5.70	-2957.99	5.37	-2957.66	-31.20
1	97	242	-3.45	-933.59	-3.47	-933.57	-4.57	0.39	-3150.54	0.28	-3150.43	-18.97
1	97	243	-4.01	-986.48	-4.03	-986.46	-4.56	18.31	-3347.45	18.30	-3347.44	-6.06
1	97	244	-4.62	-981.09	-4.62	-981.09	-1.86	13.05	-3345.48	13.03	-3345.47	6.85
1	97	245	-4.58	-904.64	-4.58	-904.64	-0.62	12.92	-3180.00	12.77	-3179.84	22.30
1	97	246	-3.85	-758.14	-3.85	-758.13	2.15	17.84	-2851.87	17.41	-2851.44	35.30
1	97	247	-2.84	-556.39	-2.85	-556.38	2.36	-0.54	-2327.47	-1.56	-2326.46	48.61
1	97	248	-0.20	-327.40	-0.20	-327.40	0.55	4.16	-1810.57	2.04	-1808.46	61.88
1	97	249	7.71	-85.60	7.53	-85.42	4.05	5.82	-1259.88	1.87	-1255.92	70.63
1	97	250	173.00	21.75	26.54	168.20	26.51	47.29	-622.19	39.32	-614.22	72.61
1	97	251	479.50	-1.77	26.79	450.94	113.71	598.08	-87.51	-66.90	577.47	117.07
1	97	252	51.27	-714.40	-85.47	-577.66	-293.26	-9.74	-253.79	-42.97	-220.57	-83.69
1	102	43	498.06	127.99	129.10	496.96	-20.20	493.15	242.43	242.48	493.10	3.53
1	102	44	232.45	44.33	44.33	232.45	0.25	238.00	-8.87	-8.20	237.33	12.82
1	102	45	175.69	-54.91	-54.89	175.67	-2.17	302.86	175.33	218.14	260.06	60.22
1	102	46	212.42	30.01	30.39	212.04	-8.31	247.35	62.51	71.25	238.62	39.22
1	102	47	98.79	-5.97	-5.24	98.05	8.74	75.71	-278.45	56.19	-258.93	80.83
1	102	48	115.15	8.07	8.56	114.65	7.27	20.84	-260.84	16.12	-256.13	36.14
1	102	49	99.15	-6.01	-5.29	98.42	-8.72	74.75	-278.68	54.22	-258.16	-82.66
1	102	50	115.29	8.09	8.59	114.79	-7.33	18.53	-260.72	14.02	-256.21	-35.22
1	102	51	2.56	-324.17	2.48	-324.09	5.18	13.53	-1224.46	12.90	-1223.83	27.99
1	102	52	-2.62	-329.31	-2.73	-329.21	5.78	-90.66	-1231.70	-90.73	-1231.63	8.94
1	102	53	2.56	-324.11	2.48	-324.02	-5.21	13.52	-1224.29	12.86	-1223.63	-28.58
1	102	54	-2.63	-329.23	-2.74	-329.13	-5.85	-91.17	-1231.60	-91.25	-1231.52	-9.31
1	102	55	8.21	-19.38	-8.89e-02	-11.09	12.65	52.47	-547.92	43.92	-539.37	71.16
1	102	56	11.13	-13.70	0.10	-2.67	12.34	-7.73	-535.10	-9.25	-533.58	28.27
1	102	57	2.40	-197.93	1.96	-197.48	-9.44	25.80	-953.97	23.45	-951.62	-47.92
1	102	58	-3.15	-199.21	-3.71	-198.65	-10.48	-58.71	-954.17	-59.03	-953.85	-16.88
1	102	59	2.66	-387.86	2.65	-387.85	-1.66	7.94	-1360.14	7.87	-1360.07	-9.79

M_G	Cmb	Nodo	N max	N min	N 1	N 2	N 1-2	M max	M min	M 1	M 2	M 1-2
1	102	60	-1.96	-394.06	-1.97	-394.05	-1.86	-106.60	-1370.01	-106.61	-1370.00	-3.19
1	102	61	2.62	-363.94	2.59	-363.91	3.34	10.03	-1309.24	9.76	-1308.98	18.64
1	102	62	-2.22	-369.81	-2.25	-369.78	3.70	-100.59	-1318.20	-100.62	-1318.17	5.81
1	102	63	2.50	-112.65	1.33	-111.48	11.53	36.22	-768.98	31.96	-764.72	58.37
1	102	64	-1.70	-110.15	-3.11	-108.73	12.32	-34.36	-762.96	-35.02	-762.30	21.92
1	102	65	232.47	44.10	44.10	232.47	-0.16	238.89	-5.34	-4.68	238.23	-12.67
1	102	66	498.40	127.93	129.01	497.33	19.93	489.70	216.86	216.87	489.69	-1.76
1	102	67	175.95	-55.02	-55.00	175.93	2.18	301.17	166.16	207.16	260.17	-62.09
1	102	68	212.48	29.97	30.34	212.11	8.18	246.42	62.80	70.75	238.47	-37.38
1	102	69	2.48	-268.68	2.29	-268.49	-7.24	18.62	-1105.83	17.33	-1104.54	-38.02
1	102	70	-3.08	-272.40	-3.32	-272.15	-8.13	-77.17	-1110.32	-77.33	-1110.16	-12.76
1	102	71	2.39	-198.06	1.95	-197.62	9.39	25.80	-954.30	23.51	-952.01	47.33
1	102	72	-3.15	-199.35	-3.70	-198.80	10.42	-57.58	-954.29	-57.89	-953.98	16.64
1	102	73	2.66	-387.88	2.65	-387.88	1.63	7.95	-1360.19	7.89	-1360.13	9.22
1	102	74	-1.96	-394.08	-1.97	-394.07	1.79	-106.45	-1370.05	-106.46	-1370.04	2.79
1	102	75	2.62	-363.90	2.59	-363.87	-3.37	10.01	-1309.13	9.73	-1308.85	-19.22
1	102	76	-2.22	-369.76	-2.26	-369.72	-3.77	-100.90	-1318.13	-100.93	-1318.10	-6.20
1	102	77	8.33	-19.20	-7.55e-02	-10.80	-12.68	52.42	-547.30	43.71	-538.59	-71.76
1	102	78	11.27	-13.64	0.12	-2.49	-12.39	-9.82	-535.05	-11.32	-533.55	-28.05
1	102	79	2.47	-268.78	2.28	-268.59	7.20	18.63	-1106.07	17.38	-1104.83	37.42
1	102	80	-3.07	-272.51	-3.31	-272.26	8.06	-76.40	-1110.44	-76.55	-1110.29	12.43
1	102	81	2.52	-112.46	1.35	-111.28	-11.57	36.23	-768.52	31.89	-764.18	-58.94
1	102	82	-1.68	-109.99	-3.12	-108.55	-12.38	-35.96	-762.86	-36.62	-762.19	-22.01
1	102	83	2.67	-395.87	2.67	-395.87	-1.43e-02	7.26	-1377.18	7.26	-1377.18	-0.28
1	102	84	-1.88	-402.16	-1.88	-402.16	-3.09e-02	-108.43	-1387.31	-108.43	-1387.31	-0.20
1	102	106	232.46	46.24	46.24	232.46	3.04e-03	240.39	32.46	32.46	240.39	0.15
1	102	107	204.27	35.83	35.83	204.27	-8.97e-03	230.06	53.72	53.72	230.06	4.85e-03
1	102	108	112.26	16.14	16.14	112.26	-1.88e-02	-22.93	-262.79	-22.93	-262.79	0.10
1	102	109	112.35	16.15	16.15	112.35	-2.51e-02	-23.24	-262.80	-23.24	-262.80	8.90e-02
1	102	110	-4.56	-328.75	-4.56	-328.75	-2.13e-02	-131.94	-1237.19	-131.94	-1237.19	-0.10
1	102	111	-4.57	-328.68	-4.57	-328.68	-2.61e-02	-132.37	-1237.16	-132.37	-1237.16	-3.96e-02
1	102	112	2.02	-0.21	2.02	-0.21	-1.21e-02	-51.68	-537.60	-51.68	-537.60	0.12
1	102	113	-5.58	-196.64	-5.58	-196.64	-2.52e-02	-96.74	-957.38	-96.74	-957.38	1.89e-02
1	102	114	-3.51	-394.19	-3.51	-394.19	-2.68e-02	-151.56	-1376.73	-151.56	-1376.73	-9.11e-02
1	102	115	-3.91	-369.72	-3.91	-369.72	-2.43e-02	-144.03	-1324.46	-144.03	-1324.46	-0.12
1	102	116	-4.02	-105.83	-4.02	-105.83	-9.09e-03	-74.59	-765.17	-74.59	-765.17	5.98e-02
1	102	117	232.51	46.18	46.18	232.51	-1.76e-02	240.53	32.50	32.50	240.53	3.29e-02
1	102	118	204.35	35.80	35.80	204.35	-2.36e-02	230.14	53.60	53.60	230.14	9.85e-02
1	102	119	-5.31	-271.04	-5.31	-271.04	-2.56e-02	-116.20	-1114.79	-116.20	-1114.79	-1.05e-02
1	102	120	-5.58	-196.74	-5.58	-196.74	-1.19e-02	-96.09	-957.40	-96.09	-957.40	-1.22e-02
1	102	121	-3.51	-394.22	-3.51	-394.22	-2.60e-02	-151.42	-1376.75	-151.42	-1376.75	-0.12
1	102	122	-3.92	-369.67	-3.92	-369.67	-2.65e-02	-144.31	-1324.44	-144.31	-1324.44	-6.71e-02
1	102	123	2.04	-0.12	2.04	-0.12	-2.50e-02	-52.22	-537.62	-52.22	-537.62	7.07e-02
1	102	124	-5.30	-271.13	-5.30	-271.13	-1.68e-02	-115.65	-1114.82	-115.65	-1114.82	-6.91e-02
1	102	125	-4.01	-105.73	-4.01	-105.73	-2.49e-02	-75.24	-765.17	-75.24	-765.17	4.67e-02
1	102	126	-3.38	-402.36	-3.38	-402.36	-2.67e-02	-153.95	-1394.15	-153.95	-1394.15	-0.11
1	102	148	232.43	44.12	44.12	232.43	-0.16	238.86	-5.42	-4.76	238.20	-12.65
1	102	149	212.43	29.98	30.35	212.06	8.19	246.37	62.72	70.72	238.37	-37.50
1	102	150	115.22	8.09	8.59	114.72	-7.31	18.57	-260.85	14.03	-256.31	-35.32
1	102	151	115.28	8.10	8.59	114.78	7.28	18.49	-260.83	13.93	-256.27	35.39
1	102	152	-2.63	-329.33	-2.74	-329.22	-5.83	-91.26	-1231.76	-91.33	-1231.68	-9.26
1	102	153	-2.63	-329.28	-2.74	-329.18	5.81	-91.45	-1231.75	-91.53	-1231.67	9.21
1	102	154	11.22	-13.68	0.11	-2.57	-12.38	-9.78	-535.18	-11.29	-533.67	-28.11
1	102	155	-3.15	-199.25	-3.71	-198.69	10.44	-58.92	-954.30	-59.24	-953.98	16.90
1	102	156	-1.96	-394.11	-1.97	-394.10	1.81	-106.93	-1370.15	-106.93	-1370.15	2.99
1	102	157	-2.22	-369.85	-2.26	-369.81	-3.75	-101.06	-1318.29	-101.10	-1318.26	-6.12
1	102	158	-1.69	-110.08	-3.12	-108.65	-12.37	-35.92	-763.00	-36.59	-762.33	-22.04
1	102	159	232.48	44.11	44.11	232.48	0.14	238.91	-5.37	-4.70	238.25	12.73
1	102	160	212.49	29.97	30.35	212.12	-8.22	246.49	62.67	70.70	238.46	37.57
1	102	161	-3.08	-272.44	-3.32	-272.20	8.09	-77.42	-1110.46	-77.58	-1110.31	12.72
1	102	162	-3.16	-199.31	-3.72	-198.75	-10.46	-58.69	-954.31	-59.01	-954.00	-16.89
1	102	163	-1.96	-394.13	-1.97	-394.12	-1.84	-106.85	-1370.16	-106.86	-1370.15	-3.08
1	102	164	-2.22	-369.81	-2.26	-369.78	3.73	-101.21	-1318.28	-101.24	-1318.25	6.04
1	102	165	11.22	-13.61	0.12	-2.51	12.35	-9.93	-535.16	-11.45	-533.65	28.17
1	102	166	-3.08	-272.49	-3.32	-272.25	-8.11	-77.19	-1110.48	-77.35	-1110.32	-12.73
1	102	167	-1.69	-110.01	-3.11	-108.59	12.34	-36.12	-762.99	-36.80	-762.31	22.08
1	102	168	-1.88	-402.21	-1.88	-402.21	-1.32e-02	-108.79	-1387.44	-108.79	-1387.44	-4.68e-02
1	102	190	498.40	127.96	129.03	497.33	19.93	489.80	217.13	217.14	489.78	-1.79
1	102	191	175.92	-55.03	-55.01	175.90	2.19	301.24	166.13	207.27	260.10	-62.17
1	102	192	99.08	-6.01	-5.28	98.35	-8.72	74.79	-278.85	54.24	-258.30	-82.74
1	102	193	99.13	-6.01	-5.29	98.41	8.70	74.80	-278.83	54.23	-258.26	82.77
1	102	194	2.56	-324.22	2.48	-324.14	-5.20	13.35	-1224.52	12.69	-1223.86	-28.47
1	102	195	2.56	-324.20	2.48	-324.12	5.20	13.29	-1224.51	12.64	-1223.85	28.44
1	102	196	8.30	-19.25	-7.50e-02	-10.88	-12.67	52.39	-547.50	43.67	-538.78	-71.80
1	102	197	2.40	-198.00	1.96	-197.56	9.42	25.63	-954.18	23.28	-951.83	47.90

M_G	Cmb	Nodo	N max	N min	N 1	N 2	N 1-2	M max	M min	M 1	M 2	M 1-2
1	102	198	2.66	-387.96	2.65	-387.95	1.64	7.70	-1360.34	7.64	-1360.28	9.54
1	102	199	2.63	-364.02	2.59	-363.99	-3.36	9.82	-1309.35	9.54	-1309.08	-19.06
1	102	200	2.52	-112.55	1.35	-111.38	-11.56	36.15	-768.73	31.81	-764.39	-58.95
1	102	201	498.54	128.01	129.08	497.47	-19.94	489.84	217.18	217.19	489.82	1.81
1	102	202	175.98	-55.05	-55.03	175.96	-2.20	301.35	166.16	207.31	260.21	62.20
1	102	203	2.48	-268.77	2.29	-268.58	7.22	18.41	-1106.05	17.13	-1104.77	37.94
1	102	204	2.40	-198.03	1.96	-197.59	-9.43	25.69	-954.19	23.34	-951.85	-47.89
1	102	205	2.66	-387.97	2.65	-387.96	-1.65	7.73	-1360.35	7.66	-1360.28	-9.58
1	102	206	2.63	-364.00	2.59	-363.97	3.35	9.78	-1309.35	9.50	-1309.07	19.02
1	102	207	8.30	-19.21	-7.45e-02	-10.84	12.66	52.37	-547.47	43.64	-538.74	71.83
1	102	208	2.48	-268.80	2.29	-268.60	-7.23	18.48	-1106.06	17.19	-1104.78	-37.95
1	102	209	2.52	-112.51	1.35	-111.34	11.55	36.11	-768.71	31.76	-764.37	58.96
1	102	210	2.67	-395.96	2.67	-395.96	-2.97e-03	7.02	-1377.36	7.02	-1377.36	-2.50e-02
1	102	211	20.99	-335.47	-41.07	-273.41	-135.17	20.69	-142.47	-19.98	-101.81	-70.58
1	102	212	229.94	-1.15	12.22	216.57	53.95	262.95	-36.05	-30.95	257.85	38.73
1	102	213	-1.32	-388.83	-1.32	-388.83	-1.85e-03	3.28	-1352.56	3.28	-1352.56	-2.69
1	102	214	91.69	9.94	12.08	89.55	13.07	19.85	-268.81	18.89	-267.86	16.58
1	102	215	92.24	9.95	12.09	90.09	-13.11	19.99	-270.62	18.92	-269.55	-17.58
1	102	216	3.47	-19.61	3.21	-19.35	2.47	3.06	-544.65	2.56	-544.14	16.64
1	102	217	-1.31	-364.89	-1.31	-364.89	-7.97e-03	3.26	-1301.68	3.24	-1301.66	-5.18
1	102	218	-0.14	-116.62	-0.14	-116.62	0.54	2.62	-764.06	2.35	-763.79	14.37
1	102	219	-1.29	-325.23	-1.29	-325.23	-2.41e-02	3.22	-1217.08	3.17	-1217.04	-7.59
1	102	220	-1.02	-200.53	-1.02	-200.53	0.17	2.94	-948.29	2.79	-948.14	11.95
1	102	221	-1.23	-270.22	-1.23	-270.22	-6.27e-02	3.13	-1099.05	3.04	-1098.96	-9.92
1	102	222	-1.23	-270.31	-1.23	-270.31	6.35e-02	3.12	-1099.35	3.04	-1099.27	9.63
1	102	223	230.40	-1.10	12.23	217.08	-53.92	267.32	-36.78	-31.58	262.12	-39.42
1	102	224	-1.29	-325.29	-1.29	-325.29	2.48e-02	3.21	-1217.29	3.17	-1217.25	7.31
1	102	225	-1.03	-200.39	-1.03	-200.39	-0.16	2.95	-947.86	2.79	-947.70	-12.23
1	102	226	-1.31	-364.93	-1.31	-364.93	8.47e-03	3.26	-1301.81	3.24	-1301.79	4.90
1	102	227	-0.14	-116.41	-0.14	-116.41	-0.54	2.61	-763.48	2.33	-763.20	-14.65
1	102	228	-1.32	-388.85	-1.32	-388.85	2.30e-03	3.28	-1352.63	3.28	-1352.62	2.41
1	102	229	3.49	-19.27	3.21	-19.00	-2.48	2.91	-544.10	2.38	-543.57	-17.02
1	102	230	-1.32	-396.84	-1.32	-396.84	2.12e-04	3.29	-1369.56	3.29	-1369.56	-0.14
1	102	231	20.94	-335.62	-41.12	-273.56	135.19	10.52	-136.65	-18.49	-107.64	58.55
1	102	232	230.37	-1.10	12.23	217.04	-53.92	267.25	-36.78	-31.57	262.04	-39.44
1	102	233	20.95	-335.61	-41.12	-273.54	135.20	10.54	-136.68	-18.51	-107.62	58.59
1	102	234	92.18	9.95	12.09	90.03	-13.11	20.00	-270.78	18.93	-269.71	-17.60
1	102	235	3.49	-19.35	3.21	-19.08	-2.48	2.91	-544.29	2.38	-543.76	-17.03
1	102	236	-0.14	-116.50	-0.14	-116.50	-0.54	2.61	-763.69	2.33	-763.41	-14.64
1	102	237	-1.03	-200.50	-1.03	-200.50	-0.16	2.95	-948.08	2.79	-947.92	-12.21
1	102	238	-1.23	-270.34	-1.23	-270.34	-6.24e-02	3.13	-1099.27	3.04	-1099.18	-9.87
1	102	239	-1.29	-325.36	-1.29	-325.36	-2.39e-02	3.22	-1217.30	3.18	-1217.26	-7.53
1	102	240	-1.31	-365.02	-1.31	-365.02	-7.85e-03	3.27	-1301.89	3.25	-1301.87	-5.10
1	102	241	-1.32	-388.96	-1.32	-388.96	-1.86e-03	3.29	-1352.75	3.28	-1352.74	-2.58
1	102	242	-1.32	-396.96	-1.32	-396.96	7.41e-05	3.29	-1369.72	3.29	-1369.72	-9.15e-03
1	102	243	-1.32	-388.96	-1.32	-388.96	2.01e-03	3.28	-1352.74	3.28	-1352.74	2.57
1	102	244	-1.31	-365.01	-1.31	-365.01	8.01e-03	3.26	-1301.87	3.25	-1301.85	5.09
1	102	245	-1.29	-325.35	-1.29	-325.35	2.41e-02	3.22	-1217.29	3.17	-1217.24	7.52
1	102	246	-1.23	-270.32	-1.23	-270.32	6.25e-02	3.13	-1099.25	3.04	-1099.16	9.87
1	102	247	-1.03	-200.48	-1.03	-200.48	0.16	2.95	-948.06	2.79	-947.90	12.21
1	102	248	-0.14	-116.48	-0.14	-116.48	0.54	2.61	-763.67	2.33	-763.39	14.65
1	102	249	3.49	-19.32	3.21	-19.04	2.48	2.91	-544.26	2.38	-543.73	17.04
1	102	250	92.23	9.95	12.10	90.08	13.11	20.00	-270.73	18.93	-269.66	17.61
1	102	251	230.43	-1.10	12.23	217.10	53.93	267.36	-36.79	-31.58	262.15	39.46
1	102	252	20.95	-335.70	-41.13	-273.62	-135.22	10.55	-136.67	-18.50	-107.61	-58.60
M_G			**N max**	**N min**	**N 1**	**N 2**	**N 1-2**	**M max**	**M min**	**M 1**	**M 2**	**M 1-2**
				-1483.66	-194.82	-1483.62	-461.41		-5126.65	-434.45	-5126.51	-450.18
			1811.48		492.05	1806.61	461.43	1627.63		1365.92	1611.24	460.63

Elem.	Cmb	Nodo	Von Mises	N max	N min	N 1	N 2	N 1-2	M max	M min	M 1	M 2	M 1-2
			daN/cm2	daN/cm	daN/cm	daN/cm	daN/cm	daN/cm	daN	daN	daN	daN	daN
1	2	45	85.46	1104.04	-349.99	-51.37	805.41	587.39	1466.60	134.71	579.29	1022.03	628.08
		46	80.71	1312.28	-196.72	165.13	950.43	-644.28	995.04	318.61	322.77	990.88	-52.87
		44	165.67	2025.90	-1146.21	93.06	786.63	1547.68	1103.11	-1059.83	-547.98	591.26	919.30
		43	169.81	2335.54	-999.35	342.13	994.06	-1635.28	1964.23	502.03	1419.92	1046.33	-706.84
1	30	45	24.98	344.10	-107.88	-7.39	243.61	187.94	339.46	19.53	149.68	209.31	157.16
		46	23.72	389.03	-82.37	43.89	262.77	-208.75	206.31	81.65	84.47	203.49	-18.53
		44	46.89	574.33	-315.07	33.00	226.25	434.08	362.52	-263.21	-107.22	206.53	270.69
		43	49.36	668.22	-293.78	90.27	284.17	-471.13	578.80	143.40	381.35	340.85	-216.75
1	62	45	24.98	342.04	-112.82	-7.74	236.96	191.72	333.86	19.09	148.53	204.43	154.89
		46	23.50	385.42	-79.28	44.63	261.51	-205.49	206.34	79.45	83.07	202.73	-21.10

Elem.	Cmb	Nodo	Von Mises	N max	N min	N 1	N 2	N 1-2	M max	M min	M 1	M 2	M 1-2
		44	47.19	578.07	-320.61	32.66	224.79	438.95	358.52	-261.97	-109.18	205.73	267.32
		43	48.72	658.29	-292.03	88.94	277.32	-465.73	572.48	143.10	379.60	335.97	-213.58
1	85	45	24.98	340.84	-115.87	-7.95	232.91	194.02	330.41	18.83	147.79	201.46	153.46
		46	23.37	383.22	-77.41	45.08	260.74	-203.51	206.41	78.03	82.19	202.26	-22.71
		44	47.37	580.34	-323.99	32.45	223.90	441.92	356.05	-261.23	-110.42	205.23	265.23
		43	48.33	652.26	-290.97	88.13	273.16	-462.45	568.58	142.92	378.49	333.01	-211.62
1	87	45	60.29	781.39	-248.70	-35.30	568.00	417.46	1021.52	92.59	405.90	708.21	439.18
		46	56.91	925.90	-141.42	116.10	668.39	-456.66	690.71	222.98	226.14	687.56	-38.28
		44	116.76	1427.98	-807.34	66.36	554.27	1090.71	782.87	-741.38	-380.04	421.54	648.23
		43	119.65	1644.00	-705.03	239.84	699.13	-1151.84	1384.99	354.05	997.08	741.96	-499.44
1	97	45	57.68	749.85	-239.65	-32.88	543.09	402.30	965.50	87.15	387.22	665.44	416.56
		46	54.41	885.76	-137.83	110.68	637.26	-438.87	649.78	211.48	214.74	646.53	-37.62
		44	111.58	1364.68	-770.93	64.25	529.50	1042.16	753.30	-703.61	-357.63	407.33	619.96
		43	114.31	1568.98	-674.33	228.04	666.62	-1100.01	1325.39	339.25	951.14	713.50	-478.54
1	102	45	24.98	340.84	-115.87	-7.95	232.91	194.02	330.41	18.83	147.79	201.46	153.46
		46	23.37	383.22	-77.41	45.08	260.74	-203.51	206.41	78.03	82.19	202.26	-22.71
		44	47.37	580.34	-323.99	32.45	223.90	441.92	356.05	-261.23	-110.42	205.23	265.23
		43	48.33	652.26	-290.97	88.13	273.16	-462.45	568.58	142.92	378.49	333.01	-211.62
2	2	47	53.59	844.37	-102.31	33.54	708.52	331.89	273.91	-756.99	250.90	-733.98	152.29
		48	55.25	789.76	-47.13	53.57	689.05	-272.29	264.83	-823.73	159.76	-718.65	321.47
		46	52.22	750.23	67.26	67.47	750.02	11.99	1115.33	35.77	52.30	1098.80	132.55
		45	46.76	666.08	-11.06	-9.43	664.44	-33.21	1374.06	830.43	951.86	1252.64	226.42
2	30	47	17.04	236.31	-36.96	13.71	185.64	106.21	51.01	-360.79	49.76	-359.53	22.70
		48	16.71	206.59	-30.85	15.04	160.71	-93.75	36.91	-371.13	16.13	-350.35	89.72
		46	13.11	192.27	15.10	16.98	190.39	-18.16	283.54	16.61	23.95	276.20	43.64
		45	11.60	156.74	-7.86	-7.64	156.52	6.08	359.62	224.96	256.13	328.45	56.80
2	62	47	17.09	235.46	-40.01	13.80	181.66	109.21	49.61	-365.57	48.59	-364.54	20.59
		48	16.45	202.72	-28.42	15.39	158.91	-90.59	34.85	-372.67	15.28	-353.10	87.12
		46	12.97	189.85	16.46	17.66	188.66	-14.34	280.03	16.37	22.76	273.65	40.54
		45	11.39	153.18	-7.99	-7.40	152.59	9.74	353.56	225.22	255.14	323.65	54.26
2	85	47	17.12	234.99	-41.90	13.86	179.23	111.04	48.76	-368.48	47.87	-367.59	19.24
		48	16.29	200.37	-26.95	15.60	157.82	-88.67	33.57	-373.60	14.76	-354.78	85.48
		46	12.89	188.45	17.22	18.06	187.60	-12.02	277.91	16.18	22.00	272.09	38.60
		45	11.27	151.11	-8.15	-7.25	150.20	11.96	349.82	225.41	254.50	320.73	52.66
2	87	47	38.00	594.04	-73.59	24.20	496.24	236.06	188.55	-553.24	173.65	-538.34	104.09
		48	39.01	552.97	-34.77	37.80	480.41	-193.35	180.54	-598.47	108.47	-526.41	225.71
		46	36.53	525.11	47.30	47.39	525.03	6.39	780.58	26.03	37.80	768.81	93.52
		45	32.66	463.89	-8.15	-7.25	462.99	-20.55	962.68	583.68	668.51	877.86	157.97
2	97	47	36.54	566.63	-71.79	23.67	471.16	227.67	177.63	-547.49	164.56	-534.42	96.47
		48	37.33	524.88	-34.75	36.15	453.98	-186.15	166.87	-589.18	99.87	-522.19	214.86
		46	34.63	498.26	45.11	45.14	498.22	4.11	740.59	25.49	36.88	729.20	89.51
		45	30.92	437.90	-8.14	-7.50	437.26	-16.86	915.23	557.61	638.41	834.42	149.56
2	102	47	17.12	234.99	-41.90	13.86	179.23	111.04	48.76	-368.48	47.87	-367.59	19.24
		48	16.29	200.37	-26.95	15.60	157.82	-88.67	33.57	-373.60	14.76	-354.78	85.48
		46	12.89	188.45	17.22	18.06	187.60	-12.02	277.91	16.18	22.00	272.09	38.60
		45	11.27	151.11	-8.15	-7.25	150.20	11.96	349.82	225.41	254.50	320.73	52.66
3	2	55	48.32	561.86	-96.58	40.24	425.05	267.14	125.07	-1581.71	108.30	-1564.94	168.35
		56	44.57	409.13	-63.19	27.35	318.60	-185.92	171.19	-1531.57	141.94	-1502.33	221.25
		48	34.33	509.54	-65.50	-0.41	444.46	-182.18	283.04	-334.90	107.47	-159.34	278.69
		47	28.60	391.74	-173.44	-45.72	264.02	236.37	565.93	-111.99	554.89	-100.96	85.78
3	30	55	14.61	134.50	-41.46	14.68	78.35	82.02	7.08	-638.67	5.73	-637.33	29.42
		56	12.76	85.52	-44.95	7.33	33.23	-63.94	2.24	-619.08	-2.80	-614.04	55.73
		48	10.62	121.22	-44.10	-2.47	79.59	-71.76	46.15	-192.47	10.87	-157.19	84.70
		47	8.47	84.98	-83.57	-16.94	18.34	82.41	142.77	-130.29	142.11	-129.63	13.37
3	62	55	14.67	135.36	-44.88	14.70	75.78	84.79	5.78	-642.60	4.60	-641.42	27.66
		56	12.55	81.85	-42.61	7.53	31.71	-61.05	1.02	-621.36	-3.66	-616.69	53.74
		48	10.33	117.46	-41.37	-2.03	78.12	-68.56	43.62	-193.26	10.13	-159.77	82.54
		47	8.67	86.55	-87.43	-16.69	15.81	85.46	141.67	-134.13	141.19	-133.65	11.47
3	85	55	14.71	135.91	-46.98	14.72	74.22	86.47	5.00	-645.00	3.91	-643.91	26.54
		56	12.43	79.62	-41.19	7.65	30.79	-59.29	0.27	-622.75	-4.18	-618.30	52.47
		48	10.15	115.18	-39.72	-1.76	77.22	-66.63	42.05	-193.73	9.67	-161.35	81.16
		47	8.80	87.52	-89.79	-16.54	14.27	87.31	141.00	-136.48	140.62	-136.10	10.25
3	87	55	34.17	392.20	-70.16	28.79	293.26	189.62	83.77	-1140.20	72.72	-1129.15	115.77
		56	31.37	282.53	-46.78	19.25	216.50	-131.85	113.99	-1103.91	94.07	-1083.99	154.49
		48	24.22	354.46	-48.37	-0.51	306.60	-130.34	193.33	-248.13	72.94	-127.74	196.61
		47	20.19	271.92	-126.69	-32.69	177.92	169.22	395.80	-92.58	388.68	-85.45	58.55
3	97	55	32.77	371.14	-69.12	27.92	274.10	182.50	77.62	-1113.81	67.77	-1103.96	107.86
		56	29.93	264.41	-46.96	18.37	199.08	-126.78	102.87	-1078.47	84.47	-1060.07	146.29
		48	23.18	334.25	-48.42	-0.70	286.53	-126.42	179.04	-248.88	67.09	-136.93	188.08
		47	19.35	255.90	-125.50	-31.68	162.08	164.25	377.21	-101.36	370.97	-95.11	54.32
3	102	55	14.71	135.91	-46.98	14.72	74.22	86.47	5.00	-645.00	3.91	-643.91	26.54
		56	12.43	79.62	-41.19	7.65	30.79	-59.29	0.27	-622.75	-4.18	-618.30	52.47
		48	10.15	115.18	-39.72	-1.76	77.22	-66.63	42.05	-193.73	9.67	-161.35	81.16
		47	8.80	87.52	-89.79	-16.54	14.27	87.31	141.00	-136.48	140.62	-136.10	10.25
4	2	63	41.79	312.53	-161.80	43.78	106.96	235.05	60.90	-2243.81	53.27	-2236.18	132.41

Elem.	Cmb	Nodo	Von Mises	N max	N min	N 1	N 2	N 1-2	M max	M min	M 1	M 2	M 1-2
		64	36.54	147.51	-161.58	13.62	-27.69	-153.16	111.67	-2186.52	94.00	-2168.85	200.75
		56	31.71	244.04	-158.43	-20.89	106.49	-190.89	197.03	-1033.15	144.08	-980.20	249.69
		55	32.42	206.84	-338.12	-54.04	-77.24	272.24	368.12	-947.56	361.96	-941.39	89.87
4	51	63	16.47	66.12	-88.17	14.68	-36.74	72.73	-11.39	-861.76	-11.66	-861.48	15.26
		64	16.82	22.07	-102.54	3.07	-83.54	-44.79	-26.69	-838.22	-28.71	-836.20	40.47
		56	9.26	43.50	-88.73	-7.36	-37.86	-64.33	10.69	-460.53	0.13	-449.97	69.74
		55	14.34	44.08	-160.86	-17.66	-99.12	94.02	83.36	-431.57	83.16	-431.36	10.38
4	83	63	16.36	65.77	-86.74	14.68	-35.65	71.99	-11.63	-859.32	-11.92	-859.03	15.80
		64	16.75	22.76	-102.30	3.04	-82.58	-45.58	-26.82	-836.22	-28.91	-834.13	41.07
		56	9.21	44.60	-88.98	-7.47	-36.91	-65.15	11.16	-458.67	0.40	-447.91	70.28
		55	14.24	43.63	-159.41	-17.74	-98.04	93.24	83.73	-429.14	83.50	-428.91	10.93
4	85	63	16.30	65.56	-85.87	14.67	-34.98	71.53	-11.78	-857.82	-12.09	-857.51	16.14
		64	16.71	23.18	-102.16	3.02	-81.99	-46.06	-26.90	-834.99	-29.03	-832.85	41.45
		56	9.18	45.28	-89.13	-7.53	-36.32	-65.64	11.45	-457.52	0.56	-446.63	70.62
		55	14.17	43.37	-158.52	-17.79	-97.37	92.77	83.96	-427.64	83.71	-427.39	11.27
4	87	63	29.47	216.08	-118.29	31.14	66.64	166.24	38.87	-1610.09	33.90	-1605.12	90.43
		64	26.17	100.02	-119.93	9.49	-29.39	-108.25	70.73	-1568.88	58.79	-1556.95	139.36
		56	22.33	167.54	-116.31	-14.93	66.15	-136.01	132.70	-749.59	96.13	-713.01	175.87
		55	23.42	142.86	-245.73	-38.40	-64.47	193.86	256.47	-688.59	252.46	-684.58	61.41
4	97	63	28.19	202.52	-117.29	30.04	55.19	159.41	35.05	-1565.94	30.67	-1561.56	83.58
		64	25.83	91.95	-120.67	8.95	-37.66	-103.72	60.33	-1526.02	49.41	-1515.10	131.16
		56	21.33	155.91	-115.80	-14.47	54.58	-131.39	121.16	-736.93	86.92	-702.69	167.96
		55	22.96	133.79	-242.14	-36.99	-71.35	187.18	244.08	-677.76	240.54	-674.22	57.01
4	102	63	16.30	65.56	-85.87	14.67	-34.98	71.53	-11.78	-857.82	-12.09	-857.51	16.14
		64	16.71	23.18	-102.16	3.02	-81.99	-46.06	-26.90	-834.99	-29.03	-832.85	41.45
		56	9.18	45.28	-89.13	-7.53	-36.32	-65.64	11.45	-457.52	0.56	-446.63	70.62
		55	14.17	43.37	-158.52	-17.79	-97.37	92.77	83.96	-427.64	83.71	-427.39	11.27
5	2	71	57.22	165.06	-316.60	43.23	-194.77	209.38	10.84	-2829.08	7.01	-2825.25	104.15
		72	59.33	54.40	-384.13	9.13	-338.86	-133.43	66.14	-2773.83	52.43	-2760.12	196.89
		64	37.66	79.83	-315.05	-24.50	-210.72	-174.11	154.03	-1729.40	128.81	-1704.18	216.51
		63	50.75	91.32	-516.89	-51.60	-373.98	257.87	255.96	-1664.05	250.59	-1658.68	101.40
5	49	71	23.01	32.75	-154.08	13.24	-134.57	57.14	-22.24	-1035.32	-22.31	-1035.25	8.09
		72	23.93	8.74	-186.52	1.00	-178.78	-38.09	-50.19	-1015.92	-51.44	-1014.67	34.67
		64	17.32	13.65	-161.01	-8.65	-138.71	-58.30	-12.78	-695.85	-17.88	-690.76	58.75
		63	20.95	16.52	-222.90	-15.99	-190.38	82.02	48.55	-672.85	48.28	-672.58	13.86
5	81	71	22.94	33.33	-153.65	13.30	-133.62	57.84	-21.91	-1032.94	-21.96	-1032.88	7.56
		72	23.85	8.53	-185.38	1.04	-177.89	-37.37	-49.94	-1013.80	-51.15	-1012.60	34.07
		64	17.24	13.37	-159.76	-8.58	-137.81	-57.60	-12.60	-693.69	-17.60	-688.68	58.18
		63	20.89	17.20	-222.53	-15.90	-189.43	82.70	48.86	-670.45	48.62	-670.20	13.35
5	85	71	22.90	33.69	-153.39	13.33	-133.03	58.26	-21.70	-1031.46	-21.75	-1031.41	7.22
		72	23.80	8.41	-184.67	1.06	-177.33	-36.93	-49.78	-1012.49	-50.96	-1011.31	33.69
		64	17.19	13.20	-158.99	-8.53	-137.26	-57.18	-12.48	-692.34	-17.44	-687.39	57.82
		63	20.85	17.61	-222.29	-15.84	-188.84	83.10	49.06	-668.96	48.82	-668.72	13.02
5	87	71	41.17	113.70	-230.69	30.60	-147.58	147.35	4.22	-2023.47	1.78	-2021.02	70.39
		72	42.72	36.99	-280.31	6.23	-249.55	-93.88	37.31	-1984.08	28.16	-1974.92	135.75
		64	27.40	54.33	-230.58	-17.47	-158.78	-123.70	100.94	-1245.17	83.55	-1227.77	152.05
		63	36.58	62.78	-373.78	-36.51	-274.50	182.99	177.07	-1198.45	173.57	-1194.95	69.34
5	97	71	40.17	106.20	-227.87	29.36	-151.03	140.59	2.57	-1961.78	0.46	-1959.67	64.31
		72	41.71	34.09	-277.19	5.75	-248.85	-89.55	27.17	-1923.97	18.89	-1915.69	126.85
		64	27.00	50.13	-228.71	-16.90	-161.68	-119.15	89.52	-1215.17	73.26	-1198.91	144.75
		63	35.76	58.52	-366.43	-35.03	-272.89	176.07	167.84	-1169.69	164.74	-1166.58	64.36
5	102	71	22.90	33.69	-153.39	13.33	-133.03	58.26	-21.70	-1031.46	-21.75	-1031.41	7.22
		72	23.80	8.41	-184.67	1.06	-177.33	-36.93	-49.78	-1012.49	-50.96	-1011.31	33.69
		64	17.19	13.20	-158.99	-8.53	-137.26	-57.18	-12.48	-692.34	-17.44	-687.39	57.82
		63	20.85	17.61	-222.29	-15.84	-188.84	83.10	49.06	-668.96	48.82	-668.72	13.02
6	2	79	76.56	100.88	-529.64	40.63	-469.40	185.36	-45.21	-3350.05	-47.31	-3347.95	83.33
		80	80.54	29.21	-636.37	8.51	-615.66	-115.54	40.16	-3291.54	27.95	-3279.33	201.33
		72	60.89	24.98	-543.20	-21.79	-496.43	-156.16	107.12	-2368.77	92.52	-2354.17	189.56
		71	70.41	35.25	-717.67	-46.13	-636.30	233.76	180.68	-2302.94	174.94	-2297.20	119.25
6	49	79	28.85	19.41	-226.77	11.19	-218.55	44.23	-28.73	-1173.29	-28.73	-1173.29	1.43
		80	29.78	3.66	-260.31	0.30	-256.95	-29.62	-68.09	-1158.85	-68.81	-1158.14	27.95
		72	24.33	2.89	-234.67	-7.92	-223.86	-49.51	-35.36	-896.85	-37.90	-894.30	46.77
		71	27.02	4.75	-282.84	-13.14	-264.95	69.47	24.59	-876.46	24.31	-876.19	15.80
6	81	79	28.77	19.75	-225.90	11.27	-217.42	44.84	-28.33	-1171.17	-28.33	-1171.17	0.90
		80	29.71	3.56	-259.30	0.32	-256.06	-28.99	-67.75	-1156.90	-68.44	-1156.22	27.33
		72	24.26	2.76	-233.59	-7.86	-222.97	-48.96	-35.14	-894.86	-37.62	-892.38	46.15
		71	26.95	5.18	-282.03	-13.03	-263.82	70.00	24.89	-874.32	24.63	-874.06	15.26
6	85	79	28.73	19.95	-225.36	11.31	-216.73	45.21	-28.08	-1169.85	-28.08	-1169.85	0.57
		80	29.66	3.50	-258.67	0.34	-255.51	-28.61	-67.54	-1155.69	-68.20	-1155.02	26.95
		72	24.22	2.68	-232.92	-7.82	-222.42	-48.63	-35.00	-893.63	-37.45	-891.18	45.77
		71	26.90	5.45	-281.53	-12.97	-263.12	70.32	25.08	-872.99	24.83	-872.75	14.93
6	87	79	54.85	69.44	-382.67	28.60	-341.83	129.60	-33.97	-2389.26	-35.29	-2387.95	55.63
		80	57.65	19.79	-458.59	5.72	-444.51	-80.84	17.59	-2348.27	9.54	-2340.22	137.81
		72	43.82	16.83	-393.01	-15.57	-360.61	-110.59	66.69	-1698.27	56.69	-1688.27	132.48
		71	50.51	24.00	-515.77	-32.48	-459.28	165.22	123.69	-1651.58	119.94	-1647.83	81.49

Elem.	Cmb	Nodo	Von Mises	N max	N min	N 1	N 2	N 1-2	M max	M min	M 1	M 2	M 1-2
6	97	79	53.29	64.80	-374.82	27.29	-337.30	122.83	-32.64	-2309.95	-33.75	-2308.85	50.10
		80	55.94	18.16	-448.00	5.19	-435.02	-76.67	7.00	-2271.32	-0.19	-2264.13	127.77
		72	42.75	15.36	-385.43	-15.08	-354.99	-106.19	55.69	-1650.53	46.41	-1641.25	125.49
		71	49.14	22.15	-502.52	-31.01	-449.36	158.32	116.50	-1605.42	113.19	-1602.10	75.53
6	102	79	28.73	19.95	-225.36	11.31	-216.73	45.21	-28.08	-1169.85	-28.08	-1169.85	0.57
		80	29.66	3.50	-258.67	0.34	-255.51	-28.61	-67.54	-1155.69	-68.20	-1155.02	26.95
		72	24.22	2.68	-232.92	-7.82	-222.42	-48.63	-35.00	-893.63	-37.45	-891.18	45.77
		71	26.90	5.45	-281.53	-12.97	-263.12	70.32	25.08	-872.99	24.83	-872.75	14.93
7	2	51	94.22	70.84	-747.80	37.17	-714.14	162.56	-118.13	-3811.24	-119.27	-3810.10	64.85
		52	99.28	18.95	-870.12	8.24	-859.42	-96.96	35.54	-3737.14	23.88	-3725.48	209.42
		80	81.75	8.21	-773.81	-17.00	-748.60	-138.13	62.88	-2943.40	53.07	-2933.60	171.41
		79	88.96	9.34	-917.91	-40.41	-868.16	208.94	118.61	-2874.75	111.96	-2868.09	140.97
7	49	51	33.60	12.11	-290.67	8.80	-287.36	31.46	-32.80	-1276.93	-32.81	-1276.92	-3.74
		52	34.35	1.29	-319.85	-0.10	-318.46	-21.09	-81.02	-1267.31	-81.40	-1266.92	21.32
		80	30.11	-0.85	-298.47	-6.60	-292.72	-40.98	-55.00	-1063.50	-56.29	-1062.21	36.04
		79	32.10	-0.27	-333.35	-10.13	-323.49	56.45	6.88	-1045.66	6.60	-1045.38	17.24
7	81	51	33.51	12.33	-289.47	8.91	-286.04	31.97	-32.26	-1275.05	-32.28	-1275.03	-4.21
		52	34.28	1.26	-318.86	-0.07	-317.53	-20.57	-80.53	-1265.56	-80.89	-1265.19	20.76
		80	30.04	-0.90	-297.45	-6.57	-291.79	-40.58	-54.68	-1061.75	-55.93	-1060.50	35.45
		79	32.02	0.02	-332.20	-10.01	-322.17	56.85	7.26	-1043.78	7.00	-1043.52	16.73
7	85	51	33.46	12.47	-288.73	8.97	-285.23	32.29	-31.92	-1273.87	-31.94	-1273.85	-4.50
		52	34.24	1.24	-318.25	-0.05	-316.96	-20.25	-80.22	-1264.47	-80.58	-1264.11	20.42
		80	30.00	-0.94	-296.82	-6.54	-291.22	-40.33	-54.48	-1060.66	-55.70	-1059.44	35.08
		79	31.96	0.19	-331.49	-9.94	-321.35	57.09	7.50	-1042.61	7.25	-1042.35	16.42
7	87	51	67.26	48.54	-536.69	25.98	-514.12	112.68	-83.08	-2710.61	-83.77	-2709.92	42.63
		52	70.75	12.71	-622.43	5.49	-615.20	-67.34	12.78	-2659.80	5.18	-2652.20	142.34
		80	58.50	5.28	-555.39	-12.20	-537.90	-97.46	34.59	-2103.63	27.95	-2096.99	118.95
		79	63.56	6.11	-656.00	-28.27	-621.62	146.90	79.95	-2055.38	75.61	-2051.04	96.17
7	97	51	65.11	45.09	-522.22	24.61	-501.74	105.83	-77.34	-2613.42	-77.90	-2612.86	37.70
		52	68.36	11.53	-603.66	4.93	-597.06	-63.38	0.91	-2566.53	-5.79	-2559.84	130.94
		80	56.76	4.57	-540.41	-11.88	-523.96	-93.24	24.18	-2038.21	18.09	-2032.12	111.85
		79	61.57	5.40	-635.64	-26.80	-603.43	140.03	74.72	-1992.03	70.89	-1988.20	88.93
7	102	51	33.46	12.47	-288.73	8.97	-285.23	32.29	-31.92	-1273.87	-31.94	-1273.85	-4.50
		52	34.24	1.24	-318.25	-0.05	-316.96	-20.25	-80.22	-1264.47	-80.58	-1264.11	20.42
		80	30.00	-0.94	-296.82	-6.54	-291.22	-40.33	-54.48	-1060.66	-55.70	-1059.44	35.08
		79	31.96	0.19	-331.49	-9.94	-321.35	57.09	7.50	-1042.61	7.25	-1042.35	16.42
8	2	61	109.71	53.63	-948.55	33.52	-928.43	140.55	-213.54	-4216.15	-214.03	-4215.66	43.95
		62	115.45	12.02	-1076.24	6.41	-1070.62	-77.94	48.11	-4109.28	36.93	-4098.09	215.33
		52	100.00	2.35	-981.51	-12.31	-966.85	-119.21	25.39	-3450.57	17.78	-3442.96	162.49
		51	105.60	-3.15	-1103.05	-35.29	-1070.92	185.24	54.46	-3382.38	46.70	-3374.62	163.14
8	33	61	37.26	6.73	-343.87	5.85	-343.00	17.50	-36.81	-1347.48	-36.84	-1347.45	-6.32
		62	37.65	-0.10	-364.56	-0.62	-364.04	-13.77	-91.34	-1341.43	-91.55	-1341.22	16.32
		52	34.62	-2.16	-348.97	-5.38	-345.75	-33.24	-72.31	-1195.83	-73.03	-1195.11	28.45
		51	36.15	-2.74	-373.73	-7.75	-368.72	42.79	-8.56	-1182.07	-8.90	-1181.74	19.74
8	65	61	37.10	7.25	-340.99	6.24	-339.98	18.74	-34.75	-1345.13	-34.79	-1345.09	-7.71
		62	37.57	-0.11	-363.18	-0.54	-362.75	-12.48	-89.48	-1339.77	-89.66	-1339.59	14.70
		52	34.54	-2.17	-347.52	-5.25	-344.44	-32.46	-70.89	-1194.20	-71.52	-1193.57	26.62
		51	35.99	-2.07	-370.90	-7.28	-365.69	43.53	-6.96	-1179.74	-7.24	-1179.46	18.14
8	85	61	37.00	7.57	-339.24	6.47	-338.14	19.50	-33.46	-1343.67	-33.52	-1343.62	-8.57
		62	37.52	-0.11	-362.34	-0.49	-361.96	-11.69	-88.33	-1338.74	-88.48	-1338.59	13.70
		52	34.50	-2.18	-346.63	-5.18	-343.64	-31.98	-70.00	-1193.19	-70.58	-1192.61	25.49
		51	35.90	-1.65	-369.18	-7.00	-363.84	43.98	-5.95	-1178.29	-6.20	-1178.04	17.16
8	87	61	78.06	36.44	-677.28	23.21	-664.04	96.30	-146.87	-2989.87	-147.15	-2989.59	28.16
		62	81.97	7.93	-765.73	4.21	-762.01	-53.52	20.03	-2917.75	12.82	-2910.54	145.38
		52	71.26	1.24	-700.52	-8.90	-690.39	-83.74	7.51	-2459.39	2.44	-2454.32	111.73
		51	75.18	-2.44	-784.47	-24.46	-762.46	129.36	35.35	-2411.87	30.31	-2406.82	111.04
8	97	61	75.31	33.55	-655.69	21.77	-643.91	89.34	-134.94	-2874.32	-135.15	-2874.11	24.11
		62	78.90	7.06	-738.68	3.72	-735.34	-49.77	6.30	-2808.81	0.02	-2802.53	132.75
		52	68.86	0.79	-677.88	-8.72	-668.38	-79.74	-2.31	-2376.52	-6.88	-2371.95	104.04
		51	72.57	-2.53	-756.44	-22.97	-736.00	122.44	32.73	-2331.40	28.29	-2326.96	102.40
8	102	61	37.00	7.57	-339.24	6.47	-338.14	19.50	-33.46	-1343.67	-33.52	-1343.62	-8.57
		62	37.52	-0.11	-362.34	-0.49	-361.96	-11.69	-88.33	-1338.74	-88.48	-1338.59	13.70
		52	34.50	-2.18	-346.63	-5.18	-343.64	-31.98	-70.00	-1193.19	-70.58	-1192.61	25.49
		51	35.90	-1.65	-369.18	-7.00	-363.84	43.98	-5.95	-1178.29	-6.20	-1178.04	17.16
9	2	73	123.00	41.98	-1125.89	30.00	-1113.91	117.68	-328.90	-4568.67	-328.97	-4568.60	17.15
		74	128.91	4.97	-1251.60	2.13	-1248.76	-59.67	63.68	-4410.55	53.89	-4400.76	209.02
		62	115.54	-0.44	-1159.91	-9.14	-1151.21	-100.04	-7.11	-3889.04	-14.02	-3882.12	163.68
		61	120.03	-9.24	-1266.47	-30.65	-1245.07	162.64	-22.67	-3828.13	-31.16	-3819.64	179.61
9	33	73	39.61	3.28	-380.95	3.20	-380.87	5.50	-36.70	-1384.09	-36.78	-1384.00	-10.49
		74	39.65	-1.19	-393.18	-1.23	-393.13	-4.32	-95.93	-1381.72	-95.98	-1381.67	8.29
		62	37.84	-2.56	-383.70	-4.06	-382.20	-23.87	-84.51	-1294.35	-84.80	-1294.06	18.82
		61	38.94	-2.54	-398.62	-4.93	-396.23	30.69	-19.83	-1284.79	-20.12	-1284.51	18.90
9	65	73	39.42	3.73	-377.46	3.63	-377.36	6.33	-34.24	-1381.07	-34.34	-1380.97	-11.36
		74	39.56	-1.11	-391.64	-1.14	-391.61	-3.47	-93.71	-1379.73	-93.75	-1379.69	7.26
		62	37.75	-2.49	-382.14	-3.97	-380.67	-23.60	-82.59	-1292.40	-82.84	-1292.14	17.48

Elem.	Cmb	Nodo	Von Mises	N max	N min	N 1	N 2	N 1-2	M max	M min	M 1	M 2	M 1-2
		61	38.74	-2.00	-395.15	-4.45	-392.70	30.94	-17.71	-1281.78	-17.95	-1281.54	17.72
9	85	73	39.30	4.01	-375.34	3.89	-375.22	6.83	-32.72	-1379.21	-32.83	-1379.11	-11.90
		74	39.51	-1.06	-390.70	-1.09	-390.68	-2.96	-92.33	-1378.51	-92.36	-1378.47	6.63
		62	37.70	-2.46	-381.19	-3.91	-379.74	-23.44	-81.40	-1291.19	-81.62	-1290.96	16.66
		61	38.62	-1.67	-393.04	-4.16	-390.55	31.09	-16.38	-1279.94	-16.61	-1279.71	17.00
9	87	73	87.23	28.19	-800.31	20.52	-792.63	79.36	-223.66	-3229.65	-223.69	-3229.62	9.85
		74	91.20	3.09	-886.42	1.27	-884.60	-40.17	29.86	-3123.88	23.61	-3117.64	140.23
		62	82.05	-0.65	-824.07	-6.62	-818.10	-69.82	-15.71	-2764.73	-20.23	-2760.21	111.34
		61	85.16	-6.51	-896.59	-20.99	-882.12	112.57	-17.48	-2722.57	-22.99	-2717.05	122.01
9	97	73	83.87	25.63	-771.34	19.00	-764.72	72.36	-203.91	-3095.01	-203.93	-3094.99	7.18
		74	87.49	2.57	-851.17	1.00	-849.61	-36.56	14.59	-2999.75	9.21	-2994.38	127.15
		62	79.01	-0.95	-793.80	-6.49	-788.26	-66.05	-24.80	-2664.70	-28.79	-2660.71	102.49
		61	81.92	-6.21	-860.60	-19.46	-847.35	105.57	-16.25	-2624.92	-21.09	-2620.08	112.24
9	102	73	39.30	4.01	-375.34	3.89	-375.22	6.83	-32.72	-1379.21	-32.83	-1379.11	-11.90
		74	39.51	-1.06	-390.70	-1.09	-390.68	-2.96	-92.33	-1378.51	-92.36	-1378.47	6.63
		62	37.70	-2.46	-381.19	-3.91	-379.74	-23.44	-81.40	-1291.19	-81.62	-1290.96	16.66
		61	38.62	-1.67	-393.04	-4.16	-390.55	31.09	-16.38	-1279.94	-16.61	-1279.71	17.00
10	2	83	134.44	31.43	-1280.88	25.56	-1275.00	87.60	-448.42	-4876.04	-448.48	-4875.98	-15.97
		84	139.61	-3.15	-1393.17	-4.30	-1392.02	-39.95	52.77	-4657.19	46.38	-4650.80	173.41
		74	128.34	-3.33	-1307.98	-8.74	-1302.57	-83.86	-42.31	-4258.60	-49.67	-4251.25	175.95
		73	132.17	-10.80	-1404.34	-25.28	-1389.86	141.31	-119.70	-4218.05	-127.59	-4210.16	179.62
10	29	83	40.67	0.62	-402.42	0.52	-402.32	-6.37	-33.86	-1385.82	-34.03	-1385.66	-15.03
		84	40.35	-1.94	-405.85	-2.01	-405.78	5.26	-96.39	-1387.22	-96.39	-1387.22	-1.42
		74	39.75	-2.42	-402.67	-2.93	-402.16	-14.30	-92.44	-1358.09	-92.51	-1358.02	9.49
		73	40.45	-1.29	-408.26	-2.16	-407.39	18.83	-28.24	-1352.76	-28.46	-1352.54	17.00
10	61	83	40.46	1.07	-398.68	0.98	-398.59	-6.01	-31.26	-1382.47	-31.42	-1382.31	-14.74
		84	40.26	-1.84	-404.26	-1.92	-404.18	5.64	-94.02	-1385.11	-94.02	-1385.11	-1.06
		74	39.65	-2.32	-401.09	-2.85	-400.55	-14.56	-90.21	-1356.00	-90.27	-1355.94	8.78
		73	40.24	-0.84	-404.51	-1.70	-403.66	18.54	-25.78	-1349.42	-25.98	-1349.22	16.34
10	85	83	40.34	1.34	-396.41	1.26	-396.33	-5.80	-29.65	-1380.42	-29.81	-1380.26	-14.56
		84	40.20	-1.78	-403.29	-1.86	-403.20	5.87	-92.56	-1383.82	-92.56	-1383.82	-0.85
		74	39.60	-2.26	-400.13	-2.81	-399.58	-14.72	-88.82	-1354.72	-88.88	-1354.67	8.34
		73	40.11	-0.57	-402.23	-1.41	-401.39	18.37	-24.25	-1347.37	-24.44	-1347.18	15.94
10	87	83	94.99	20.80	-906.44	17.21	-902.85	57.63	-302.91	-3434.74	-302.96	-3434.69	-12.59
		84	98.43	-2.43	-982.46	-3.11	-981.78	-25.85	22.61	-3289.08	18.58	-3285.04	115.49
		74	90.84	-2.56	-925.30	-6.20	-921.66	-57.87	-40.25	-3019.50	-44.96	-3014.79	118.41
		73	93.45	-7.44	-989.70	-17.04	-980.09	96.66	-83.20	-2991.52	-88.32	-2986.40	121.87
10	97	83	91.00	18.60	-869.74	15.66	-866.80	51.08	-274.81	-3279.78	-274.87	-3279.72	-13.38
		84	94.09	-2.52	-939.32	-3.06	-938.78	-22.46	8.08	-3149.19	4.66	-3145.77	103.85
		74	87.17	-2.65	-887.49	-5.97	-884.18	-54.10	-47.96	-2902.62	-52.03	-2898.55	107.71
		73	89.58	-6.92	-945.63	-15.53	-937.02	89.51	-76.46	-2876.21	-80.95	-2871.73	111.96
10	102	83	40.34	1.34	-396.41	1.26	-396.33	-5.80	-29.65	-1380.42	-29.81	-1380.26	-14.56
		84	40.20	-1.78	-403.29	-1.86	-403.20	5.87	-92.56	-1383.82	-92.56	-1383.82	-0.85
		74	39.60	-2.26	-400.13	-2.81	-399.58	-14.72	-88.82	-1354.72	-88.88	-1354.67	8.34
		73	40.11	-0.57	-402.23	-1.41	-401.39	18.37	-24.25	-1347.37	-24.44	-1347.18	15.94
11	2	59	145.28	16.53	-1417.81	16.29	-1417.57	18.48	-555.05	-5200.27	-555.10	-5200.22	-15.46
		60	148.10	-13.90	-1490.95	-13.94	-1490.91	7.84	-26.65	-4940.14	-27.18	-4939.61	51.02
		84	138.58	-7.98	-1429.17	-12.36	-1424.80	-78.69	-88.60	-4567.14	-97.90	-4557.84	203.77
		83	141.94	-6.37	-1507.20	-16.90	-1496.66	125.32	-243.82	-4577.24	-248.34	-4572.72	139.80
11	26	59	40.45	-1.30	-408.31	-2.18	-407.44	-18.85	-28.24	-1352.63	-28.47	-1352.40	-17.46
		60	39.74	-2.42	-402.62	-2.93	-402.11	14.28	-92.78	-1358.08	-92.85	-1358.01	-9.78
		84	40.35	-1.95	-405.86	-2.01	-405.79	-5.28	-96.32	-1387.21	-96.32	-1387.21	1.06
		83	40.67	0.63	-402.36	0.53	-402.26	6.35	-33.92	-1385.90	-34.08	-1385.74	14.61
11	58	59	40.24	-0.85	-404.56	-1.71	-403.71	-18.59	-25.75	-1349.29	-25.97	-1349.07	-16.86
		60	39.65	-2.32	-401.04	-2.85	-400.51	14.53	-90.52	-1355.99	-90.59	-1355.93	-9.11
		84	40.26	-1.84	-404.27	-1.92	-404.19	-5.67	-93.95	-1385.10	-93.95	-1385.10	0.66
		83	40.46	1.08	-398.62	0.99	-398.53	5.96	-31.32	-1382.54	-31.47	-1382.39	14.27
11	85	59	40.11	-0.58	-402.29	-1.43	-401.44	-18.44	-24.21	-1347.24	-24.42	-1347.04	-16.49
		60	39.59	-2.27	-400.08	-2.81	-399.54	14.68	-89.12	-1354.71	-89.18	-1354.65	-8.70
		84	40.20	-1.78	-403.31	-1.87	-403.22	-5.90	-92.48	-1383.81	-92.48	-1383.81	0.42
		83	40.34	1.35	-396.34	1.27	-396.26	5.73	-29.71	-1380.48	-29.86	-1380.34	14.05
11	87	59	102.19	10.77	-998.67	10.67	-998.57	9.86	-373.27	-3646.47	-373.32	-3646.42	-12.51
		60	104.01	-9.62	-1047.26	-9.67	-1047.21	7.19	-29.70	-3474.00	-30.01	-3473.69	32.85
		84	97.75	-5.64	-1006.47	-8.49	-1003.63	-53.25	-71.73	-3228.93	-77.59	-3223.07	135.90
		83	99.98	-4.31	-1057.40	-11.10	-1050.61	84.31	-166.59	-3235.47	-169.54	-3232.53	95.07
11	97	59	97.45	9.45	-953.69	9.41	-953.65	6.35	-337.40	-3465.79	-337.46	-3465.73	-13.58
		60	99.03	-9.01	-997.24	-9.09	-997.17	8.48	-38.36	-3311.81	-38.61	-3311.56	28.40
		84	93.48	-5.40	-960.94	-7.89	-958.44	-48.73	-76.92	-3094.97	-81.89	-3090.00	122.37
		83	95.50	-3.92	-1005.68	-9.82	-999.78	76.67	-152.19	-3100.38	-154.79	-3097.78	87.57
11	102	59	40.11	-0.58	-402.29	-1.43	-401.44	-18.44	-24.21	-1347.24	-24.42	-1347.04	-16.49
		60	39.59	-2.27	-400.08	-2.81	-399.54	14.68	-89.12	-1354.71	-89.18	-1354.65	-8.70
		84	40.20	-1.78	-403.31	-1.87	-403.22	-5.90	-92.48	-1383.81	-92.48	-1383.81	0.42
		83	40.34	1.35	-396.34	1.27	-396.26	5.73	-29.71	-1380.48	-29.86	-1380.34	14.05
12	2	75	148.13	4.19	-1510.29	0.01	-1506.11	-79.48	-553.82	-5107.22	-553.98	-5107.06	-26.87
		76	147.21	-20.25	-1510.51	-23.91	-1506.86	73.74	-69.71	-4865.10	-71.80	-4863.01	-100.08

Elem.	Cmb	Nodo	Von Mises	N max	N min	N 1	N 2	N 1-2	M max	M min	M 1	M 2	M 1-2
		60	147.05	-13.57	-1493.00	-15.68	-1490.90	-55.73	-153.77	-4947.60	-162.35	-4939.02	202.67
		59	148.88	2.36	-1523.93	-1.93	-1519.64	80.75	-415.20	-5048.08	-416.37	-5046.91	73.59
12	26	75	38.94	-2.54	-398.67	-4.94	-396.26	-30.77	-19.81	-1284.58	-20.11	-1284.28	-19.50
		76	37.83	-2.56	-383.62	-4.06	-382.12	23.83	-85.07	-1294.34	-85.37	-1294.04	-19.10
		60	39.65	-1.20	-393.17	-1.24	-393.12	4.28	-96.07	-1381.69	-96.13	-1381.63	-8.78
		59	39.61	3.29	-380.87	3.21	-380.78	-5.57	-36.79	-1384.10	-36.86	-1384.03	10.03
12	58	75	38.74	-2.00	-395.20	-4.46	-392.73	-31.02	-17.68	-1281.58	-17.94	-1281.31	-18.33
		76	37.74	-2.50	-382.06	-3.97	-380.59	23.56	-83.15	-1292.39	-83.41	-1292.13	-17.76
		60	39.56	-1.12	-391.63	-1.15	-391.60	3.43	-93.85	-1379.70	-93.90	-1379.66	-7.75
		59	39.41	3.75	-377.37	3.64	-377.27	-6.40	-34.33	-1381.09	-34.42	-1381.00	10.90
12	85	75	38.62	-1.67	-393.08	-4.17	-390.59	-31.17	-16.36	-1279.73	-16.60	-1279.49	-17.60
		76	37.69	-2.46	-381.11	-3.92	-379.66	23.40	-81.96	-1291.18	-82.19	-1290.95	-16.94
		60	39.51	-1.07	-390.70	-1.09	-390.68	2.92	-92.48	-1378.48	-92.52	-1378.44	-7.12
		59	39.30	4.03	-375.25	3.90	-375.13	-6.90	-32.81	-1379.23	-32.91	-1379.13	11.44
12	87	75	103.89	2.53	-1059.23	-0.55	-1056.15	-57.14	-371.41	-3575.43	-371.53	-3575.30	-20.26
		76	103.17	-13.84	-1057.82	-16.46	-1055.19	52.28	-57.41	-3415.55	-58.82	-3414.13	-68.98
		60	103.30	-9.29	-1047.33	-10.60	-1046.02	-36.77	-115.22	-3481.83	-120.57	-3476.47	134.16
		59	104.48	1.86	-1065.74	-0.76	-1063.11	52.91	-281.18	-3549.28	-281.97	-3548.49	50.58
12	97	75	98.79	2.02	-1007.07	-1.07	-1003.98	-55.69	-334.65	-3392.63	-334.79	-3392.49	-20.72
		76	98.01	-12.80	-1004.19	-15.35	-1001.63	50.26	-62.28	-3250.54	-63.58	-3249.24	-64.39
		60	98.38	-8.60	-995.97	-9.69	-994.88	-32.69	-116.10	-3321.81	-120.58	-3317.33	119.77
		59	99.41	2.00	-1010.30	-0.15	-1008.14	46.68	-255.68	-3382.70	-256.39	-3381.98	47.17
12	102	75	38.62	-1.67	-393.08	-4.17	-390.59	-31.17	-16.36	-1279.73	-16.60	-1279.49	-17.60
		76	37.69	-2.46	-381.11	-3.92	-379.66	23.40	-81.96	-1291.18	-82.19	-1290.95	-16.94
		60	39.51	-1.07	-390.70	-1.09	-390.68	2.92	-92.48	-1378.48	-92.52	-1378.44	-7.12
		59	39.30	4.03	-375.25	3.90	-375.13	-6.90	-32.81	-1379.23	-32.91	-1379.13	11.44
13	2	53	142.78	-0.29	-1513.53	-20.02	-1493.80	-171.65	-468.96	-4733.52	-469.80	-4732.68	-59.94
		54	137.73	-17.74	-1425.02	-29.70	-1413.06	129.17	-71.32	-4566.60	-83.17	-4554.75	-230.51
		76	146.54	-15.77	-1462.39	-15.78	-1462.38	-4.35	-142.21	-4993.10	-144.89	-4990.42	114.08
		75	145.68	17.49	-1423.14	17.48	-1423.13	-2.82	-537.71	-5199.60	-537.94	-5199.36	32.96
13	26	53	36.15	-2.74	-373.77	-7.76	-368.75	-42.88	-8.54	-1181.77	-8.89	-1181.42	-20.41
		54	34.61	-2.17	-348.84	-5.38	-345.63	33.19	-73.20	-1195.83	-73.93	-1195.10	-28.64
		76	37.64	-0.12	-364.54	-0.63	-364.02	13.72	-91.72	-1341.38	-91.95	-1341.15	-16.87
		75	37.25	6.75	-343.76	5.87	-342.87	-17.57	-36.93	-1347.45	-36.96	-1347.43	5.90
13	58	53	35.99	-2.06	-370.94	-7.30	-365.71	-43.62	-6.93	-1179.44	-7.24	-1179.14	-18.81
		54	34.53	-2.19	-347.39	-5.26	-344.32	32.41	-71.78	-1194.20	-72.42	-1193.56	-26.80
		76	37.57	-0.12	-363.15	-0.55	-362.72	12.43	-89.87	-1339.71	-90.05	-1339.53	-15.25
		75	37.09	7.27	-340.88	6.25	-339.86	-18.82	-34.87	-1345.10	-34.91	-1345.06	7.30
13	85	53	35.90	-1.65	-369.23	-7.01	-363.86	-44.07	-5.93	-1177.99	-6.20	-1177.72	-17.82
		54	34.48	-2.19	-346.51	-5.18	-343.52	31.94	-70.89	-1193.19	-71.47	-1192.61	-25.68
		76	37.52	-0.13	-362.31	-0.50	-361.93	11.65	-88.71	-1338.68	-88.87	-1338.52	-14.26
		75	36.99	7.60	-339.13	6.49	-338.02	-19.58	-33.59	-1343.64	-33.64	-1343.59	8.15
13	87	53	99.97	-0.42	-1058.25	-14.28	-1044.38	-120.31	-313.43	-3312.74	-314.03	-3312.15	-42.34
		54	96.41	-12.12	-996.21	-20.49	-987.84	90.37	-57.12	-3203.38	-64.98	-3195.51	-157.09
		76	102.70	-10.59	-1023.18	-10.59	-1023.18	-1.35	-106.83	-3507.03	-108.44	-3505.41	74.15
		75	102.05	12.54	-993.84	12.52	-993.82	-4.49	-362.95	-3645.55	-363.11	-3645.39	23.06
13	97	53	94.89	-0.60	-1002.95	-13.81	-989.74	-114.31	-281.05	-3142.30	-281.62	-3141.72	-40.63
		54	91.49	-11.21	-944.01	-19.15	-936.07	85.71	-60.61	-3046.07	-67.66	-3039.02	-144.89
		76	97.56	-9.60	-970.39	-9.60	-970.39	0.38	-107.87	-3339.21	-109.17	-3337.91	64.78
		75	96.91	12.20	-940.75	12.15	-940.70	-6.72	-329.37	-3464.48	-329.53	-3464.32	21.94
13	102	53	35.90	-1.65	-369.23	-7.01	-363.86	-44.07	-5.93	-1177.99	-6.20	-1177.72	-17.82
		54	34.48	-2.19	-346.51	-5.18	-343.52	31.94	-70.89	-1193.19	-71.47	-1192.61	-25.68
		76	37.52	-0.13	-362.31	-0.50	-361.93	11.65	-88.71	-1338.68	-88.87	-1338.52	-14.26
		75	36.99	7.60	-339.13	6.49	-338.02	-19.58	-33.59	-1343.64	-33.64	-1343.59	8.15
14	2	69	128.99	7.29	-1416.70	-40.66	-1368.75	-256.86	-314.20	-4097.98	-316.41	-4095.77	-91.35
		70	119.85	-6.16	-1240.89	-32.65	-1214.40	178.91	-20.19	-4033.49	-47.85	-4005.82	-332.07
		54	137.66	-11.17	-1331.04	-13.15	-1329.06	51.13	-75.61	-4801.97	-75.62	-4801.96	-7.82
		53	133.85	43.47	-1220.77	36.34	-1213.64	-94.66	-597.34	-5088.14	-597.37	-5088.11	-11.86
14	46	69	32.10	-0.26	-333.40	-10.15	-323.51	-56.55	6.91	-1045.23	6.60	-1044.93	-17.97
		70	30.09	-0.86	-298.29	-6.61	-292.55	40.93	-56.31	-1063.53	-57.60	-1062.24	-36.10
		54	34.34	1.26	-319.80	-0.12	-318.41	21.04	-81.68	-1267.23	-82.09	-1266.82	-21.94
		53	33.59	12.15	-290.52	8.82	-287.19	-31.55	-32.96	-1276.87	-32.97	-1276.86	3.37
14	78	69	32.01	0.03	-332.25	-10.03	-322.19	-56.95	7.29	-1043.35	7.00	-1043.06	-17.46
		70	30.02	-0.92	-297.27	-6.57	-291.62	40.52	-55.98	-1061.79	-57.24	-1060.54	-35.51
		54	34.27	1.23	-318.81	-0.09	-317.49	20.52	-81.20	-1265.48	-81.58	-1265.09	-21.37
		53	33.51	12.38	-289.32	8.93	-285.88	-32.06	-32.42	-1274.98	-32.43	-1274.97	3.84
14	85	69	31.96	0.21	-331.54	-9.96	-321.37	-57.19	7.53	-1042.18	7.25	-1041.90	-17.15
		70	29.98	-0.95	-296.64	-6.54	-291.04	40.28	-55.78	-1060.70	-57.01	-1059.47	-35.14
		54	34.23	1.21	-318.20	-0.07	-316.92	20.20	-80.89	-1264.39	-81.26	-1264.01	-21.03
		53	33.45	12.51	-288.59	8.99	-285.07	-32.37	-32.08	-1273.80	-32.09	-1273.79	4.13
14	87	69	90.25	4.88	-988.67	-28.44	-955.35	-178.87	-208.47	-2870.94	-209.97	-2869.44	-63.19
		70	83.89	-4.24	-866.81	-22.64	-848.40	124.64	-21.19	-2830.12	-39.50	-2811.81	-226.07
		54	96.34	-7.31	-929.76	-8.78	-928.29	36.78	-61.23	-3369.86	-61.25	-3369.84	-8.02
		53	93.69	30.60	-852.28	25.42	-847.10	-67.42	-402.51	-3561.93	-402.53	-3561.91	-7.36
14	97	69	85.61	4.42	-935.16	-26.96	-903.79	-168.80	-184.76	-2726.09	-186.14	-2724.70	-59.31

Elem.	Cmb	Nodo	Von Mises	N max	N min	N 1	N 2	N 1-2	M max	M min	M 1	M 2	M 1-2
		70	79.61	-3.95	-820.72	-21.27	-803.40	117.69	-26.39	-2691.83	-42.76	-2675.46	-208.27
		54	91.39	-6.43	-880.30	-7.91	-878.83	35.87	-65.62	-3205.74	-65.65	-3205.70	-10.10
		53	88.90	29.21	-806.51	24.11	-801.41	-65.11	-364.79	-3379.65	-364.80	-3379.64	-5.99
14	102	69	31.96	0.21	-331.54	-9.96	-321.37	-57.19	7.53	-1042.18	7.25	-1041.90	-17.15
		70	29.98	-0.95	-296.64	-6.54	-291.04	40.28	-55.78	-1060.70	-57.01	-1059.47	-35.14
		54	34.23	1.21	-318.20	-0.07	-316.92	20.20	-80.89	-1264.39	-81.26	-1264.01	-21.03
		53	33.45	12.51	-288.59	8.99	-285.07	-32.37	-32.08	-1273.80	-32.09	-1273.79	4.13
15	2	57	105.67	23.54	-1205.94	-56.92	-1125.49	-304.05	-93.17	-3145.92	-100.65	-3138.43	-151.00
		58	92.91	10.96	-962.93	-31.68	-920.29	199.27	96.83	-3164.60	58.39	-3126.16	-351.98
		70	120.22	6.16	-1097.36	-6.05	-1085.16	115.41	35.89	-4387.70	30.46	-4382.27	-154.94
		69	114.13	88.90	-942.27	51.21	-904.58	-193.51	-575.88	-4695.73	-576.26	-4695.36	-39.17
15	46	57	27.02	4.79	-282.92	-13.16	-264.97	-69.59	24.61	-875.86	24.30	-875.55	-16.59
		58	24.31	2.88	-234.41	-7.91	-223.61	49.45	-37.19	-896.96	-39.73	-894.42	-46.68
		70	29.77	3.62	-260.25	0.27	-256.90	29.56	-69.12	-1158.74	-69.88	-1157.99	-28.60
		69	28.84	19.49	-226.59	11.22	-218.32	-44.34	-28.91	-1173.19	-28.91	-1173.19	-1.76
15	78	57	26.95	5.22	-282.11	-13.05	-263.84	-70.12	24.91	-873.72	24.62	-873.43	-16.06
		58	24.24	2.75	-233.33	-7.85	-222.72	48.90	-36.97	-894.98	-39.45	-892.50	-46.05
		70	29.69	3.52	-259.24	0.29	-256.01	28.93	-68.78	-1156.79	-69.51	-1156.07	-27.99
		69	28.76	19.82	-225.72	11.30	-217.20	-44.94	-28.51	-1171.07	-28.52	-1171.06	-1.23
15	85	57	26.90	5.48	-281.61	-12.99	-263.14	-70.44	25.10	-872.39	24.82	-872.11	-15.72
		58	24.19	2.67	-232.66	-7.81	-222.17	48.56	-36.84	-893.74	-39.28	-891.30	-45.67
		70	29.65	3.46	-258.61	0.31	-255.46	28.55	-68.57	-1155.58	-69.27	-1154.88	-27.61
		69	28.72	20.02	-225.18	11.34	-216.50	-45.31	-28.26	-1169.75	-28.26	-1169.74	-0.90
15	87	57	74.03	16.42	-841.51	-39.68	-785.41	-212.10	-58.88	-2213.48	-63.79	-2208.57	-102.76
		58	65.16	7.66	-672.98	-22.16	-643.15	139.32	59.31	-2228.57	33.69	-2202.95	-240.74
		70	84.10	4.57	-766.06	-3.99	-757.50	80.75	14.77	-3079.20	11.07	-3075.50	-106.97
		69	79.91	61.93	-658.20	35.65	-631.92	-135.05	-387.70	-3286.44	-387.94	-3286.21	-26.24
15	97	57	70.31	15.53	-795.89	-37.49	-742.87	-200.52	-47.82	-2111.06	-52.18	-2106.70	-94.75
		58	61.96	7.26	-637.52	-21.02	-609.24	132.04	48.60	-2127.55	25.52	-2104.47	-222.93
		70	79.74	4.58	-724.84	-3.55	-716.70	76.59	4.49	-2929.27	1.07	-2925.86	-100.07
		69	75.85	58.48	-623.20	33.64	-598.36	-127.74	-350.96	-3117.47	-351.16	-3117.27	-23.68
15	102	57	26.90	5.48	-281.61	-12.99	-263.14	-70.44	25.10	-872.39	24.82	-872.11	-15.72
		58	24.19	2.67	-232.66	-7.81	-222.17	48.56	-36.84	-893.74	-39.28	-891.30	-45.67
		70	29.65	3.46	-258.61	0.31	-255.46	28.55	-68.57	-1155.58	-69.27	-1154.88	-27.61
		69	28.72	20.02	-225.18	11.34	-216.50	-45.31	-28.26	-1169.75	-28.26	-1169.74	-0.90
16	2	81	80.44	55.18	-920.66	-65.94	-799.54	-321.74	115.65	-2305.54	100.92	-2290.81	-188.30
		82	64.02	39.30	-636.00	-27.97	-568.74	202.23	171.85	-2369.89	122.59	-2320.63	-350.40
		58	93.36	34.76	-789.03	2.14	-756.41	160.66	188.82	-3618.03	168.11	-3597.32	-279.97
		57	87.20	157.96	-644.16	58.30	-544.50	-264.58	-444.96	-3886.36	-446.10	-3885.22	-62.49
16	46	81	20.94	16.59	-223.00	-16.01	-190.40	-82.15	48.49	-672.00	48.20	-671.70	-14.68
		82	17.29	13.67	-160.67	-8.62	-138.38	58.22	-15.25	-696.09	-20.31	-691.03	-58.44
		58	23.91	8.68	-186.45	0.97	-178.74	38.03	-51.72	-1015.78	-53.01	-1014.48	-35.34
		57	22.99	32.90	-153.87	13.28	-134.26	-57.26	-22.44	-1035.19	-22.51	-1035.12	-8.36
16	78	81	20.89	17.26	-222.63	-15.92	-189.44	-82.83	48.81	-669.60	48.53	-669.32	-14.17
		82	17.21	13.38	-159.42	-8.55	-137.49	57.52	-15.07	-693.92	-20.04	-688.95	-57.86
		58	23.83	8.48	-185.31	1.01	-177.84	37.31	-51.47	-1013.66	-52.72	-1012.41	-34.74
		57	22.93	33.48	-153.45	13.34	-133.30	-57.96	-22.10	-1032.80	-22.16	-1032.74	-7.82
16	85	81	20.85	17.68	-222.40	-15.87	-188.85	-83.23	49.00	-668.11	48.73	-667.84	-13.85
		82	17.16	13.21	-158.66	-8.50	-136.94	57.10	-14.95	-692.58	-19.87	-687.66	-57.50
		58	23.78	8.35	-184.61	1.03	-177.29	36.87	-51.31	-1012.35	-52.54	-1011.12	-34.37
		57	22.89	33.84	-153.18	13.38	-132.71	-58.39	-21.90	-1031.33	-21.95	-1031.27	-7.48
16	87	81	56.40	39.12	-643.41	-46.08	-558.21	-225.59	83.32	-1625.80	73.78	-1616.25	-127.38
		82	44.96	27.92	-445.12	-19.78	-397.42	142.44	112.32	-1672.02	79.08	-1638.77	-241.27
		58	65.41	24.29	-550.63	1.56	-527.91	112.02	118.86	-2546.82	105.07	-2533.03	-191.23
		57	61.18	109.81	-449.85	40.65	-380.70	-184.17	-299.58	-2728.40	-300.32	-2727.65	-42.66
16	97	81	53.62	37.62	-609.48	-43.64	-528.22	-214.42	83.26	-1554.02	74.91	-1545.67	-116.67
		82	42.81	26.90	-422.28	-18.97	-376.42	136.01	99.33	-1599.19	68.97	-1568.84	-225.03
		58	62.12	23.00	-520.82	1.55	-499.37	105.87	100.36	-2430.39	87.94	-2417.97	-176.84
		57	58.19	103.44	-425.82	38.42	-360.79	-173.74	-270.80	-2596.29	-271.46	-2595.62	-39.37
16	102	81	20.85	17.68	-222.40	-15.87	-188.85	-83.23	49.00	-668.11	48.73	-667.84	-13.85
		82	17.16	13.21	-158.66	-8.50	-136.94	57.10	-14.95	-692.58	-19.87	-687.66	-57.50
		58	23.78	8.35	-184.61	1.03	-177.29	36.87	-51.31	-1012.35	-52.54	-1011.12	-34.37
		57	22.89	33.84	-153.18	13.38	-132.71	-58.39	-21.90	-1031.33	-21.95	-1031.27	-7.48
17	2	77	55.26	130.50	-632.89	-68.75	-433.64	-335.27	363.41	-1420.56	342.55	-1399.71	-191.74
		78	32.81	126.81	-336.06	-21.44	-187.81	215.97	202.03	-1534.97	119.01	-1451.95	-370.55
		82	64.32	81.39	-450.23	11.33	-380.18	179.82	272.36	-2885.60	237.59	-2850.84	-329.51
		81	61.58	263.09	-375.68	58.85	-171.44	-297.91	-288.32	-3095.60	-294.61	-3089.31	-132.80
17	48	77	14.34	44.17	-160.97	-17.68	-99.11	-94.15	82.93	-430.40	82.69	-430.16	-11.17
		78	9.24	43.59	-88.37	-7.30	-37.48	64.23	7.60	-460.89	-2.83	-450.46	-69.11
		82	16.80	21.99	-102.48	3.03	-83.51	44.73	-28.87	-838.04	-30.96	-835.95	-41.07
		81	16.45	66.44	-88.00	14.75	-36.31	-72.88	-11.62	-861.59	-11.90	-861.31	-15.44
17	80	77	14.24	43.73	-159.52	-17.76	-98.03	-93.37	83.30	-427.97	83.03	-427.70	-11.72
		78	9.19	44.69	-88.62	-7.41	-36.53	65.05	8.07	-459.02	-2.56	-448.39	-69.64
		82	16.73	22.68	-102.24	3.00	-82.56	45.51	-29.00	-836.04	-31.16	-833.89	-41.67
		81	16.35	66.09	-86.57	14.74	-35.22	-72.13	-11.87	-859.16	-12.17	-858.86	-15.98

Elem.	Cmb	Nodo	Von Mises	N max	N min	N 1	N 2	N 1-2	M max	M min	M 1	M 2	M 1-2
17	85	77	14.17	43.46	-158.64	-17.81	-97.36	-92.89	83.53	-426.47	83.24	-426.19	-12.07
		78	9.16	45.37	-88.77	-7.47	-35.94	65.54	8.36	-457.87	-2.40	-447.11	-69.98
		82	16.68	23.11	-102.09	2.98	-81.96	45.99	-29.08	-834.81	-31.28	-832.61	-42.05
		81	16.28	65.89	-85.70	14.74	-34.55	-71.68	-12.02	-857.66	-12.33	-857.34	-16.32
17	87	77	38.73	92.74	-443.02	-48.21	-302.07	-235.90	252.95	-1003.44	239.47	-989.97	-129.43
		78	23.08	90.49	-235.78	-15.29	-130.00	152.72	135.53	-1084.09	79.02	-1027.58	-256.36
		82	45.09	57.31	-313.74	7.95	-264.38	126.01	177.41	-2034.76	154.23	-2011.57	-225.28
		81	43.22	184.17	-261.88	41.20	-118.90	-208.16	-193.90	-2178.00	-198.05	-2173.85	-90.71
17	97	77	36.81	89.36	-420.37	-45.83	-285.18	-225.02	240.56	-960.71	228.79	-948.94	-118.31
		78	22.01	87.56	-224.26	-14.79	-121.91	146.42	123.30	-1037.93	71.21	-985.85	-240.34
		82	42.86	54.72	-296.30	7.57	-249.14	119.71	155.98	-1945.14	135.07	-1924.23	-208.55
		81	41.12	174.76	-247.41	39.09	-111.75	-197.15	-174.42	-2077.10	-178.12	-2073.40	-83.85
17	102	77	14.17	43.46	-158.64	-17.81	-97.36	-92.89	83.53	-426.47	83.24	-426.19	-12.07
		78	9.16	45.37	-88.77	-7.47	-35.94	65.54	8.36	-457.87	-2.40	-447.11	-69.98
		82	16.68	23.11	-102.09	2.98	-81.96	45.99	-29.08	-834.81	-31.28	-832.61	-42.05
		81	16.28	65.89	-85.70	14.74	-34.55	-71.68	-12.02	-857.66	-12.33	-857.34	-16.32
18	2	49	33.40	258.93	-345.92	-60.18	-26.81	-301.97	720.80	-420.58	690.25	-390.03	-184.21
		50	33.93	345.01	-127.85	0.42	216.73	210.24	226.93	-715.91	8.58	-497.55	-397.74
		78	43.81	241.51	-179.63	27.71	34.18	210.55	323.29	-2105.88	265.18	-2047.77	-371.19
		77	47.87	472.30	-205.55	55.12	211.62	-329.77	-99.64	-2252.72	-120.77	-2231.60	-212.22
18	27	49	9.14	90.62	-95.99	-16.23	10.87	-92.31	137.25	-140.26	137.03	-140.04	-7.76
		50	9.67	109.75	-35.01	-1.00	75.74	61.37	34.99	-194.28	5.70	-164.99	-76.53
		78	12.10	73.98	-37.16	7.96	28.86	54.58	-4.52	-625.08	-8.47	-621.13	-49.39
		77	14.85	138.32	-52.33	14.81	71.18	-91.07	2.37	-650.02	1.49	-649.14	-23.93
18	59	49	8.91	88.76	-92.17	-16.47	13.06	-89.25	138.28	-137.07	137.94	-136.74	-9.62
		50	9.95	113.23	-37.79	-1.43	76.88	64.56	37.33	-194.00	6.43	-163.10	-78.70
		78	12.29	77.44	-39.64	7.76	30.04	57.47	-3.36	-623.46	-7.64	-619.17	-51.38
		77	14.77	137.15	-48.93	14.81	73.42	-88.30	3.61	-646.77	2.59	-645.76	-25.66
18	85	49	8.78	87.64	-89.86	-16.61	14.39	-87.38	138.93	-135.16	138.50	-134.73	-10.81
		50	10.12	115.35	-39.48	-1.69	77.57	66.50	38.82	-193.90	6.89	-161.96	-80.07
		78	12.41	79.54	-41.14	7.63	30.76	59.22	-2.64	-622.49	-7.14	-617.99	-52.65
		77	14.73	136.45	-46.88	14.80	74.77	-86.62	4.37	-644.81	3.26	-643.70	-26.76
18	87	49	23.35	184.23	-242.52	-42.34	-15.95	-212.96	498.52	-297.86	478.64	-277.98	-124.25
		50	23.96	245.36	-90.48	0.06	154.83	149.03	156.02	-502.68	6.64	-353.30	-275.83
		78	30.84	171.49	-125.12	19.49	26.89	148.26	214.79	-1486.54	175.84	-1447.58	-254.48
		77	33.88	333.00	-143.23	38.72	151.05	-231.40	-66.12	-1587.52	-80.08	-1573.56	-145.05
18	97	49	22.14	177.73	-230.49	-40.37	-12.39	-203.63	469.19	-285.72	451.72	-268.25	-113.50
		50	22.95	236.62	-86.82	-0.18	149.98	143.23	145.57	-478.44	7.13	-340.00	-259.28
		78	29.44	165.13	-118.12	18.58	28.43	141.54	193.09	-1422.60	157.76	-1387.26	-236.30
		77	32.51	318.31	-135.27	36.87	146.17	-220.11	-57.36	-1516.37	-69.82	-1503.91	-134.24
18	102	49	8.78	87.64	-89.86	-16.61	14.39	-87.38	138.93	-135.16	138.50	-134.73	-10.81
		50	10.12	115.35	-39.48	-1.69	77.57	66.50	38.82	-193.90	6.89	-161.96	-80.07
		78	12.41	79.54	-41.14	7.63	30.76	59.22	-2.64	-622.49	-7.14	-617.99	-52.65
		77	14.73	136.45	-46.88	14.80	74.77	-86.62	4.37	-644.81	3.26	-643.70	-26.76
19	2	67	35.62	440.65	-29.18	-24.33	435.81	-47.44	1520.28	901.32	1291.02	1130.57	-298.90
		68	42.41	596.55	67.40	69.46	594.50	32.92	914.57	-254.54	-192.63	852.66	-261.82
		50	55.96	625.00	-96.34	55.43	473.23	294.02	385.00	-1288.63	228.99	-1132.62	-486.59
		49	54.02	774.38	-161.33	49.21	563.84	-390.74	191.94	-1273.07	149.27	-1230.40	-246.37
19	27	67	11.04	146.78	-9.11	-7.07	144.74	-17.74	338.52	220.56	244.59	314.49	-47.50
		68	12.71	185.37	18.89	19.08	185.18	5.71	272.63	16.13	20.26	268.50	-32.29
		50	15.84	194.40	-22.93	16.22	155.25	83.52	27.03	-374.71	10.48	-358.16	-79.85
		49	17.21	234.72	-46.94	14.02	173.76	-115.99	43.51	-375.37	42.81	-374.67	-17.19
19	59	67	11.22	149.70	-8.56	-7.30	148.44	-14.08	344.17	220.22	245.57	318.82	-50.00
		68	12.82	187.23	17.89	18.42	186.69	9.53	275.54	16.50	21.43	270.61	-35.38
		50	16.09	198.07	-25.38	15.87	156.83	86.68	28.94	-373.51	11.27	-355.85	-82.45
		49	17.14	235.22	-43.76	13.94	177.52	-112.99	44.82	-371.01	43.93	-370.11	-19.26
19	85	67	11.33	151.57	-8.32	-7.44	150.68	-11.85	347.66	219.99	246.20	321.45	-51.57
		68	12.89	188.43	17.20	18.02	187.61	11.85	277.35	16.71	22.17	271.89	-37.33
		50	16.25	200.30	-26.87	15.65	157.78	88.61	30.16	-372.83	11.77	-354.44	-84.09
		49	17.11	235.56	-41.86	13.89	179.81	-111.17	45.64	-368.38	44.61	-367.35	-20.58
19	87	67	25.21	313.96	-20.54	-17.21	310.63	-33.21	1056.81	633.28	893.51	796.58	-206.14
		68	29.98	422.82	47.23	48.71	421.35	23.52	646.44	-167.22	-125.46	604.69	-179.53
		50	39.46	443.35	-67.79	39.04	336.52	207.83	260.23	-908.33	154.23	-802.34	-335.60
		49	38.30	547.63	-113.10	34.66	399.87	-275.32	133.28	-897.06	105.46	-869.24	-166.99
19	97	67	24.20	303.30	-19.59	-16.49	300.19	-31.50	997.52	603.93	840.10	761.35	-192.81
		68	28.74	406.36	44.88	46.33	404.92	22.80	619.60	-148.19	-110.06	581.48	-166.79
		50	37.73	426.43	-64.67	37.28	324.49	199.18	238.27	-868.00	140.75	-770.48	-313.64
		49	36.81	525.08	-107.51	33.09	384.49	-263.01	127.33	-856.68	102.87	-832.21	-153.21
19	102	67	11.33	151.57	-8.32	-7.44	150.68	-11.85	347.66	219.99	246.20	321.45	-51.57
		68	12.89	188.43	17.20	18.02	187.61	11.85	277.35	16.71	22.17	271.89	-37.33
		50	16.25	200.30	-26.87	15.65	157.78	88.61	30.16	-372.83	11.77	-354.44	-84.09
		49	17.11	235.56	-41.86	13.89	179.81	-111.17	45.64	-368.38	44.61	-367.35	-20.58
20	2	66	152.45	2060.75	-917.04	296.47	847.25	1463.21	2371.66	882.59	2063.62	1190.62	603.16
		65	153.11	1835.50	-1008.20	113.57	713.73	-1389.82	980.67	-1463.96	-1010.21	526.92	-950.45
		68	68.76	1213.74	-236.97	163.47	813.31	648.51	720.34	202.40	273.57	649.17	-178.32

Elem.	Cmb	Nodo	Von Mises	N max	N min	N 1	N 2	N 1-2	M max	M min	M 1	M 2	M 1-2
		67	85.79	1097.30	-383.48	-28.76	742.58	-632.01	1401.25	-73.06	656.86	671.34	-737.12
20	32	66	47.47	637.31	-288.99	85.55	262.77	454.60	550.76	128.06	356.37	322.45	210.67
		65	48.02	585.21	-332.38	31.47	221.37	-448.86	361.77	-261.72	-105.99	206.04	-269.90
		68	23.13	377.81	-72.95	46.12	258.75	198.73	207.94	71.90	79.25	200.59	30.76
		67	25.02	337.21	-123.14	-8.52	222.59	-199.07	320.09	10.77	136.28	194.58	-151.89
20	64	66	48.05	646.52	-290.30	86.84	269.37	459.43	556.85	128.39	358.12	327.13	213.67
		65	47.60	582.03	-327.33	31.82	222.88	-444.53	360.07	-257.28	-104.10	206.88	-266.65
		68	23.32	381.07	-75.58	45.43	260.06	201.53	207.68	74.29	80.57	201.40	28.26
		67	25.03	339.29	-118.47	-8.18	229.00	-195.76	325.51	11.21	137.45	199.27	-154.08
20	85	66	48.41	652.11	-291.10	87.63	273.39	462.37	560.62	128.58	359.23	329.97	215.52
		65	47.35	580.10	-324.26	32.04	223.79	-441.90	359.01	-254.51	-102.90	207.40	-264.63
		68	23.44	383.05	-77.17	45.02	260.86	203.24	207.54	75.75	81.40	201.89	26.70
		67	25.04	340.60	-115.67	-7.98	232.90	-193.75	328.86	11.45	138.19	202.12	-155.45
20	87	66	108.06	1460.78	-650.17	209.33	601.29	1037.12	1651.70	609.69	1423.64	837.75	430.84
		65	108.38	1301.01	-715.37	79.98	505.66	-985.47	701.21	-1009.47	-687.19	378.93	-668.92
		68	48.96	860.23	-168.26	114.98	576.99	459.44	502.67	150.26	193.24	459.70	-115.32
		67	60.53	776.95	-271.08	-20.24	526.11	-447.18	977.64	-46.80	456.33	474.51	-512.14
20	97	66	103.86	1404.09	-624.96	200.54	578.60	996.76	1561.52	571.03	1333.14	799.41	417.19
		65	104.02	1250.39	-688.20	76.46	485.73	-947.45	679.70	-943.84	-633.33	369.19	-638.52
		68	47.27	826.69	-162.01	109.67	555.02	441.36	475.96	150.52	185.05	441.43	-100.23
		67	57.90	745.91	-259.84	-19.33	505.39	-429.01	925.99	-39.16	431.64	455.18	-482.43
20	102	66	48.41	652.11	-291.10	87.63	273.39	462.37	560.62	128.58	359.23	329.97	215.52
		65	47.35	580.10	-324.26	32.04	223.79	-441.90	359.01	-254.51	-102.90	207.40	-264.63
		68	23.44	383.05	-77.17	45.02	260.86	203.24	207.54	75.75	81.40	201.89	26.70
		67	25.04	340.60	-115.67	-7.98	232.90	-193.75	328.86	11.45	138.19	202.12	-155.45
21	2	46	81.88	1137.69	-188.08	107.95	841.65	552.12	1313.52	-25.77	323.42	964.33	588.00
		107	79.92	1178.44	-163.13	148.70	866.61	-566.67	1166.63	97.05	296.04	967.64	-416.22
		106	165.19	2092.44	-1090.57	165.63	836.24	1555.78	1352.11	-541.06	83.02	728.03	889.95
		44	166.54	2151.96	-1065.04	222.11	864.80	-1576.07	1506.70	-282.03	395.99	828.68	-867.80
21	34	46	22.96	336.70	-63.28	35.91	237.51	172.73	273.11	-31.84	54.84	186.43	137.55
		107	23.03	353.08	-70.97	43.70	238.41	-188.35	234.19	9.03	54.16	189.06	-90.14
		106	45.82	579.21	-300.55	46.11	232.55	429.89	402.57	-131.81	30.74	240.02	245.85
		44	47.30	608.77	-308.57	56.81	243.39	-449.08	433.05	-69.58	92.42	271.05	-234.91
21	66	46	23.16	339.32	-67.64	35.64	236.04	177.10	270.14	-29.20	55.45	185.48	134.81
		107	22.78	349.24	-67.14	43.73	238.38	-184.04	236.37	7.44	54.71	189.11	-92.66
		106	46.14	583.85	-305.09	46.23	232.53	434.60	400.46	-128.70	31.64	240.13	243.18
		44	46.95	603.05	-304.71	56.44	241.91	-444.31	435.39	-71.95	93.40	270.05	-237.80
21	85	46	23.28	340.93	-70.31	35.48	235.15	179.76	268.29	-27.55	55.83	184.91	133.10
		107	22.63	346.91	-64.82	43.74	238.36	-181.42	237.74	6.44	55.05	189.13	-94.24
		106	46.34	586.67	-307.85	46.30	232.52	437.46	399.16	-126.76	32.20	240.20	241.52
		44	46.74	599.58	-302.36	56.22	241.00	-441.41	436.87	-73.42	94.01	269.43	-239.59
21	87	46	57.68	803.84	-134.68	76.70	592.46	392.05	911.43	-20.84	223.06	667.54	409.74
		107	56.29	831.82	-117.33	104.97	609.52	-401.97	809.42	65.59	204.70	670.31	-290.04
		106	116.30	1473.18	-768.10	116.59	588.50	1095.52	954.57	-377.55	59.64	517.38	625.50
		44	117.25	1514.58	-750.34	155.57	608.67	-1109.57	1062.53	-197.63	276.53	588.38	-610.48
21	97	46	55.09	770.02	-130.72	73.91	565.39	377.42	857.14	-22.55	208.42	626.17	387.08
		107	53.75	796.05	-114.38	100.47	581.19	-386.59	761.14	59.63	191.63	629.14	-274.19
		106	111.02	1406.15	-733.40	111.28	561.46	1045.83	913.86	-356.99	58.29	498.58	596.07
		44	111.93	1445.18	-716.67	147.72	580.79	-1059.01	1015.96	-188.19	261.40	566.37	-582.45
21	102	46	23.28	340.93	-70.31	35.48	235.15	179.76	268.29	-27.55	55.83	184.91	133.10
		107	22.63	346.91	-64.82	43.74	238.36	-181.42	237.74	6.44	55.05	189.13	-94.24
		106	46.34	586.67	-307.85	46.30	232.52	437.46	399.16	-126.76	32.20	240.20	241.52
		44	46.74	599.58	-302.36	56.22	241.00	-441.41	436.87	-73.42	94.01	269.43	-239.59
22	2	48	52.16	842.60	-58.93	66.33	717.35	311.82	164.78	-710.69	156.01	-701.92	87.18
		108	51.73	816.17	-29.18	90.52	696.46	-294.73	74.60	-726.73	69.45	-721.58	64.05
		107	48.37	710.15	101.78	105.36	706.57	46.57	1118.77	269.35	272.08	1116.05	48.03
		46	47.73	702.01	86.50	93.03	695.48	-63.06	1191.24	543.60	545.53	1189.31	35.30
22	30	48	15.98	223.36	-25.52	21.29	176.55	97.26	-13.58	-356.11	-13.59	-356.11	0.29
		108	16.26	219.23	-29.57	26.46	163.20	-103.93	-32.14	-366.73	-37.61	-361.26	42.41
		107	11.67	171.44	26.77	27.87	170.33	-12.60	272.57	49.97	51.35	271.19	17.49
		46	11.67	167.98	23.32	23.52	167.78	-5.39	300.71	122.64	123.64	299.71	13.30
22	62	48	16.18	225.30	-29.48	21.16	174.66	101.68	-14.37	-358.92	-14.39	-358.90	-2.57
		108	15.99	215.67	-25.84	26.69	163.14	-99.64	-32.49	-366.21	-37.27	-361.43	39.66
		107	11.65	170.66	27.47	27.90	170.23	-7.80	271.98	50.94	51.87	271.06	14.27
		46	11.54	165.85	23.17	23.17	165.85	-0.46	297.49	123.90	124.47	296.91	9.98
22	85	48	16.30	226.52	-31.94	21.07	173.51	104.36	-14.82	-360.65	-14.88	-360.59	-4.38
		108	15.82	213.52	-23.59	26.83	163.10	-97.03	-32.69	-365.90	-37.07	-361.53	37.93
		107	11.64	170.33	27.74	27.91	170.16	-4.88	271.67	51.51	52.19	270.98	12.26
		46	11.46	164.72	22.92	22.96	164.67	2.53	295.58	124.62	124.98	295.21	7.90
22	87	48	36.93	591.69	-43.29	47.03	501.36	221.80	107.33	-521.33	102.02	-516.02	57.53
		108	36.59	572.32	-22.34	63.93	486.05	-209.42	45.32	-533.22	41.35	-529.26	47.75
		107	33.79	495.92	71.77	73.96	493.73	30.39	782.07	186.44	188.34	780.16	33.65
		46	33.34	489.70	60.98	65.08	485.61	-41.70	833.57	379.02	380.35	832.24	24.59
22	97	48	35.46	563.30	-43.09	45.22	474.99	213.90	94.37	-517.97	90.05	-513.64	51.26
		108	35.08	544.07	-23.08	61.22	459.77	-201.76	35.99	-529.93	31.88	-525.83	48.02

Elem.	Cmb	Nodo	Von Mises	N max	N min	N 1	N 2	N 1-2	M max	M min	M 1	M 2	M 1-2
		107	31.99	469.42	68.62	70.40	467.64	26.69	741.04	174.78	176.59	739.23	31.98
		46	31.56	463.05	58.28	61.73	459.60	-37.19	790.72	358.21	359.45	789.48	23.07
22	102	48	16.30	226.52	-31.94	21.07	173.51	104.36	-14.82	-360.65	-14.88	-360.59	-4.38
		108	15.82	213.52	-23.59	26.83	163.10	-97.03	-32.69	-365.90	-37.07	-361.53	37.93
		107	11.64	170.33	27.74	27.91	170.16	-4.88	271.67	51.51	52.19	270.98	12.26
		46	11.46	164.72	22.92	22.96	164.67	2.53	295.58	124.62	124.98	295.21	7.90
23	2	56	46.76	529.34	-106.29	35.54	387.51	264.64	121.23	-1511.93	116.46	-1507.15	88.21
		112	45.60	486.08	-76.49	41.67	367.92	-229.15	40.81	-1519.27	39.36	-1517.81	47.63
		108	31.20	487.85	-59.33	27.46	401.06	-199.89	219.81	-213.57	157.70	-151.47	151.85
		48	30.46	472.10	-91.34	8.16	372.60	214.85	372.04	-111.77	368.42	-108.15	-41.69
23	30	56	13.61	117.82	-46.93	11.20	59.70	78.73	-42.00	-626.48	-42.03	-626.46	3.44
		112	13.51	111.45	-51.95	11.40	48.11	-79.61	-65.41	-629.13	-67.06	-627.48	30.49
		108	9.85	118.67	-51.98	5.07	61.61	-80.50	5.38	-178.32	-9.39	-163.55	49.95
		48	8.49	103.52	-51.68	-0.74	52.58	72.88	54.83	-144.50	53.86	-143.53	-13.87
23	62	56	13.78	120.67	-51.43	11.12	58.12	82.78	-43.02	-629.15	-43.02	-629.15	1.32
		112	13.28	107.51	-47.92	11.61	47.98	-75.55	-65.20	-629.17	-66.63	-627.74	28.35
		108	9.47	114.47	-47.68	5.30	61.49	-76.05	4.37	-177.28	-9.08	-163.84	47.56
		48	8.83	106.69	-56.37	-0.69	51.00	77.32	55.83	-147.48	54.53	-146.18	-16.21
23	85	56	13.89	122.41	-54.18	11.07	57.16	85.24	-43.63	-630.78	-43.63	-630.78	-0.04
		112	13.15	105.11	-45.47	11.73	47.90	-73.09	-65.07	-629.20	-66.37	-627.91	26.99
		108	9.25	111.93	-45.07	5.44	61.42	-73.34	3.75	-176.65	-8.89	-164.01	46.04
		48	9.04	108.64	-59.25	-0.66	50.05	80.03	56.48	-149.32	54.94	-147.79	-17.70
23	87	56	33.01	368.64	-77.50	25.17	265.96	187.79	74.79	-1091.84	71.82	-1088.87	58.80
		112	32.14	337.40	-56.39	29.34	251.67	-162.51	18.51	-1096.72	17.39	-1095.59	35.35
		108	22.01	339.43	-44.83	19.03	275.56	-143.04	146.72	-165.62	103.95	-122.85	107.37
		48	21.47	328.39	-67.97	5.35	255.07	153.90	255.56	-94.42	252.94	-91.80	-30.15
23	97	56	31.60	348.01	-76.64	24.17	247.20	180.68	61.56	-1068.67	59.07	-1066.18	52.97
		112	30.72	317.43	-56.36	28.01	233.06	-156.26	7.45	-1073.14	6.29	-1071.97	35.43
		108	21.04	320.13	-45.83	17.88	256.42	-138.77	132.09	-172.99	92.13	-133.03	102.92
		48	20.53	309.68	-68.52	4.73	236.43	149.46	238.01	-105.29	235.43	-102.71	-29.62
23	102	56	13.89	122.41	-54.18	11.07	57.16	85.24	-43.63	-630.78	-43.63	-630.78	-0.04
		112	13.15	105.11	-45.47	11.73	47.90	-73.09	-65.07	-629.20	-66.37	-627.91	26.99
		108	9.25	111.93	-45.07	5.44	61.42	-73.34	3.75	-176.65	-8.89	-164.01	46.04
		48	9.04	108.64	-59.25	-0.66	50.05	80.03	56.48	-149.32	54.94	-147.79	-17.70
24	2	64	39.77	271.11	-199.38	23.59	48.14	234.93	85.60	-2181.37	83.66	-2179.43	66.33
		116	38.54	218.83	-174.19	19.47	25.17	-196.49	29.61	-2189.30	28.13	-2187.81	57.41
		112	30.33	258.57	-206.35	-18.44	70.66	-228.15	152.36	-981.11	137.94	-966.69	127.01
		56	30.06	266.53	-262.03	-28.48	32.98	262.49	275.38	-947.45	275.23	-947.30	-13.60
24	33	64	16.04	48.16	-96.02	6.52	-54.38	65.34	-69.07	-844.19	-69.08	-844.19	-2.67
		116	16.12	43.08	-103.97	3.96	-64.85	-64.98	-88.01	-844.77	-89.11	-843.67	28.83
		112	10.67	57.59	-114.37	-8.04	-48.74	-83.53	-33.65	-452.29	-37.80	-448.14	41.48
		56	11.72	50.47	-122.54	-10.85	-61.22	82.75	8.81	-436.27	8.71	-436.17	-6.67
24	65	64	16.20	51.33	-99.83	6.56	-55.06	69.02	-68.06	-845.74	-68.09	-845.71	-4.69
		116	16.02	40.00	-100.49	4.12	-64.61	-61.27	-87.52	-844.05	-88.47	-843.10	26.77
		112	10.50	53.99	-110.31	-7.84	-48.49	-79.59	-33.45	-451.33	-37.20	-447.58	39.42
		56	11.94	54.01	-126.70	-10.80	-61.89	86.67	9.84	-437.87	9.67	-437.70	-8.69
24	85	64	16.29	53.27	-102.16	6.58	-55.47	71.25	-67.43	-846.68	-67.48	-846.64	-5.97
		116	15.97	38.15	-98.40	4.21	-64.46	-59.01	-87.21	-843.61	-88.07	-842.75	25.46
		112	10.39	51.80	-107.85	-7.71	-48.33	-77.20	-33.33	-450.74	-36.84	-447.24	38.10
		56	12.08	56.16	-129.23	-10.77	-62.29	89.04	10.48	-438.84	10.26	-438.62	-9.98
24	87	64	28.00	186.82	-145.52	16.60	24.70	166.12	47.95	-1567.01	46.78	-1565.84	43.42
		116	27.08	149.75	-128.02	13.54	8.19	-138.86	8.11	-1572.01	7.01	-1570.91	41.67
		112	21.36	178.29	-150.95	-13.32	40.66	-162.39	97.10	-714.15	87.05	-704.09	89.75
		56	21.18	184.27	-191.01	-20.42	13.68	186.87	184.98	-690.14	184.86	-690.02	-10.39
24	97	64	27.19	174.51	-144.02	15.84	14.65	159.27	34.28	-1525.93	33.34	-1524.99	38.29
		116	25.79	138.89	-127.59	12.76	-1.45	-133.05	-4.89	-1530.25	-5.99	-1529.15	40.95
		112	20.39	166.66	-149.71	-13.05	29.99	-156.72	82.56	-704.41	73.06	-694.91	85.96
		56	20.25	172.73	-188.79	-19.86	3.80	180.37	168.31	-681.02	168.18	-680.88	-10.73
24	102	64	16.29	53.27	-102.16	6.58	-55.47	71.25	-67.43	-846.68	-67.48	-846.64	-5.97
		116	15.97	38.15	-98.40	4.21	-64.46	-59.01	-87.21	-843.61	-88.07	-842.75	25.46
		112	10.39	51.80	-107.85	-7.71	-48.33	-77.20	-33.33	-450.74	-36.84	-447.24	38.10
		56	12.08	56.16	-129.23	-10.77	-62.29	89.04	10.48	-438.84	10.26	-438.62	-9.98
25	2	72	59.17	130.15	-375.19	20.71	-265.75	208.15	54.90	-2775.46	53.69	-2774.25	58.49
		120	58.42	90.46	-369.73	12.98	-292.25	-172.20	23.08	-2785.77	21.77	-2784.46	60.71
		116	40.81	99.64	-379.25	-34.35	-245.25	-214.98	127.21	-1693.51	120.84	-1687.14	107.48
		64	45.48	120.78	-441.42	-39.44	-281.20	253.78	207.66	-1676.10	207.66	-1676.10	2.38
25	49	72	23.14	22.55	-173.21	4.64	-155.31	56.43	-88.42	-1028.62	-88.51	-1028.53	-8.99
		120	23.10	14.70	-177.25	1.16	-163.70	-49.15	-107.93	-1025.35	-108.57	-1024.71	24.24
		116	17.87	17.61	-178.41	-12.33	-148.48	-70.51	-60.09	-691.82	-61.59	-690.31	30.77
		64	19.10	21.16	-196.37	-13.55	-161.65	79.67	-27.06	-685.82	-27.09	-685.79	-4.64
25	81	72	23.08	23.22	-172.96	4.66	-154.40	57.42	-87.84	-1026.49	-87.94	-1026.39	-9.64
		120	23.03	14.28	-176.01	1.19	-162.92	-48.16	-107.47	-1023.60	-108.08	-1022.99	23.56
		116	17.79	17.04	-177.02	-12.29	-147.69	-69.50	-59.65	-690.04	-61.09	-688.59	30.14
		64	19.05	22.06	-196.34	-13.53	-160.75	80.67	-26.47	-683.68	-26.51	-683.64	-5.25
25	85	72	23.04	23.63	-172.81	4.67	-153.84	58.01	-87.49	-1025.18	-87.59	-1025.07	-10.05

Elem.	Cmb	Nodo	Von Mises	N max	N min	N 1	N 2	N 1-2	M max	M min	M 1	M 2	M 1-2
		120	22.98	14.02	-175.25	1.21	-162.44	-47.55	-107.19	-1022.51	-107.77	-1021.93	23.13
		116	17.74	16.69	-176.16	-12.27	-147.21	-68.89	-59.37	-688.93	-60.78	-687.52	29.74
		64	19.03	22.62	-196.32	-13.52	-160.19	81.28	-26.10	-682.36	-26.15	-682.31	-5.63
25	87	72	42.49	89.23	-272.49	14.43	-197.68	146.50	24.82	-1986.88	24.12	-1986.18	37.65
		120	41.99	61.59	-269.26	8.82	-216.49	-121.14	1.10	-1993.51	0.14	-1992.56	43.56
		116	29.55	68.05	-275.72	-24.54	-183.13	-152.50	76.88	-1220.85	72.46	-1216.43	75.62
		64	32.83	82.97	-319.89	-28.09	-208.83	180.03	134.95	-1208.37	134.95	-1208.37	0.84
25	97	72	41.37	82.95	-268.28	13.62	-198.96	139.80	10.78	-1928.25	10.23	-1927.71	32.53
		120	40.92	56.83	-265.81	8.10	-217.07	-115.53	-13.89	-1934.09	-14.83	-1933.16	42.36
		116	29.01	63.00	-271.72	-23.77	-184.95	-146.68	60.82	-1193.06	56.66	-1188.90	72.09
		64	32.13	77.28	-314.28	-27.14	-209.86	173.15	118.36	-1180.75	118.36	-1180.75	7.77e-04
25	102	72	23.04	23.63	-172.81	4.67	-153.84	58.01	-87.49	-1025.18	-87.59	-1025.07	-10.05
		120	22.98	14.02	-175.25	1.21	-162.44	-47.55	-107.19	-1022.51	-107.77	-1021.93	23.13
		116	17.74	16.69	-176.16	-12.27	-147.21	-68.89	-59.37	-688.93	-60.78	-687.52	29.74
		64	19.03	22.62	-196.32	-13.52	-160.19	81.28	-26.10	-682.36	-26.15	-682.31	-5.63
26	2	80	79.49	74.12	-601.12	20.43	-547.43	182.67	26.84	-3299.19	25.67	-3298.03	62.33
		124	79.87	48.76	-612.91	12.92	-577.07	-149.77	31.87	-3310.87	30.74	-3309.74	61.26
		120	63.27	32.23	-599.81	-34.61	-532.97	-194.36	106.74	-2340.65	103.16	-2337.07	93.56
		72	66.49	49.18	-649.88	-38.11	-562.58	231.09	159.65	-2326.48	159.54	-2326.37	16.93
26	45	80	28.98	11.13	-245.08	3.48	-237.42	43.61	-104.20	-1171.31	-104.31	-1171.20	-10.80
		124	29.02	5.88	-250.88	0.06	-245.07	-38.20	-125.58	-1169.52	-126.01	-1169.09	21.11
		120	24.59	2.81	-247.52	-12.41	-232.30	-59.82	-84.16	-896.26	-84.84	-895.58	23.59
		72	25.49	5.75	-261.54	-12.78	-243.01	67.89	-56.40	-891.54	-56.41	-891.54	-1.76
26	77	80	28.92	11.49	-244.52	3.52	-236.55	44.46	-103.66	-1169.37	-103.78	-1169.25	-11.46
		124	28.96	5.67	-249.87	0.09	-244.29	-37.34	-125.11	-1167.77	-125.51	-1167.37	20.40
		120	24.52	2.49	-246.40	-12.39	-231.52	-58.99	-83.72	-894.51	-84.37	-893.86	22.87
		72	25.44	6.27	-261.14	-12.74	-242.13	68.71	-55.87	-889.58	-55.88	-889.58	-2.42
26	85	80	28.88	11.72	-244.17	3.55	-236.00	44.98	-103.32	-1168.16	-103.45	-1168.03	-11.87
		124	28.92	5.54	-249.25	0.10	-243.81	-36.82	-124.81	-1166.68	-125.20	-1166.30	19.96
		120	24.47	2.29	-245.70	-12.37	-231.04	-58.49	-83.44	-893.42	-84.07	-892.79	22.43
		72	25.40	6.58	-260.89	-12.72	-241.59	69.21	-55.54	-888.36	-55.55	-888.35	-2.84
26	87	80	56.82	50.62	-432.95	14.09	-396.42	127.78	4.00	-2355.10	3.32	-2354.42	39.97
		124	57.09	33.00	-441.60	8.63	-417.22	-104.76	4.60	-2362.80	3.80	-2362.00	43.50
		120	45.44	21.57	-432.41	-24.72	-386.12	-137.38	60.02	-1679.54	57.56	-1677.08	65.36
		72	47.70	33.40	-467.77	-27.10	-407.27	163.29	99.02	-1669.43	98.95	-1669.36	10.91
26	97	80	55.07	46.85	-422.75	13.17	-389.07	121.16	-10.11	-2279.21	-10.63	-2278.69	34.36
		124	55.33	30.24	-431.33	7.78	-408.87	-99.32	-13.12	-2286.19	-13.89	-2285.41	41.89
		120	44.23	19.52	-422.59	-23.95	-379.12	-131.64	42.38	-1633.86	40.09	-1631.57	61.87
		72	46.40	30.73	-456.47	-26.13	-399.60	156.44	82.03	-1623.89	81.98	-1623.84	9.46
26	102	80	28.88	11.72	-244.17	3.55	-236.00	44.98	-103.32	-1168.16	-103.45	-1168.03	-11.87
		124	28.92	5.54	-249.25	0.10	-243.81	-36.82	-124.81	-1166.68	-125.20	-1166.30	19.96
		120	24.47	2.29	-245.70	-12.37	-231.04	-58.49	-83.44	-893.42	-84.07	-892.79	22.43
		72	25.40	6.58	-260.89	-12.72	-241.59	69.21	-55.54	-888.36	-55.55	-888.35	-2.84
27	2	52	97.75	49.42	-824.97	19.72	-795.27	158.39	-7.05	-3755.20	-8.42	-3753.83	71.71
		110	99.22	32.54	-848.20	13.85	-829.52	-126.90	75.53	-3760.34	74.40	-3759.22	65.68
		124	84.14	8.67	-825.17	-28.65	-787.85	-172.41	99.70	-2918.94	97.52	-2916.76	81.05
		80	86.31	18.64	-861.87	-32.52	-810.71	205.99	126.04	-2904.51	125.54	-2904.01	38.99
27	45	52	33.65	5.49	-306.32	2.39	-303.22	30.96	-115.74	-1278.89	-115.85	-1278.79	-11.16
		110	33.69	1.87	-311.87	-0.55	-309.45	-27.45	-139.78	-1278.50	-140.04	-1278.24	17.36
		124	30.19	-2.67	-307.64	-10.73	-299.59	-48.90	-106.25	-1066.11	-106.56	-1065.80	17.24
		80	30.86	-0.77	-317.70	-10.67	-307.81	55.13	-79.65	-1061.50	-79.65	-1061.50	0.62
27	77	52	33.58	5.72	-305.56	2.45	-302.30	31.70	-115.17	-1277.15	-115.29	-1277.03	-11.76
		110	33.63	1.78	-311.05	-0.52	-308.75	-26.72	-139.28	-1276.92	-139.52	-1276.67	16.72
		124	30.14	-2.86	-306.75	-10.72	-298.89	-48.23	-105.81	-1064.54	-106.10	-1064.25	16.55
		80	30.80	-0.46	-317.05	-10.62	-306.89	55.80	-79.15	-1059.75	-79.15	-1059.75	-0.02
27	85	52	33.55	5.85	-305.09	2.49	-301.73	32.15	-114.82	-1276.07	-114.95	-1275.94	-12.13
		110	33.60	1.72	-310.54	-0.51	-308.31	-26.27	-138.96	-1275.93	-139.20	-1275.70	16.32
		124	30.10	-2.97	-306.20	-10.71	-298.46	-47.82	-105.53	-1063.55	-105.81	-1063.28	16.12
		80	30.76	-0.26	-316.65	-10.59	-306.32	56.21	-78.83	-1058.66	-78.83	-1058.66	-0.42
27	87	52	69.62	33.47	-590.40	13.48	-570.41	109.88	-20.13	-2673.48	-20.94	-2672.68	46.19
		110	70.61	21.77	-606.73	9.17	-594.12	-88.10	31.82	-2677.02	31.04	-2676.24	45.96
		124	60.10	5.28	-590.83	-20.53	-565.03	-121.32	52.38	-2087.76	50.91	-2086.28	56.19
		80	61.63	12.24	-616.65	-23.09	-581.31	144.82	73.50	-2077.47	73.18	-2077.16	25.94
27	97	52	67.23	30.70	-572.89	12.47	-554.66	103.30	-33.40	-2580.52	-34.02	-2579.89	39.92
		110	68.13	19.70	-588.42	8.18	-576.91	-82.89	9.47	-2583.93	8.74	-2583.20	43.61
		124	58.20	4.25	-573.56	-19.95	-549.37	-115.73	32.51	-2024.53	31.15	-2023.17	52.75
		80	59.67	10.85	-598.19	-22.23	-565.11	138.04	55.89	-2014.43	55.63	-2014.17	23.32
27	102	52	33.55	5.85	-305.09	2.49	-301.73	32.15	-114.82	-1276.07	-114.95	-1275.94	-12.13
		110	33.60	1.72	-310.54	-0.51	-308.31	-26.27	-138.96	-1275.93	-139.20	-1275.70	16.32
		124	30.10	-2.97	-306.20	-10.71	-298.46	-47.82	-105.53	-1063.55	-105.81	-1063.28	16.12
		80	30.76	-0.26	-316.65	-10.59	-306.32	56.21	-78.83	-1058.66	-78.83	-1058.66	-0.42
28	2	62	113.36	34.55	-1025.14	17.12	-1007.72	134.76	-64.43	-4148.27	-66.01	-4146.68	80.49
		115	116.31	22.34	-1060.90	12.64	-1051.20	-102.08	179.58	-4125.88	178.07	-4124.37	80.62
		110	102.78	0.96	-1030.35	-21.25	-1008.14	-149.71	122.75	-3426.24	121.52	-3425.00	66.21
		52	104.04	4.97	-1058.55	-27.05	-1026.53	181.74	98.89	-3411.51	97.28	-3409.90	75.15

Elem.	Cmb	Nodo	Von Mises	N max	N min	N 1	N 2	N 1-2	M max	M min	M 1	M 2	M 1-2
28	51	62	37.01	2.49	-352.60	1.33	-351.45	20.25	-121.92	-1350.51	-122.04	-1350.39	-12.45
		115	37.05	-0.59	-357.64	-1.22	-357.01	-14.98	-148.76	-1352.07	-148.87	-1351.96	11.36
		110	34.54	-4.71	-353.95	-8.57	-350.08	-36.54	-124.46	-1200.62	-124.54	-1200.54	9.33
		52	34.99	-2.58	-360.29	-8.02	-354.84	43.81	-96.80	-1195.29	-96.80	-1195.29	0.92
28	83	62	36.98	2.39	-352.35	1.28	-351.24	19.79	-122.01	-1349.62	-122.12	-1349.51	-11.85
		115	37.01	-0.54	-357.13	-1.21	-356.46	-15.46	-148.78	-1350.93	-148.90	-1350.81	12.01
		110	34.50	-4.65	-353.49	-8.60	-349.53	-36.93	-124.41	-1199.46	-124.51	-1199.37	10.05
		52	34.96	-2.75	-360.01	-8.12	-354.64	43.44	-96.82	-1194.40	-96.82	-1194.40	1.58
28	85	62	36.96	2.33	-352.18	1.25	-351.10	19.51	-122.07	-1349.07	-122.18	-1348.96	-11.48
		115	36.98	-0.51	-356.81	-1.20	-356.11	-15.75	-148.79	-1350.22	-148.92	-1350.09	12.41
		110	34.47	-4.61	-353.20	-8.61	-349.19	-37.16	-124.39	-1198.75	-124.49	-1198.65	10.49
		52	34.95	-2.86	-359.83	-8.17	-354.52	43.22	-96.83	-1193.84	-96.83	-1193.84	1.99
28	87	62	80.48	23.10	-730.15	11.58	-718.63	92.44	-59.36	-2945.26	-60.30	-2944.32	52.13
		115	82.45	14.72	-754.73	8.27	-748.28	-70.15	99.87	-2930.61	98.86	-2929.59	55.40
		110	73.11	-0.04	-733.93	-15.31	-718.66	-104.76	65.24	-2443.98	64.41	-2443.15	45.54
		52	74.01	2.81	-753.55	-19.12	-731.62	126.92	52.96	-2433.47	51.94	-2432.45	50.36
28	97	62	77.47	20.90	-705.11	10.60	-694.81	85.87	-69.68	-2835.10	-70.43	-2834.36	45.35
		115	79.25	13.07	-727.99	7.27	-722.19	-65.29	69.38	-2822.32	68.46	-2821.40	51.58
		110	70.50	-0.73	-708.81	-14.96	-694.58	-99.37	41.52	-2363.63	40.77	-2362.88	42.41
		52	71.38	2.03	-727.34	-18.33	-706.98	120.15	34.93	-2353.30	34.06	-2352.43	45.63
28	102	62	36.96	2.33	-352.18	1.25	-351.10	19.51	-122.07	-1349.07	-122.18	-1348.96	-11.48
		115	36.98	-0.51	-356.81	-1.20	-356.11	-15.75	-148.79	-1350.22	-148.92	-1350.09	12.41
		110	34.47	-4.61	-353.20	-8.61	-349.19	-37.16	-124.39	-1198.75	-124.49	-1198.65	10.49
		52	34.95	-2.86	-359.83	-8.17	-354.52	43.22	-96.83	-1193.84	-96.83	-1193.84	1.99
29	2	74	125.95	22.06	-1192.45	12.06	-1182.45	109.74	-175.52	-4488.48	-177.05	-4486.95	81.36
		121	131.07	10.79	-1246.64	6.49	-1242.34	-73.40	377.76	-4391.67	375.12	-4389.03	112.31
		115	119.04	-1.40	-1205.06	-14.65	-1191.81	-125.60	198.84	-3861.54	198.32	-3861.02	45.93
		62	119.29	-3.32	-1232.13	-24.21	-1211.23	158.88	63.09	-3847.69	58.69	-3843.29	131.18
29	51	74	39.12	0.02	-384.24	-0.13	-384.10	7.42	-124.77	-1387.80	-124.87	-1387.70	-10.98
		121	39.11	-2.10	-388.05	-2.16	-387.99	-4.75	-153.61	-1390.76	-153.65	-1390.71	7.55
		115	37.61	-4.74	-385.71	-6.56	-383.89	-26.27	-138.85	-1300.01	-138.86	-1299.99	4.39
		62	37.90	-3.24	-388.63	-5.70	-386.17	30.68	-109.88	-1294.70	-109.89	-1294.69	3.50
29	83	74	39.11	-0.05	-384.31	-0.18	-384.18	7.16	-125.02	-1387.49	-125.11	-1387.40	-10.56
		121	39.08	-2.09	-387.70	-2.16	-387.64	-5.04	-153.77	-1390.05	-153.82	-1390.00	8.01
		115	37.58	-4.75	-385.39	-6.59	-383.55	-26.44	-138.95	-1299.29	-138.98	-1299.27	4.95
		62	37.90	-3.37	-388.70	-5.80	-386.26	30.53	-110.07	-1294.39	-110.09	-1294.38	4.02
29	85	74	39.11	-0.09	-384.35	-0.21	-384.22	7.00	-125.18	-1387.29	-125.26	-1387.20	-10.31
		121	39.06	-2.08	-387.48	-2.15	-387.41	-5.21	-153.86	-1389.61	-153.92	-1389.56	8.29
		115	37.56	-4.75	-385.19	-6.61	-383.33	-26.55	-139.02	-1298.85	-139.05	-1298.83	5.29
		62	37.89	-3.44	-388.73	-5.86	-386.31	30.44	-110.19	-1294.19	-110.20	-1294.18	4.34
29	87	74	89.16	14.44	-845.96	8.01	-839.53	74.09	-133.82	-3177.18	-134.74	-3176.26	52.86
		121	92.57	6.82	-882.66	4.04	-879.88	-49.63	231.28	-3113.02	229.56	-3111.29	75.98
		115	84.35	-1.62	-854.67	-10.65	-845.65	-87.27	114.02	-2747.53	113.67	-2747.19	31.33
		62	84.56	-2.80	-873.12	-16.92	-859.00	109.98	27.24	-2737.56	24.43	-2734.75	88.03
29	97	74	85.58	12.76	-813.73	7.18	-808.16	67.65	-137.11	-3049.07	-137.84	-3048.34	46.17
		121	88.64	5.76	-847.34	3.34	-844.92	-45.37	186.93	-2991.85	185.41	-2990.32	69.54
		115	81.04	-2.16	-821.86	-10.49	-813.54	-82.18	83.43	-2650.53	83.13	-2650.22	28.92
		62	81.28	-3.10	-838.90	-16.03	-825.97	103.15	9.89	-2640.65	7.48	-2638.24	79.85
29	102	74	39.11	-0.09	-384.35	-0.21	-384.22	7.00	-125.18	-1387.29	-125.26	-1387.20	-10.31
		121	39.06	-2.08	-387.48	-2.15	-387.41	-5.21	-153.86	-1389.61	-153.92	-1389.56	8.29
		115	37.56	-4.75	-385.19	-6.61	-383.33	-26.55	-139.02	-1298.85	-139.05	-1298.83	5.29
		62	37.89	-3.44	-388.73	-5.86	-386.31	30.44	-110.19	-1294.19	-110.20	-1294.18	4.34
30	2	84	135.51	9.57	-1323.24	5.17	-1318.84	76.46	-377.40	-4797.45	-378.26	-4796.59	61.78
		126	143.01	-7.14	-1397.73	-8.15	-1396.72	-37.49	702.53	-4530.29	697.56	-4525.31	161.32
		121	132.79	-3.36	-1341.29	-10.80	-1333.85	-99.49	360.65	-4223.06	360.58	-4222.98	18.45
		74	131.68	-11.43	-1379.25	-25.26	-1365.42	136.81	-10.63	-4213.94	-21.14	-4203.43	209.95
30	39	84	39.95	-1.74	-400.62	-1.80	-400.56	-5.04	-123.61	-1390.35	-123.67	-1390.29	-8.78
		126	39.87	-3.37	-402.64	-3.45	-402.56	5.73	-153.57	-1394.53	-153.58	-1394.51	3.91
		121	39.37	-4.23	-401.85	-4.86	-401.22	-15.77	-148.50	-1364.27	-148.50	-1364.27	0.21
		74	39.55	-2.77	-402.04	-3.59	-401.22	18.07	-118.71	-1359.39	-118.74	-1359.36	6.30
30	71	84	39.97	-1.79	-400.98	-1.86	-400.91	-5.30	-123.99	-1390.65	-124.05	-1390.58	-8.76
		126	39.86	-3.33	-402.51	-3.40	-402.43	5.49	-153.85	-1394.33	-153.87	-1394.31	3.93
		121	39.36	-4.22	-401.73	-4.86	-401.10	-15.89	-148.77	-1364.07	-148.77	-1364.07	0.34
		74	39.56	-2.89	-402.40	-3.70	-401.59	17.93	-119.07	-1359.68	-119.10	-1359.65	6.42
30	85	84	39.98	-1.82	-401.20	-1.89	-401.13	-5.46	-124.22	-1390.82	-124.28	-1390.76	-8.75
		126	39.85	-3.30	-402.42	-3.37	-402.35	5.34	-154.03	-1394.20	-154.04	-1394.19	3.95
		121	39.35	-4.22	-401.66	-4.86	-401.02	-15.96	-148.93	-1363.94	-148.93	-1363.94	0.42
		74	39.57	-2.97	-402.61	-3.77	-401.81	17.85	-119.30	-1359.86	-119.33	-1359.83	6.50
30	87	84	95.66	5.89	-935.40	3.20	-932.71	50.25	-268.23	-3383.68	-268.75	-3383.16	40.02
		126	100.62	-5.28	-985.39	-5.88	-984.79	-24.28	447.70	-3205.96	444.50	-3202.76	108.07
		121	93.75	-2.86	-947.69	-7.85	-942.70	-68.46	220.58	-2997.23	220.53	-2997.18	12.35
		74	93.04	-8.17	-973.02	-17.34	-963.86	93.59	-23.31	-2990.30	-30.01	-2983.60	140.83
30	97	84	91.55	4.82	-896.53	2.62	-894.33	44.48	-257.91	-3235.45	-258.32	-3235.04	34.83
		126	95.98	-5.28	-941.85	-5.76	-941.37	-21.12	381.61	-3076.05	378.84	-3073.28	97.83
		121	89.74	-3.21	-907.83	-7.73	-903.31	-63.79	177.99	-2884.17	177.95	-2884.13	11.18

Elem.	Cmb	Nodo	Von Mises	N max	N min	N 1	N 2	N 1-2	M max	M min	M 1	M 2	M 1-2
		74	89.14	-7.91	-930.68	-16.12	-922.46	86.67	-37.01	-2876.94	-42.76	-2871.19	127.66
30	102	84	39.98	-1.82	-401.20	-1.89	-401.13	-5.46	-124.22	-1390.82	-124.28	-1390.76	-8.75
		126	39.85	-3.30	-402.42	-3.37	-402.35	5.34	-154.03	-1394.20	-154.04	-1394.19	3.95
		121	39.35	-4.22	-401.66	-4.86	-401.02	-15.96	-148.93	-1363.94	-148.93	-1363.94	0.42
		74	39.57	-2.97	-402.61	-3.77	-401.81	17.85	-119.30	-1359.86	-119.33	-1359.83	6.50
31	2	60	143.65	-4.97	-1431.75	-5.08	-1431.64	12.65	-679.02	-5133.12	-679.04	-5133.11	7.79
		114	150.44	-29.59	-1485.37	-29.76	-1485.20	15.78	1125.24	-4527.48	1118.99	-4521.22	187.94
		126	143.57	-11.70	-1427.02	-15.62	-1423.10	-74.38	649.16	-4504.80	649.14	-4504.78	-10.24
		84	140.85	-16.55	-1494.16	-25.43	-1485.28	114.17	-177.16	-4523.72	-197.23	-4503.65	294.65
31	34	60	39.72	-3.48	-405.23	-4.23	-404.48	-17.34	-121.52	-1362.85	-121.57	-1362.80	-7.89
		114	39.35	-4.06	-401.70	-4.75	-401.01	16.50	-151.02	-1364.47	-151.02	-1364.47	-1.72
		126	39.85	-3.23	-402.46	-3.28	-402.41	-4.13	-155.78	-1394.65	-155.79	-1394.64	-4.71
		84	40.13	-2.24	-403.84	-2.35	-403.73	6.64	-126.70	-1394.03	-126.75	-1393.98	7.88
31	66	60	39.63	-3.17	-403.62	-3.95	-402.83	-17.71	-120.12	-1360.91	-120.16	-1360.87	-7.25
		114	39.35	-4.16	-401.64	-4.82	-400.99	16.13	-149.93	-1364.18	-149.93	-1364.18	-1.04
		126	39.85	-3.28	-402.45	-3.34	-402.39	-4.91	-154.64	-1394.35	-154.65	-1394.33	-4.38
		84	40.04	-1.98	-402.17	-2.06	-402.08	5.85	-125.24	-1392.09	-125.29	-1392.04	8.18
31	85	60	39.57	-2.97	-402.64	-3.78	-401.83	-17.94	-119.25	-1359.72	-119.29	-1359.68	-6.86
		114	39.35	-4.22	-401.61	-4.86	-400.97	15.91	-149.25	-1363.99	-149.25	-1363.99	-0.62
		126	39.85	-3.31	-402.45	-3.38	-402.37	-5.39	-153.93	-1394.15	-153.94	-1394.14	-4.18
		84	39.98	-1.81	-401.15	-1.88	-401.08	5.37	-124.34	-1390.90	-124.39	-1390.85	8.37
31	87	60	101.03	-3.85	-1008.04	-3.89	-1008.00	6.04	-468.59	-3603.37	-468.60	-3603.37	4.28
		114	105.49	-20.33	-1043.75	-20.49	-1043.60	12.64	730.09	-3200.01	726.09	-3196.01	125.21
		126	101.00	-8.32	-1004.93	-10.86	-1002.38	-50.31	412.25	-3189.08	412.23	-3189.07	-7.39
		84	99.20	-11.49	-1049.38	-17.20	-1043.67	76.83	-135.29	-3200.67	-148.07	-3187.88	197.55
31	97	60	96.34	-4.01	-962.20	-4.02	-962.19	2.98	-437.50	-3428.97	-437.51	-3428.97	2.91
		114	100.28	-18.92	-994.30	-19.10	-994.11	13.56	636.36	-3066.50	632.93	-3063.07	112.63
		126	96.32	-8.01	-959.44	-10.24	-957.21	-46.01	349.82	-3060.97	349.80	-3060.96	-7.21
		84	94.73	-10.77	-999.16	-15.74	-994.19	69.89	-138.75	-3070.26	-149.72	-3059.29	178.96
31	102	60	39.57	-2.97	-402.64	-3.78	-401.83	-17.94	-119.25	-1359.72	-119.29	-1359.68	-6.86
		114	39.35	-4.22	-401.61	-4.86	-400.97	15.91	-149.25	-1363.99	-149.25	-1363.99	-0.62
		126	39.85	-3.31	-402.45	-3.38	-402.37	-5.39	-153.93	-1394.15	-153.94	-1394.14	-4.18
		84	39.98	-1.81	-401.15	-1.88	-401.08	5.37	-124.34	-1390.90	-124.39	-1390.85	8.37
32	2	76	144.22	-16.83	-1494.17	-20.70	-1490.31	-75.46	-760.29	-5018.12	-763.33	-5015.08	-113.63
		122	150.73	-42.36	-1491.13	-46.62	-1486.86	78.49	1361.42	-4415.74	1357.19	-4411.51	156.24
		114	149.83	-25.22	-1456.59	-26.27	-1455.54	-38.62	1058.92	-4610.87	1057.74	-4609.69	-81.68
		60	146.72	-17.05	-1524.01	-20.05	-1521.02	67.10	-520.00	-4978.41	-539.80	-4958.60	296.47
32	26	76	38.03	-4.06	-391.11	-6.34	-388.84	-29.57	-112.15	-1296.89	-112.19	-1296.85	-7.09
		122	37.56	-4.69	-385.43	-6.68	-383.44	27.46	-141.06	-1299.61	-141.12	-1299.55	-8.06
		114	39.07	-2.16	-387.73	-2.27	-387.61	6.76	-155.74	-1390.32	-155.83	-1390.23	-10.52
		60	39.25	-0.57	-386.75	-0.65	-386.68	-5.50	-127.61	-1390.22	-127.66	-1390.17	8.08
32	58	76	37.94	-3.68	-389.64	-6.05	-387.26	-30.16	-110.96	-1295.10	-110.98	-1295.07	-5.58
		122	37.56	-4.73	-385.23	-6.64	-383.32	26.86	-140.14	-1299.18	-140.17	-1299.14	-6.45
		114	39.06	-2.12	-387.58	-2.20	-387.49	5.77	-154.66	-1389.85	-154.73	-1389.78	-9.28
		60	39.16	-0.26	-385.21	-0.37	-385.10	-6.49	-126.22	-1388.42	-126.29	-1388.36	9.22
32	85	76	37.89	-3.45	-388.74	-5.88	-386.30	-30.53	-110.21	-1294.00	-110.23	-1293.98	-4.66
		122	37.55	-4.76	-385.11	-6.61	-383.25	26.50	-139.56	-1298.91	-139.58	-1298.88	-5.46
		114	39.06	-2.09	-387.48	-2.16	-387.42	5.16	-153.98	-1389.57	-154.04	-1389.51	-8.52
		60	39.11	-0.08	-384.28	-0.21	-384.15	-7.09	-125.36	-1387.32	-125.44	-1387.24	9.91
32	87	76	101.20	-11.72	-1047.91	-14.58	-1045.05	-54.37	-521.64	-3517.87	-523.58	-3515.92	-76.37
		122	105.43	-28.89	-1045.42	-31.96	-1042.34	55.86	888.85	-3116.86	886.18	-3114.19	103.43
		114	105.04	-17.17	-1022.64	-17.80	-1022.02	-25.06	685.40	-3259.18	684.62	-3258.40	-55.59
		60	103.00	-11.57	-1067.05	-13.39	-1065.23	43.79	-363.93	-3503.36	-376.59	-3490.70	198.97
32	97	76	96.26	-11.06	-996.28	-13.93	-993.41	-53.11	-484.08	-3342.96	-485.77	-3341.27	-69.38
		122	99.97	-26.66	-993.57	-29.67	-990.55	53.90	780.59	-2982.79	778.32	-2980.52	92.36
		114	99.84	-15.82	-973.33	-16.31	-972.83	-21.84	595.64	-3123.42	594.94	-3122.72	-51.18
		60	98.03	-10.60	-1012.76	-12.08	-1011.28	38.44	-344.63	-3342.24	-355.54	-3331.34	180.45
32	102	76	37.89	-3.45	-388.74	-5.88	-386.30	-30.53	-110.21	-1294.00	-110.23	-1293.98	-4.66
		122	37.55	-4.76	-385.11	-6.61	-383.25	26.50	-139.56	-1298.91	-139.58	-1298.88	-5.46
		114	39.06	-2.09	-387.48	-2.16	-387.42	5.16	-153.98	-1389.57	-154.04	-1389.51	-8.52
		60	39.11	-0.08	-384.28	-0.21	-384.15	-7.09	-125.36	-1387.32	-125.44	-1387.24	9.91
33	2	54	137.90	-18.61	-1466.50	-37.23	-1447.88	-163.14	-662.83	-4657.44	-674.42	-4645.85	-214.86
		111	142.16	-40.00	-1410.17	-53.77	-1396.40	136.68	1382.08	-4117.23	1380.16	-4115.31	102.53
		122	149.01	-31.61	-1413.65	-31.75	-1413.51	13.88	1311.58	-4569.72	1307.07	-4565.20	-162.95
		76	143.03	-10.48	-1439.79	-10.57	-1439.70	-11.03	-723.95	-5106.17	-737.42	-5092.70	242.59
33	26	54	35.05	-3.80	-361.45	-8.61	-356.64	-41.21	-98.46	-1195.93	-98.49	-1195.91	-5.54
		111	34.49	-4.22	-353.83	-8.68	-349.37	39.22	-126.29	-1199.72	-126.48	-1199.53	-14.15
		122	36.99	-0.35	-357.32	-1.30	-356.38	18.33	-150.63	-1351.12	-150.83	-1350.92	-15.76
		76	37.07	1.69	-353.97	0.87	-353.15	-16.99	-124.26	-1351.39	-124.31	-1351.34	8.18
33	80	54	34.96	-2.75	-359.99	-8.14	-354.61	-43.53	-96.94	-1194.15	-96.94	-1194.15	-1.83
		111	34.49	-4.66	-353.38	-8.60	-349.43	36.88	-125.15	-1199.53	-125.25	-1199.44	-10.17
		122	37.00	-0.55	-357.10	-1.22	-356.44	15.41	-149.11	-1350.88	-149.23	-1350.75	-12.22
		76	36.97	2.40	-352.25	1.28	-351.13	-19.88	-122.28	-1349.60	-122.38	-1349.50	11.44
33	85	54	34.94	-2.86	-359.81	-8.19	-354.48	-43.30	-96.95	-1193.60	-96.95	-1193.59	-2.24
		111	34.46	-4.62	-353.09	-8.62	-349.09	37.11	-125.12	-1198.82	-125.23	-1198.71	-10.61

Elem.	Cmb	Nodo	Von Mises	N max	N min	N 1	N 2	N 1-2	M max	M min	M 1	M 2	M 1-2
		122	36.97	-0.52	-356.79	-1.22	-356.09	15.70	-149.12	-1350.17	-149.25	-1350.04	-12.62
		76	36.96	2.34	-352.09	1.26	-351.00	-19.60	-122.34	-1349.05	-122.44	-1348.95	11.07
33	87	54	96.59	-12.79	-1025.64	-25.91	-1012.52	-114.54	-455.19	-3263.74	-462.54	-3256.38	-143.54
		111	99.31	-27.29	-987.19	-37.00	-977.48	96.07	904.59	-2904.55	903.41	-2903.37	66.94
		122	104.21	-21.20	-989.95	-21.33	-989.82	11.35	854.46	-3226.46	851.48	-3223.47	-110.32
		76	100.27	-6.78	-1006.70	-6.88	-1006.60	-9.97	-499.28	-3583.65	-507.94	-3574.99	163.20
33	97	54	91.71	-11.90	-972.31	-24.44	-959.78	-109.01	-422.74	-3100.23	-429.02	-3093.95	-129.50
		111	94.03	-25.19	-936.79	-34.48	-927.50	91.54	796.75	-2778.04	795.78	-2777.08	58.81
		122	98.78	-19.20	-939.73	-19.36	-939.56	12.37	748.42	-3088.54	745.76	-3085.88	-101.00
		76	95.29	-5.88	-954.12	-6.02	-953.98	-11.65	-465.84	-3409.46	-473.35	-3401.96	148.41
33	102	54	34.94	-2.86	-359.81	-8.19	-354.48	-43.30	-96.95	-1193.60	-96.95	-1193.59	-2.24
		111	34.46	-4.62	-353.09	-8.62	-349.09	37.11	-125.12	-1198.82	-125.23	-1198.71	-10.61
		122	36.97	-0.52	-356.79	-1.22	-356.09	15.70	-149.12	-1350.17	-149.25	-1350.04	-12.62
		76	36.96	2.34	-352.09	1.26	-351.00	-19.60	-122.34	-1349.05	-122.44	-1348.95	11.07
34	2	70	124.31	-4.72	-1346.90	-50.37	-1301.25	-243.29	-405.41	-4035.60	-425.87	-4015.14	-271.79
		119	124.66	-22.64	-1237.76	-52.96	-1207.44	189.53	1191.27	-3655.20	1191.20	-3655.13	18.45
		111	139.37	-25.58	-1277.67	-29.71	-1273.54	71.79	1357.23	-4365.73	1349.12	-4357.62	-215.35
		54	131.90	9.62	-1262.31	1.97	-1254.67	-98.29	-774.09	-4970.67	-778.78	-4965.98	140.26
34	50	70	30.85	-0.76	-317.66	-10.69	-307.74	-55.20	-79.91	-1061.21	-79.91	-1061.21	-0.76
		119	30.18	-2.68	-307.51	-10.72	-299.47	48.85	-107.15	-1066.20	-107.46	-1065.89	-17.31
		111	33.68	1.85	-311.82	-0.56	-309.41	27.41	-140.32	-1278.46	-140.59	-1278.19	-17.53
		54	33.64	5.51	-306.21	2.39	-303.08	-31.05	-116.11	-1278.83	-116.21	-1278.73	10.74
34	82	70	30.79	-0.45	-317.01	-10.64	-306.82	-55.88	-79.40	-1059.46	-79.40	-1059.46	-0.12
		119	30.12	-2.87	-306.61	-10.71	-298.77	48.18	-106.71	-1064.62	-107.00	-1064.33	-16.62
		111	33.62	1.76	-311.00	-0.54	-308.71	26.67	-139.82	-1276.87	-140.07	-1276.62	-16.88
		54	33.58	5.73	-305.45	2.45	-302.16	-31.79	-115.54	-1277.08	-115.65	-1276.97	11.34
34	85	70	30.75	-0.25	-316.61	-10.61	-306.25	-56.29	-79.09	-1058.38	-79.09	-1058.38	0.28
		119	30.09	-2.98	-306.06	-10.71	-298.34	47.77	-106.43	-1063.64	-106.71	-1063.36	-16.19
		111	33.59	1.70	-310.49	-0.52	-308.27	26.23	-139.51	-1275.89	-139.75	-1275.65	-16.48
		54	33.54	5.87	-304.97	2.49	-301.59	-32.24	-115.19	-1276.00	-115.30	-1275.88	11.70
34	87	70	86.96	-3.18	-940.15	-35.00	-908.33	-169.70	-281.52	-2830.81	-294.46	-2817.87	-181.15
		119	87.07	-15.49	-865.98	-36.74	-844.74	132.72	779.93	-2578.57	779.90	-2578.54	10.14
		111	97.32	-16.85	-893.15	-19.88	-890.13	51.36	886.14	-3080.53	880.78	-3075.16	-145.76
		54	92.40	7.17	-882.18	1.65	-876.66	-69.83	-531.50	-3483.84	-534.56	-3480.77	95.06
34	97	70	82.47	-2.90	-889.46	-32.95	-859.41	-160.43	-264.32	-2691.79	-275.32	-2680.79	-163.02
		119	82.43	-14.35	-821.26	-34.53	-801.09	125.99	687.15	-2466.22	687.13	-2466.21	6.93
		111	92.12	-14.96	-846.30	-17.96	-843.30	49.82	778.20	-2947.01	773.42	-2942.22	-133.42
		54	87.75	7.23	-835.67	1.82	-830.27	-67.25	-493.64	-3309.87	-496.34	-3307.17	87.17
34	102	70	30.75	-0.25	-316.61	-10.61	-306.25	-56.29	-79.09	-1058.38	-79.09	-1058.38	0.28
		119	30.09	-2.98	-306.06	-10.71	-298.34	47.77	-106.43	-1063.64	-106.71	-1063.36	-16.19
		111	33.59	1.70	-310.49	-0.52	-308.27	26.23	-139.51	-1275.89	-139.75	-1275.65	-16.48
		54	33.54	5.87	-304.97	2.49	-301.59	-32.24	-115.19	-1276.00	-115.30	-1275.88	11.70
35	2	58	101.48	23.13	-1117.37	-57.93	-1036.31	-293.06	-1.00	-3085.77	-25.70	-3061.07	-274.91
		113	99.91	8.66	-995.69	-44.84	-942.19	225.54	830.23	-3045.91	829.30	-3044.98	-59.98
		119	120.82	-0.17	-1057.78	-17.53	-1040.42	134.39	1184.86	-3975.36	1173.20	-3963.70	-244.95
		70	114.10	48.32	-1002.87	13.66	-968.21	-187.70	-648.67	-4587.55	-648.70	-4587.52	10.67
35	50	58	25.48	5.78	-261.47	-12.79	-242.90	-67.95	-56.88	-891.24	-56.88	-891.24	1.79
		113	24.57	2.81	-247.37	-12.40	-232.16	59.78	-85.13	-896.36	-85.82	-895.67	-23.61
		119	29.01	5.85	-250.81	0.05	-245.01	38.15	-126.32	-1169.48	-126.75	-1169.05	-21.18
		70	28.97	11.17	-244.94	3.48	-237.26	-43.69	-104.71	-1171.19	-104.81	-1171.09	10.36
35	82	58	25.42	6.29	-261.07	-12.76	-242.02	-68.78	-56.35	-889.29	-56.36	-889.28	2.46
		113	24.50	2.48	-246.25	-12.37	-231.39	58.95	-84.69	-894.60	-85.34	-893.95	-22.90
		119	28.95	5.64	-249.80	0.08	-244.23	37.30	-125.85	-1167.73	-126.25	-1167.33	-20.47
		70	28.91	11.53	-244.39	3.52	-236.38	-44.55	-104.16	-1169.25	-104.27	-1169.14	11.02
35	85	58	25.39	6.61	-260.83	-12.74	-241.48	-69.28	-56.02	-888.07	-56.03	-888.06	2.87
		113	24.46	2.29	-245.55	-12.36	-230.90	58.44	-84.42	-893.51	-85.04	-892.88	-22.45
		119	28.91	5.52	-249.18	0.09	-243.75	36.78	-125.55	-1166.64	-125.94	-1166.26	-20.03
		70	28.87	11.75	-244.04	3.55	-235.84	-45.06	-103.82	-1168.04	-103.94	-1167.92	11.43
35	87	58	71.03	16.30	-779.69	-40.32	-723.07	-204.61	-9.05	-2174.68	-24.61	-2159.12	-182.89
		113	69.83	6.07	-696.53	-31.54	-658.92	158.15	542.22	-2149.72	541.53	-2149.04	-42.98
		119	84.34	0.61	-738.40	-11.68	-726.11	94.50	773.06	-2805.68	765.34	-2797.97	-165.97
		70	79.91	33.78	-701.12	9.58	-676.92	-131.14	-446.30	-3214.09	-446.33	-3214.07	8.64
35	97	58	67.39	15.58	-737.42	-38.03	-683.81	-193.63	-16.14	-2077.76	-29.30	-2064.60	-164.23
		113	66.16	5.77	-660.47	-30.08	-624.61	150.34	476.22	-2057.02	475.53	-2056.33	-41.74
		119	79.81	1.30	-698.65	-10.50	-686.85	90.08	678.28	-2684.67	671.39	-2677.77	-152.09
		70	75.87	32.01	-664.40	9.10	-641.50	-124.20	-415.36	-3052.39	-415.39	-3052.36	9.34
35	102	58	25.39	6.61	-260.83	-12.74	-241.48	-69.28	-56.02	-888.07	-56.03	-888.06	2.87
		113	24.46	2.29	-245.55	-12.36	-230.90	58.44	-84.42	-893.51	-85.04	-892.88	-22.45
		119	28.91	5.52	-249.18	0.09	-243.75	36.78	-125.55	-1166.64	-125.94	-1166.26	-20.03
		70	28.87	11.75	-244.04	3.55	-235.84	-45.06	-103.82	-1168.04	-103.94	-1167.92	11.43
36	2	82	75.66	75.88	-816.35	-55.01	-685.47	-315.68	234.43	-2271.37	219.46	-2256.41	-193.06
		125	70.96	56.51	-710.97	-35.86	-618.60	249.72	566.32	-2263.55	562.52	-2259.75	-103.60
		113	95.14	47.82	-764.46	1.63	-718.26	188.12	814.20	-3474.35	803.66	-3463.81	-212.36
		58	89.12	108.78	-714.54	20.80	-626.56	-254.35	-302.61	-3754.26	-303.79	-3753.08	-63.72
36	40	82	19.13	23.76	-198.31	-13.46	-161.09	-82.94	-27.05	-684.16	-27.12	-684.08	6.89

Elem.	Cmb	Nodo	Von Mises	N max	N min	N 1	N 2	N 1-2	M max	M min	M 1	M 2	M 1-2
		125	17.79	15.44	-175.91	-12.15	-148.32	67.22	-60.62	-691.59	-61.93	-690.28	-28.69
		113	23.06	13.18	-175.54	1.25	-163.61	45.92	-108.41	-1025.12	-108.94	-1024.60	-21.94
		58	23.14	24.57	-174.57	4.71	-154.71	-59.67	-88.32	-1027.05	-88.44	-1026.93	10.68
36	72	82	19.05	23.08	-197.02	-13.50	-160.44	-81.94	-26.97	-682.91	-27.03	-682.85	6.29
		125	17.75	16.22	-175.98	-12.21	-147.55	68.23	-60.40	-690.00	-61.76	-688.63	-29.32
		113	23.01	13.69	-175.31	1.22	-162.84	46.91	-108.20	-1023.50	-108.76	-1022.94	-22.62
		58	23.07	24.02	-173.40	4.68	-154.06	-58.69	-88.22	-1025.79	-88.33	-1025.69	10.03
36	85	82	19.01	22.67	-196.23	-13.53	-160.03	-81.33	-26.92	-682.12	-26.98	-682.07	5.91
		125	17.73	16.69	-176.02	-12.25	-147.08	68.85	-60.25	-689.01	-61.66	-687.60	-29.72
		113	22.97	14.01	-175.17	1.20	-162.37	47.51	-108.07	-1022.49	-108.65	-1021.91	-23.05
		58	23.03	23.69	-172.68	4.67	-153.65	-58.09	-88.16	-1025.00	-88.26	-1024.91	9.62
36	87	82	52.96	53.59	-570.38	-38.47	-478.32	-221.29	152.08	-1604.58	142.71	-1595.21	-127.92
		125	49.64	39.85	-497.40	-25.54	-432.01	175.66	369.50	-1600.89	366.79	-1598.18	-73.03
		113	66.44	33.74	-532.98	1.24	-500.49	131.75	528.32	-2452.50	521.29	-2445.46	-144.65
		58	62.48	75.67	-499.38	14.49	-438.19	-177.31	-213.59	-2639.41	-214.29	-2638.71	-41.20
36	97	82	50.26	51.32	-540.18	-36.48	-452.38	-210.30	133.10	-1536.75	125.23	-1528.88	-114.34
		125	47.08	38.11	-471.70	-24.67	-408.92	167.52	324.05	-1535.10	321.42	-1532.47	-69.78
		113	62.90	32.27	-503.64	1.28	-472.65	125.08	460.42	-2347.10	454.07	-2340.76	-133.31
		58	59.38	71.34	-473.06	13.68	-415.39	-167.53	-203.88	-2515.53	-204.44	-2514.97	-35.77
36	102	82	19.01	22.67	-196.23	-13.53	-160.03	-81.33	-26.92	-682.12	-26.98	-682.07	5.91
		125	17.73	16.69	-176.02	-12.25	-147.08	68.85	-60.25	-689.01	-61.66	-687.60	-29.72
		113	22.97	14.01	-175.17	1.20	-162.37	47.51	-108.07	-1022.49	-108.65	-1021.91	-23.05
		58	23.03	23.69	-172.68	4.67	-153.65	-58.09	-88.16	-1025.00	-88.26	-1024.91	9.62
37	2	78	48.70	179.97	-517.85	-38.67	-299.21	-323.68	391.42	-1386.36	385.07	-1380.01	-106.09
		123	40.65	158.37	-422.87	-19.38	-245.12	267.81	400.91	-1412.28	387.01	-1398.38	-158.15
		125	65.54	132.19	-440.11	20.76	-328.68	226.62	520.74	-2830.36	514.12	-2823.74	-148.85
		82	64.07	208.97	-441.64	27.92	-260.59	-291.57	-56.39	-2948.07	-61.66	-2942.80	-123.36
37	24	78	12.47	61.74	-136.27	-10.67	-63.86	-95.36	10.62	-442.89	10.19	-442.47	13.86
		123	10.17	45.82	-101.67	-7.34	-48.50	70.81	-33.81	-450.74	-36.71	-447.84	-34.68
		125	15.88	33.20	-93.38	4.48	-64.66	53.01	-87.63	-843.98	-88.26	-843.35	-21.84
		82	16.59	58.33	-108.73	6.64	-57.05	-77.22	-66.96	-850.47	-67.06	-850.37	8.89
37	56	78	12.21	58.33	-131.83	-10.73	-62.77	-91.45	9.73	-440.34	9.42	-440.03	11.84
		123	10.30	49.54	-105.43	-7.56	-48.33	74.76	-33.86	-450.75	-37.12	-447.48	-36.74
		125	15.93	36.26	-96.42	4.32	-64.48	56.72	-87.96	-843.76	-88.72	-843.00	-23.89
		82	16.40	55.25	-104.58	6.61	-55.95	-73.54	-67.80	-847.98	-67.87	-847.92	6.88
37	85	78	12.06	56.26	-129.13	-10.77	-62.11	-89.07	9.19	-438.78	8.95	-438.54	10.55
		123	10.39	51.81	-107.73	-7.69	-48.23	77.15	-33.87	-450.76	-37.37	-447.26	-38.07
		125	15.96	38.15	-98.30	4.23	-64.37	58.97	-88.16	-843.63	-89.00	-842.78	-25.20
		82	16.28	53.38	-102.07	6.58	-55.28	-71.30	-68.32	-846.47	-68.36	-846.43	5.60
37	87	78	34.06	127.42	-362.39	-27.21	-207.76	-227.66	261.78	-982.35	257.90	-978.48	-69.32
		123	28.46	112.39	-296.18	-13.95	-169.84	188.83	262.75	-1001.62	253.02	-991.89	-110.51
		125	45.79	93.14	-306.44	14.40	-227.71	158.94	335.40	-1999.38	330.88	-1994.86	-102.59
		82	44.88	146.42	-308.02	19.49	-181.10	-203.89	-46.95	-2078.00	-50.22	-2074.72	-81.49
37	97	78	32.30	122.32	-343.76	-25.97	-195.47	-217.08	236.93	-943.64	233.78	-940.48	-60.96
		123	27.01	108.15	-281.20	-13.60	-159.44	180.50	231.56	-963.17	222.32	-953.93	-104.67
		125	43.36	88.98	-289.18	13.54	-213.74	151.12	289.53	-1914.87	285.36	-1910.71	-95.74
		82	42.61	139.08	-291.17	18.44	-170.54	-193.26	-51.35	-1985.69	-54.08	-1982.96	-72.61
37	102	78	12.06	56.26	-129.13	-10.77	-62.11	-89.07	9.19	-438.78	8.95	-438.54	10.55
		123	10.39	51.81	-107.73	-7.69	-48.23	77.15	-33.87	-450.76	-37.37	-447.26	-38.07
		125	15.96	38.15	-98.30	4.23	-64.37	58.97	-88.16	-843.63	-89.00	-842.78	-25.20
		82	16.28	53.38	-102.07	6.58	-55.28	-71.30	-68.32	-846.47	-68.36	-846.43	5.60
38	2	50	29.06	339.08	-227.76	-0.16	111.48	-277.87	531.20	-390.50	530.93	-390.22	-15.86
		109	31.23	342.12	-164.08	25.41	152.63	244.98	328.22	-508.62	266.62	-447.02	-218.52
		123	44.58	336.09	-197.11	47.54	91.44	265.69	328.30	-2057.42	325.00	-2054.12	-88.63
		78	44.33	416.56	-235.34	42.87	138.35	-322.43	99.29	-2109.58	83.09	-2093.38	-188.45
38	27	50	9.63	114.39	-66.67	-0.52	48.25	-87.18	56.91	-153.45	54.51	-151.04	22.37
		109	8.67	105.62	-37.99	5.80	61.83	66.11	2.60	-173.94	-8.10	-163.23	-42.13
		123	12.80	99.15	-38.72	12.10	48.33	66.51	-65.31	-628.21	-66.25	-627.26	-23.07
		78	14.19	127.55	-61.27	10.95	55.33	-91.77	-46.03	-633.72	-46.05	-633.70	3.35
38	59	50	9.27	110.89	-62.00	-0.59	49.48	-82.74	55.64	-151.09	53.68	-149.13	20.03
		109	9.02	109.52	-42.34	5.57	61.61	70.57	3.31	-175.54	-8.56	-163.67	-44.52
		123	13.01	102.87	-42.86	11.89	48.12	70.57	-65.70	-628.85	-66.83	-627.72	-25.21
		78	14.00	124.42	-56.82	11.03	56.57	-87.72	-45.20	-631.75	-45.20	-631.75	1.23
38	85	50	9.05	108.78	-59.18	-0.63	50.23	-80.04	54.88	-149.67	53.18	-147.97	18.54
		109	9.24	111.91	-45.00	5.43	61.48	73.28	3.80	-176.58	-8.84	-163.94	-46.04
		123	13.14	105.13	-45.38	11.76	47.99	73.04	-65.92	-629.26	-67.18	-628.01	-26.57
		78	13.88	122.54	-54.14	11.08	57.32	-85.26	-44.69	-630.57	-44.69	-630.57	-0.12
38	87	50	20.57	240.49	-159.66	-0.19	81.02	-195.92	361.14	-279.98	361.04	-279.88	-8.10
		109	22.04	242.94	-115.32	17.67	109.95	173.09	219.32	-362.62	176.57	-319.87	-151.82
		123	31.45	237.95	-137.33	33.26	67.36	186.87	210.07	-1455.51	207.71	-1453.15	-62.63
		78	31.40	293.97	-164.03	30.06	99.88	-226.32	59.69	-1489.92	49.44	-1479.66	-125.65
38	97	50	19.74	231.28	-151.73	-0.25	79.80	-187.27	332.59	-272.03	332.55	-271.99	-4.73
		109	21.09	233.92	-109.89	16.65	107.38	165.81	197.66	-350.58	157.44	-310.35	-142.94
		123	30.08	228.44	-129.70	31.54	67.20	178.18	179.75	-1396.06	177.47	-1393.78	-59.94
		78	30.16	281.28	-154.96	28.56	97.75	-215.36	47.52	-1426.61	38.79	-1417.87	-113.16

Elem.	Cmb	Nodo	Von Mises	N max	N min	N 1	N 2	N 1-2	M max	M min	M 1	M 2	M 1-2
38	102	50	9.05	108.78	-59.18	-0.63	50.23	-80.04	54.88	-149.67	53.18	-147.97	18.54
		109	9.24	111.91	-45.00	5.43	61.48	73.28	3.80	-176.58	-8.84	-163.94	-46.04
		123	13.14	105.13	-45.38	11.76	47.99	73.04	-65.92	-629.26	-67.18	-628.01	-26.57
		78	13.88	122.54	-54.14	11.08	57.32	-85.26	-44.69	-630.57	-44.69	-630.57	-0.12
39	2	68	35.74	507.46	83.96	84.50	506.92	-15.05	1031.00	737.42	738.34	1030.08	-16.44
		118	36.72	530.51	104.09	104.77	529.83	17.11	959.98	219.56	258.54	921.00	-165.35
		109	51.01	684.67	-89.57	97.30	497.81	331.30	219.36	-1138.72	217.07	-1136.43	-55.68
		50	50.05	737.97	-127.13	75.10	535.75	-366.13	212.32	-1174.52	168.19	-1130.38	-243.44
39	27	68	11.32	162.86	21.65	22.43	162.08	-10.43	291.17	124.84	124.85	291.15	-1.74
		118	11.66	170.45	27.85	27.91	170.39	-2.92	272.00	53.56	53.79	271.78	-6.98
		109	15.41	208.28	-17.58	27.24	163.46	90.08	-33.61	-364.50	-36.96	-361.15	-33.12
		50	16.66	230.24	-38.51	20.85	170.88	-111.49	-16.64	-364.41	-16.90	-364.16	9.40
39	59	68	11.41	164.01	22.54	22.76	163.80	-5.52	293.62	123.77	123.92	293.47	-5.07
		118	11.65	170.30	27.85	27.88	170.27	1.89	271.90	52.69	53.17	271.42	-10.20
		109	15.66	211.56	-21.25	27.00	163.31	94.37	-33.47	-365.39	-37.39	-361.47	-35.87
		50	16.44	227.95	-34.42	20.97	172.56	-107.07	-16.07	-361.97	-16.19	-361.85	6.53
39	85	68	11.47	164.88	22.91	22.96	164.84	-2.53	295.17	123.05	123.34	294.88	-7.14
		118	11.64	170.36	27.69	27.85	170.20	4.81	271.88	52.10	52.78	271.20	-12.21
		109	15.82	213.58	-23.51	26.86	163.21	96.98	-33.35	-365.97	-37.65	-361.66	-37.60
		50	16.31	226.59	-31.96	21.05	173.57	-104.38	-15.70	-360.51	-15.76	-360.44	4.73
39	87	68	25.34	360.28	59.04	59.39	359.93	-10.37	726.69	508.02	508.68	726.04	-11.91
		118	26.02	376.39	73.08	73.56	375.91	12.05	675.39	154.17	179.40	650.16	-111.86
		109	36.11	484.89	-62.81	68.45	353.64	233.80	141.57	-807.72	139.69	-805.84	-42.13
		50	35.54	522.15	-88.97	52.87	380.31	-258.00	137.84	-829.47	110.02	-801.65	-161.66
39	97	68	24.36	346.84	56.29	56.61	346.51	-9.67	694.50	474.18	474.79	693.88	-11.60
		118	25.01	362.07	69.58	70.04	361.61	11.51	644.28	146.52	168.55	622.25	-102.37
		109	34.66	465.61	-59.71	65.29	340.62	223.69	122.37	-776.82	120.31	-774.76	-42.95
		50	34.21	500.92	-84.40	50.47	366.05	-246.48	120.70	-794.26	97.14	-770.69	-144.94
39	102	68	11.47	164.88	22.91	22.96	164.84	-2.53	295.17	123.05	123.34	294.88	-7.14
		118	11.64	170.36	27.69	27.85	170.20	4.81	271.88	52.10	52.78	271.20	-12.21
		109	15.82	213.58	-23.51	26.86	163.21	96.98	-33.35	-365.97	-37.65	-361.66	-37.60
		50	16.31	226.59	-31.96	21.05	173.57	-104.38	-15.70	-360.51	-15.76	-360.44	4.73
40	2	65	152.55	1914.30	-941.81	215.68	756.81	1402.19	1728.55	-165.89	663.19	899.48	939.82
		117	152.80	1873.18	-954.60	179.35	739.23	-1385.90	1433.10	-723.53	-26.73	736.31	-1008.57
		118	75.21	1113.38	-199.96	158.94	754.48	585.27	944.17	1.86	323.50	622.53	446.80
		68	82.82	1094.36	-230.98	120.22	743.17	-584.91	1288.37	-324.12	330.61	633.64	-791.88
40	23	65	46.20	590.75	-296.26	55.59	238.90	433.93	440.20	-77.36	95.20	267.65	243.99
		117	46.86	594.36	-315.25	46.46	232.65	-445.18	395.92	-120.71	34.22	240.99	-236.72
		118	22.24	341.00	-58.65	43.78	238.56	174.48	241.28	3.59	55.48	189.39	98.19
		68	23.59	345.37	-77.52	34.95	232.90	-186.85	262.75	-21.70	57.14	183.91	-127.32
40	55	65	46.54	596.38	-300.15	55.93	240.30	438.68	437.72	-75.03	94.17	268.52	241.10
		117	46.53	589.65	-310.74	46.33	232.58	-440.46	397.91	-123.89	33.29	240.73	-239.39
		118	22.48	344.73	-62.47	43.74	238.52	178.80	238.94	5.17	54.90	189.21	95.67
		68	23.39	342.62	-73.13	35.20	234.29	-182.50	265.61	-24.40	56.49	184.72	-130.06
40	85	65	46.75	599.81	-302.51	56.15	241.15	441.57	436.18	-73.59	93.53	269.06	239.30
		117	46.34	586.79	-308.01	46.24	232.54	-437.60	399.14	-125.87	32.70	240.58	-241.05
		118	22.63	347.01	-64.80	43.72	238.49	181.41	237.49	6.14	54.53	189.09	94.10
		68	23.26	340.97	-70.48	35.36	235.13	-179.85	267.39	-26.09	56.09	185.22	-131.77
40	87	65	107.93	1356.17	-668.20	151.27	536.69	993.67	1209.70	-119.58	454.60	635.53	658.45
		117	108.05	1327.02	-677.47	125.73	523.83	-982.28	1008.59	-499.10	-13.46	522.95	-704.52
		118	53.15	788.51	-141.94	111.79	534.78	414.37	660.47	2.71	222.94	440.23	310.42
		68	58.30	775.03	-163.38	84.86	526.79	-413.92	893.90	-218.89	227.88	447.12	-545.49
40	97	65	103.53	1302.63	-642.75	143.85	516.03	954.73	1147.75	-117.33	421.64	608.78	625.58
		117	103.58	1274.62	-651.86	119.50	503.27	-943.94	962.47	-466.34	-7.49	503.62	-667.13
		118	50.94	757.15	-136.59	106.61	513.95	397.76	626.48	3.60	207.99	422.08	292.47
		68	55.65	744.18	-156.64	81.25	506.30	-397.12	840.66	-200.05	212.78	427.83	-509.12
40	102	65	46.75	599.81	-302.51	56.15	241.15	441.57	436.18	-73.59	93.53	269.06	239.30
		117	46.34	586.79	-308.01	46.24	232.54	-437.60	399.14	-125.87	32.70	240.58	-241.05
		118	22.63	347.01	-64.80	43.72	238.49	181.41	237.49	6.14	54.53	189.09	94.10
		68	23.26	340.97	-70.48	35.36	235.13	-179.85	267.39	-26.09	56.09	185.22	-131.77
41	2	107	79.14	1179.77	-162.21	151.38	866.19	567.88	1137.05	132.59	299.07	970.57	373.50
		149	82.68	1138.41	-189.87	105.60	842.94	-552.42	1338.65	-67.41	312.06	959.18	-624.15
		148	166.49	2156.84	-1064.21	224.56	868.07	1578.06	1537.92	-217.41	471.02	849.49	857.02
		106	165.39	2089.44	-1093.19	162.25	834.00	-1555.46	1320.32	-609.51	1.56	709.26	-897.69
41	32	107	23.03	353.16	-70.87	43.77	238.51	188.34	233.96	8.62	53.70	188.87	90.15
		149	22.94	336.65	-63.49	35.74	237.42	-172.80	272.32	-30.56	55.12	186.64	-136.42
		148	47.30	608.98	-308.58	56.84	243.56	449.18	432.47	-69.76	92.03	270.69	234.69
		106	45.82	579.09	-300.66	45.99	232.44	-429.88	402.70	-131.05	31.26	240.38	-245.54
41	64	107	22.78	349.32	-67.04	43.80	238.48	184.02	236.13	7.03	54.25	188.92	92.67
		149	23.14	339.27	-67.85	35.47	235.95	-177.17	269.35	-27.93	55.73	185.69	-133.68
		148	46.96	603.27	-304.72	56.47	242.07	444.41	434.82	-72.12	93.01	269.68	237.58
		106	46.14	583.73	-305.20	46.11	232.42	-434.59	400.60	-127.94	32.16	240.50	-242.87
41	85	107	22.63	347.00	-64.73	43.81	238.46	181.41	237.50	6.03	54.59	188.94	94.25
		149	23.26	340.88	-70.51	35.31	235.06	-179.82	267.50	-26.28	56.11	185.12	-131.97
		148	46.75	599.80	-302.38	56.25	241.17	441.51	436.29	-73.60	93.62	269.07	239.38

Elem.	Cmb	Nodo	Von Mises	N max	N min	N 1	N 2	N 1-2	M max	M min	M 1	M 2	M 1-2
		106	46.33	586.55	-307.96	46.18	232.41	-437.46	399.29	-126.00	32.72	240.57	-241.21
41	87	107	55.77	832.72	-116.71	106.76	609.25	402.77	789.61	89.29	206.66	672.24	261.57
		149	58.21	804.31	-135.90	75.11	593.30	-392.25	928.10	-48.44	215.52	664.14	-433.70
		148	117.22	1517.87	-749.79	157.21	610.87	1110.91	1083.16	-154.46	326.50	602.20	603.26
		106	116.44	1471.17	-769.85	114.32	586.99	-1095.30	933.44	-423.12	5.40	504.91	-630.62
41	97	107	53.28	796.87	-113.83	102.09	580.95	387.32	743.16	81.10	193.38	630.87	248.46
		149	55.57	770.45	-131.81	72.48	566.16	-377.61	872.25	-47.49	201.65	623.11	-408.75
		148	111.90	1448.14	-716.16	149.20	582.78	1060.21	1034.53	-149.09	306.57	578.87	575.94
		106	111.13	1404.33	-734.99	109.24	560.10	-1045.64	894.80	-398.21	9.28	487.31	-600.70
41	102	107	22.63	347.00	-64.73	43.81	238.46	181.41	237.50	6.03	54.59	188.94	94.25
		149	23.26	340.88	-70.51	35.31	235.06	-179.82	267.50	-26.28	56.11	185.12	-131.97
		148	46.75	599.80	-302.38	56.25	241.17	441.51	436.29	-73.60	93.62	269.07	239.38
		106	46.33	586.55	-307.96	46.18	232.41	-437.46	399.29	-126.00	32.72	240.57	-241.21
42	2	108	52.15	815.03	-30.10	90.44	694.48	295.54	99.38	-726.54	88.07	-715.22	-96.01
		150	51.92	844.38	-59.08	66.52	718.78	-312.57	138.49	-734.04	123.06	-718.61	-115.01
		149	47.59	700.04	85.98	92.50	693.51	62.94	1206.62	583.49	588.66	1201.46	-56.50
		107	48.59	711.57	102.10	105.59	708.09	-45.97	1108.79	213.34	218.84	1103.28	-70.00
42	30	108	15.41	208.24	-17.58	27.26	163.40	90.09	-33.31	-364.54	-36.65	-361.20	-33.11
		150	16.66	230.17	-38.53	20.83	170.81	-111.48	-16.67	-364.51	-16.92	-364.26	9.31
		149	11.31	162.81	21.68	22.46	162.03	-10.44	291.08	124.85	124.87	291.06	-1.79
		107	11.65	170.35	27.85	27.91	170.29	-2.87	271.98	53.81	54.04	271.75	-7.02
42	62	108	15.66	211.53	-21.26	27.02	163.25	94.38	-33.17	-365.43	-37.08	-361.51	-35.87
		150	16.44	227.87	-34.43	20.96	172.48	-107.06	-16.10	-362.07	-16.22	-361.95	6.45
		149	11.41	163.96	22.57	22.79	163.75	-5.52	293.53	123.78	123.93	293.38	-5.11
		107	11.64	170.20	27.84	27.87	170.17	1.93	271.88	52.94	53.42	271.40	-10.25
42	85	108	15.82	213.54	-23.52	26.87	163.15	96.99	-33.05	-366.01	-37.35	-361.71	-37.60
		150	16.30	226.52	-31.98	21.03	173.50	-104.37	-15.72	-360.61	-15.79	-360.55	4.65
		149	11.47	164.83	22.95	22.99	164.79	-2.54	295.08	123.06	123.36	294.78	-7.18
		107	11.63	170.26	27.68	27.84	170.10	4.85	271.86	52.35	53.03	271.18	-12.25
42	87	108	36.87	571.57	-22.95	63.88	484.74	209.96	61.85	-533.16	53.73	-525.04	-69.02
		150	36.77	592.87	-43.40	47.15	502.32	-222.29	89.32	-536.53	79.93	-527.15	-76.05
		149	33.25	488.40	60.64	64.73	484.32	41.62	843.71	405.45	408.88	840.28	-38.62
		107	33.93	496.87	71.98	74.11	494.74	-30.00	775.43	149.22	152.97	771.68	-48.30
42	97	108	35.34	543.41	-23.64	61.17	458.59	202.24	50.92	-529.92	43.03	-522.03	-67.24
		150	35.31	564.37	-43.19	45.33	475.85	-214.35	77.85	-531.36	70.16	-523.67	-68.00
		149	31.48	461.88	57.97	61.41	458.44	37.12	799.84	382.19	385.28	796.75	-35.75
		107	32.12	470.28	68.80	70.54	468.54	-26.33	735.03	141.15	144.61	731.57	-45.20
42	102	108	15.82	213.54	-23.52	26.87	163.15	96.99	-33.05	-366.01	-37.35	-361.71	-37.60
		150	16.30	226.52	-31.98	21.03	173.50	-104.37	-15.72	-360.61	-15.79	-360.55	4.65
		149	11.47	164.83	22.95	22.99	164.79	-2.54	295.08	123.06	123.36	294.78	-7.18
		107	11.63	170.26	27.68	27.84	170.10	4.85	271.86	52.35	53.03	271.18	-12.25
43	2	112	45.88	485.16	-77.54	41.10	366.51	229.53	70.87	-1512.79	68.00	-1509.92	-67.39
		154	46.52	528.75	-106.33	36.18	386.24	-264.95	75.21	-1542.05	67.84	-1534.68	-108.88
		150	30.06	469.09	-93.34	7.47	368.28	-215.72	380.86	-107.88	380.11	-107.13	19.17
		108	31.73	490.09	-59.22	27.89	402.98	200.66	215.84	-245.39	130.35	-159.89	-179.23
43	30	112	12.81	99.12	-38.78	12.09	48.25	66.54	-64.81	-628.25	-65.76	-627.29	-23.17
		154	14.19	127.48	-61.30	10.94	55.24	-91.75	-46.09	-633.85	-46.11	-633.83	3.38
		150	9.62	114.35	-66.69	-0.52	48.18	-87.18	56.87	-153.53	54.50	-151.15	22.24
		108	8.66	105.57	-38.05	5.79	61.73	66.14	2.97	-173.84	-7.68	-163.20	-42.06
43	62	112	13.01	102.84	-42.91	11.88	48.04	70.60	-65.20	-628.89	-66.34	-627.76	-25.30
		154	14.00	124.36	-56.85	11.02	56.49	-87.71	-45.26	-631.88	-45.26	-631.87	1.26
		150	9.26	110.84	-62.02	-0.58	49.41	-82.74	55.60	-151.17	53.67	-149.24	19.90
		108	9.02	109.47	-42.40	5.56	61.51	70.59	3.67	-175.45	-8.14	-163.64	-44.45
43	85	112	13.14	105.10	-45.43	11.75	47.91	73.06	-65.43	-629.31	-66.69	-628.04	-26.66
		154	13.88	122.47	-54.17	11.06	57.24	-85.25	-44.74	-630.69	-44.74	-630.69	-0.10
		150	9.05	108.73	-59.20	-0.63	50.16	-80.04	54.84	-149.75	53.17	-148.08	18.40
		108	9.24	111.86	-45.06	5.42	61.38	73.30	4.15	-176.48	-8.42	-163.91	-45.97
43	87	112	32.33	336.79	-57.09	28.97	250.73	162.76	38.52	-1092.43	36.44	-1090.35	-48.48
		154	32.85	368.27	-77.55	25.60	265.12	-188.00	43.84	-1111.79	39.26	-1107.21	-72.60
		150	21.21	326.43	-69.33	4.90	252.21	-154.49	261.15	-91.82	260.49	-91.16	15.23
		108	22.36	340.91	-44.76	19.31	276.84	143.54	143.74	-186.42	85.78	-128.45	-125.61
43	97	112	30.89	316.89	-57.00	27.68	232.22	156.49	25.51	-1069.29	23.46	-1067.25	-47.31
		154	31.45	347.69	-76.69	24.55	246.45	-180.87	33.58	-1086.54	29.74	-1082.71	-65.45
		150	20.29	307.94	-69.77	4.32	233.85	-149.99	243.08	-102.87	242.33	-102.12	16.13
		108	21.37	321.47	-45.76	18.14	257.57	139.22	129.04	-191.45	75.68	-138.09	-119.39
43	102	112	13.14	105.10	-45.43	11.75	47.91	73.06	-65.43	-629.31	-66.69	-628.04	-26.66
		154	13.88	122.47	-54.17	11.06	57.24	-85.25	-44.74	-630.69	-44.74	-630.69	-0.10
		150	9.05	108.73	-59.20	-0.63	50.16	-80.04	54.84	-149.75	53.17	-148.08	18.40
		108	9.24	111.86	-45.06	5.42	61.38	73.30	4.15	-176.48	-8.42	-163.91	-45.97
44	2	116	38.75	218.77	-174.29	19.10	25.38	196.51	57.14	-2184.85	55.31	-2183.02	-63.97
		158	39.40	268.31	-200.35	23.97	43.99	-234.12	36.99	-2206.32	34.27	-2203.59	-78.13
		154	29.61	264.56	-264.74	-28.50	28.32	-263.12	256.06	-963.85	256.05	-963.83	-4.79
		112	30.92	259.83	-206.80	-18.52	71.54	228.93	156.78	-988.76	136.13	-968.12	-152.39
44	33	116	15.89	33.19	-93.47	4.47	-64.75	53.04	-87.02	-844.03	-87.66	-843.39	-21.99
		158	16.59	58.28	-108.79	6.64	-57.14	-77.21	-67.04	-850.62	-67.14	-850.52	8.99

Elem.	Cmb	Nodo	Von Mises	N max	N min	N 1	N 2	N 1-2	M max	M min	M 1	M 2	M 1-2
		154	12.47	61.70	-136.32	-10.68	-63.95	-95.36	10.58	-443.02	10.17	-442.61	13.70
		112	10.18	45.80	-101.76	-7.36	-48.61	70.84	-33.30	-450.69	-36.18	-447.81	-34.56
44	65	116	15.94	36.25	-96.51	4.31	-64.58	56.75	-87.35	-843.80	-88.12	-843.04	-24.04
		158	16.40	55.19	-104.64	6.60	-56.04	-73.52	-67.89	-848.13	-67.96	-848.07	6.98
		154	12.22	58.29	-131.88	-10.74	-62.85	-91.44	9.69	-440.47	9.39	-440.16	11.68
		112	10.31	49.51	-105.53	-7.57	-48.44	74.78	-33.35	-450.69	-36.59	-447.46	-36.63
44	85	116	15.97	38.14	-98.39	4.22	-64.47	59.00	-87.55	-843.67	-88.40	-842.82	-25.35
		158	16.29	53.33	-102.12	6.58	-55.37	-71.29	-68.41	-846.62	-68.45	-846.58	5.69
		154	12.06	56.22	-129.18	-10.77	-62.19	-89.06	9.16	-438.91	8.91	-438.67	10.39
		112	10.39	51.78	-107.82	-7.71	-48.34	77.17	-33.36	-450.71	-36.84	-447.23	-37.95
44	87	116	27.22	149.70	-128.08	13.30	8.32	138.87	26.42	-1569.05	25.09	-1567.73	-46.03
		158	27.98	185.00	-146.20	16.86	21.94	-165.58	15.37	-1583.59	13.72	-1581.94	-51.33
		154	20.89	183.00	-192.86	-20.44	10.59	-187.29	171.89	-701.05	171.89	-701.04	-1.81
		112	21.75	179.12	-151.24	-13.38	41.25	162.91	99.97	-719.17	85.84	-705.04	-106.65
44	97	116	25.92	138.84	-127.63	12.54	-1.33	133.06	11.63	-1527.59	10.32	-1526.28	-44.93
		158	27.36	172.92	-144.68	16.07	12.17	-158.79	4.88	-1540.84	3.55	-1539.50	-45.45
		154	19.98	171.62	-190.49	-19.87	1.00	-180.75	156.55	-690.80	156.55	-690.80	-0.31
		112	20.75	167.40	-149.97	-13.09	30.52	157.18	85.05	-708.90	71.92	-695.78	-101.22
44	102	116	15.97	38.14	-98.39	4.22	-64.47	59.00	-87.55	-843.67	-88.40	-842.82	-25.35
		158	16.29	53.33	-102.12	6.58	-55.37	-71.29	-68.41	-846.62	-68.45	-846.58	5.69
		154	12.06	56.22	-129.18	-10.77	-62.19	-89.06	9.16	-438.91	8.91	-438.67	10.39
		112	10.39	51.78	-107.82	-7.71	-48.34	77.17	-33.36	-450.71	-36.84	-447.23	-37.95
45	2	120	58.50	90.86	-368.82	13.05	-291.01	172.37	42.22	-2784.32	41.00	-2783.10	-58.80
		162	59.27	128.04	-377.87	20.61	-270.44	-206.90	15.45	-2788.29	14.07	-2786.91	-62.18
		158	45.82	119.92	-442.72	-38.96	-283.84	-253.27	170.63	-1701.36	170.51	-1701.24	-14.95
		116	40.72	99.61	-380.32	-34.70	-246.01	215.46	144.13	-1691.08	135.57	-1682.52	-124.99
45	49	120	23.07	13.18	-175.63	1.25	-163.70	45.94	-107.78	-1025.17	-108.32	-1024.63	-22.11
		162	23.14	24.54	-174.65	4.70	-154.81	-59.65	-88.45	-1027.22	-88.57	-1027.10	10.81
		158	19.14	23.73	-198.37	-13.47	-161.18	-82.93	-27.09	-684.31	-27.16	-684.24	6.74
		116	17.80	15.44	-176.03	-12.16	-148.43	67.25	-60.07	-691.58	-61.36	-690.29	-28.58
45	81	120	23.01	13.69	-175.41	1.22	-162.94	46.93	-107.57	-1023.55	-108.14	-1022.98	-22.80
		162	23.08	23.99	-173.48	4.68	-154.16	-58.66	-88.35	-1025.96	-88.46	-1025.85	10.16
		158	19.06	23.05	-197.09	-13.51	-160.53	-81.92	-27.02	-683.06	-27.08	-683.00	6.13
		116	17.76	16.21	-176.10	-12.22	-147.67	68.26	-59.84	-689.99	-61.20	-688.63	-29.21
45	85	120	22.98	14.01	-175.26	1.20	-162.46	47.53	-107.44	-1022.54	-108.03	-1021.95	-23.22
		162	23.04	23.66	-172.76	4.66	-153.76	-58.06	-88.30	-1025.18	-88.40	-1025.07	9.75
		158	19.02	22.64	-196.30	-13.54	-160.12	-81.31	-26.97	-682.27	-27.02	-682.22	5.75
		116	17.74	16.69	-176.13	-12.26	-147.19	68.87	-59.70	-689.00	-61.09	-687.60	-29.61
45	87	120	42.05	61.84	-268.65	8.86	-215.67	121.25	13.82	-1992.55	12.93	-1991.66	-42.29
		162	42.56	87.88	-274.31	14.36	-200.80	-145.68	-1.60	-1995.43	-2.41	-1994.62	-40.15
		158	33.06	82.42	-320.78	-27.78	-210.58	-179.69	110.13	-1225.18	110.07	-1225.12	-9.20
		116	29.49	68.03	-276.43	-24.77	-183.63	152.82	88.09	-1219.22	82.24	-1213.36	-87.27
45	97	120	40.97	57.05	-265.24	8.14	-216.33	115.63	-2.40	-1933.22	-3.28	-1932.34	-41.26
		162	41.43	81.76	-269.96	13.57	-201.76	-139.05	-13.06	-1935.96	-13.69	-1935.33	-34.82
		158	32.34	76.80	-315.10	-26.86	-211.44	-172.85	96.02	-1195.88	95.98	-1195.83	-7.58
		116	28.96	62.98	-272.36	-23.97	-185.40	146.97	70.88	-1191.57	65.45	-1186.14	-82.64
45	102	120	22.98	14.01	-175.26	1.20	-162.46	47.53	-107.44	-1022.54	-108.03	-1021.95	-23.22
		162	23.04	23.66	-172.76	4.66	-153.76	-58.06	-88.30	-1025.18	-88.40	-1025.07	9.75
		158	19.02	22.64	-196.30	-13.54	-160.12	-81.31	-26.97	-682.27	-27.02	-682.22	5.75
		116	17.74	16.69	-176.13	-12.26	-147.19	68.87	-59.70	-689.00	-61.09	-687.60	-29.61
46	2	124	79.94	49.34	-611.92	13.22	-575.79	150.27	45.61	-3309.82	44.67	-3308.89	-55.96
		166	79.52	72.92	-603.82	20.08	-550.99	-181.56	-5.08	-3308.29	-6.22	-3307.15	-61.24
		162	66.57	48.77	-649.66	-37.56	-563.33	-229.88	120.72	-2346.13	120.46	-2345.87	-25.21
		120	63.34	32.00	-601.35	-34.95	-534.40	194.73	126.54	-2335.55	122.17	-2331.18	-103.64
46	51	124	29.02	5.83	-250.89	0.04	-245.10	38.12	-125.72	-1169.52	-126.16	-1169.08	-21.43
		166	28.98	11.19	-245.06	3.50	-237.38	-43.72	-104.89	-1171.39	-104.99	-1171.28	10.43
		162	25.49	5.76	-261.58	-12.81	-243.01	-67.97	-56.96	-891.43	-56.96	-891.42	1.63
		120	24.58	2.78	-247.47	-12.41	-232.27	59.77	-84.60	-896.38	-85.28	-895.70	-23.57
46	83	124	28.96	5.64	-249.88	0.08	-244.32	37.29	-125.25	-1167.77	-125.66	-1167.36	-20.67
		166	28.92	11.53	-244.49	3.53	-236.49	-44.54	-104.35	-1169.44	-104.46	-1169.32	11.14
		162	25.43	6.27	-261.16	-12.77	-242.12	-68.77	-56.42	-889.46	-56.43	-889.45	2.32
		120	24.51	2.47	-246.35	-12.38	-231.50	58.96	-84.16	-894.63	-84.80	-893.98	-22.84
46	85	124	28.92	5.52	-249.26	0.10	-243.84	36.79	-124.96	-1166.68	-125.36	-1166.29	-20.20
		166	28.88	11.74	-244.13	3.55	-235.94	-45.04	-104.01	-1168.23	-104.13	-1168.10	11.59
		162	25.40	6.59	-260.90	-12.74	-241.57	-69.26	-56.09	-888.24	-56.10	-888.23	2.74
		120	24.47	2.29	-245.66	-12.36	-231.01	58.47	-83.88	-893.53	-84.50	-892.91	-22.38
46	87	124	57.13	33.38	-440.93	8.83	-416.37	105.09	13.74	-2362.10	13.07	-2361.43	-40.00
		166	56.85	49.84	-434.76	13.86	-398.78	-127.04	-17.37	-2361.17	-18.03	-2360.51	-39.28
		162	47.76	33.14	-467.64	-26.74	-407.76	-162.49	72.98	-1682.50	72.83	-1682.34	-16.44
		120	45.48	21.41	-433.43	-24.95	-387.07	137.61	73.15	-1676.15	70.18	-1673.17	-72.08
46	97	124	55.36	30.57	-430.72	7.95	-408.10	99.61	-4.84	-2285.55	-5.50	-2284.89	-38.77
		166	55.10	46.16	-424.40	12.96	-391.20	-120.50	-29.40	-2284.71	-29.90	-2284.20	-33.77
		162	46.45	30.51	-456.37	-25.81	-400.05	-155.72	58.57	-1635.67	58.45	-1635.54	-14.48
		120	44.27	19.38	-423.51	-24.15	-379.97	131.85	54.20	-1630.80	51.46	-1628.05	-67.96
46	102	124	28.92	5.52	-249.26	0.10	-243.84	36.79	-124.96	-1166.68	-125.36	-1166.29	-20.20

Elem.	Cmb	Nodo	Von Mises	N max	N min	N 1	N 2	N 1-2	M max	M min	M 1	M 2	M 1-2
		166	28.88	11.74	-244.13	3.55	-235.94	-45.04	-104.01	-1168.23	-104.13	-1168.10	11.59
		162	25.40	6.59	-260.90	-12.74	-241.57	-69.26	-56.09	-888.24	-56.10	-888.23	2.74
		120	24.47	2.29	-245.66	-12.36	-231.01	58.47	-83.88	-893.53	-84.50	-892.91	-22.38
47	2	110	99.26	33.01	-847.36	14.13	-828.48	127.53	85.51	-3759.47	84.61	-3758.57	-58.58
		152	97.74	48.63	-826.97	19.36	-797.70	-157.40	-32.81	-3762.01	-34.03	-3760.79	-67.60
		166	86.28	18.46	-861.27	-32.11	-810.69	-204.78	89.83	-2920.07	89.20	-2919.44	-43.62
		124	84.24	8.56	-826.55	-28.91	-789.07	172.90	118.72	-2913.86	116.27	-2911.41	-86.05
47	51	110	33.69	1.83	-311.87	-0.56	-309.48	27.29	-139.79	-1278.48	-140.07	-1278.20	-17.84
		152	33.65	5.52	-306.35	2.38	-303.20	-31.17	-116.35	-1278.98	-116.45	-1278.88	10.73
		166	30.86	-0.74	-317.81	-10.71	-307.85	-55.32	-80.01	-1061.37	-80.01	-1061.37	-0.98
		124	30.19	-2.73	-307.57	-10.73	-299.56	48.75	-106.66	-1066.24	-106.97	-1065.92	-17.41
47	83	110	33.63	1.75	-311.06	-0.53	-308.78	26.63	-139.31	-1276.89	-139.57	-1276.63	-17.08
		152	33.58	5.74	-305.56	2.45	-302.27	-31.82	-115.79	-1277.26	-115.91	-1277.15	11.43
		166	30.80	-0.44	-317.12	-10.64	-306.92	-55.91	-79.52	-1059.64	-79.52	-1059.64	-0.26
		124	30.13	-2.88	-306.70	-10.72	-298.86	48.15	-106.23	-1064.66	-106.52	-1064.37	-16.64
47	85	110	33.60	1.70	-310.56	-0.51	-308.34	26.23	-139.01	-1275.90	-139.25	-1275.66	-16.62
		152	33.54	5.87	-305.07	2.49	-301.70	-32.21	-115.45	-1276.19	-115.57	-1276.07	11.86
		166	30.76	-0.26	-316.69	-10.61	-306.35	-56.27	-79.21	-1058.56	-79.21	-1058.56	0.18
		124	30.10	-2.98	-306.16	-10.70	-298.43	47.78	-105.95	-1063.68	-106.23	-1063.40	-16.16
47	87	110	70.64	22.08	-606.16	9.35	-593.43	88.52	38.47	-2676.43	37.84	-2675.80	-41.27
		152	69.62	32.96	-591.75	13.24	-572.03	-109.23	-37.38	-2678.05	-38.10	-2677.33	-43.48
		166	61.61	12.13	-616.26	-22.82	-581.31	-144.02	49.30	-2087.83	48.91	-2087.43	-29.06
		124	60.17	5.21	-591.75	-20.70	-565.84	121.64	65.00	-2084.38	63.35	-2082.73	-59.52
47	97	110	68.16	19.97	-587.91	8.35	-576.28	83.26	15.50	-2583.40	14.90	-2582.80	-39.41
		152	67.23	30.25	-574.10	12.26	-556.11	-102.71	-48.98	-2584.66	-49.53	-2584.11	-37.50
		166	59.65	10.75	-597.85	-21.99	-565.10	-137.32	34.07	-2023.77	33.73	-2023.44	-26.16
		124	58.26	4.18	-574.38	-20.10	-550.10	116.01	43.89	-2021.48	42.38	-2019.97	-55.80
47	102	110	33.60	1.70	-310.56	-0.51	-308.34	26.23	-139.01	-1275.90	-139.25	-1275.66	-16.62
		152	33.54	5.87	-305.07	2.49	-301.70	-32.21	-115.45	-1276.19	-115.57	-1276.07	11.86
		166	30.76	-0.26	-316.69	-10.61	-306.35	-56.27	-79.21	-1058.56	-79.21	-1058.56	0.18
		124	30.10	-2.98	-306.16	-10.70	-298.43	47.78	-105.95	-1063.68	-106.23	-1063.40	-16.16
48	2	115	116.34	22.69	-1060.23	12.86	-1050.40	102.74	186.79	-4125.10	185.57	-4123.88	-72.53
		157	113.33	34.00	-1026.47	16.82	-1009.29	-133.88	-85.16	-4153.41	-86.53	-4152.05	-74.48
		152	103.97	4.86	-1057.81	-26.79	-1026.15	-180.65	67.20	-3423.73	65.51	-3422.04	-76.84
		110	102.88	0.93	-1031.45	-21.43	-1009.09	150.28	139.40	-3421.78	138.12	-3420.51	-67.44
48	31	115	37.00	-0.35	-357.37	-1.29	-356.42	18.32	-150.24	-1351.13	-150.45	-1350.92	-15.85
		157	37.08	1.68	-354.06	0.87	-353.25	-16.96	-124.60	-1351.58	-124.66	-1351.52	8.36
		152	35.06	-3.80	-361.53	-8.60	-356.73	-41.19	-98.66	-1196.13	-98.69	-1196.10	-5.60
		110	34.50	-4.21	-353.90	-8.67	-349.44	39.23	-125.89	-1199.75	-126.08	-1199.57	-14.15
48	67	115	36.99	-0.46	-357.03	-1.24	-356.25	16.69	-149.32	-1350.54	-149.48	-1350.37	-13.92
		157	37.00	2.09	-352.89	1.11	-351.91	-18.59	-123.42	-1350.13	-123.50	-1350.04	10.13
		152	34.99	-3.22	-360.51	-8.34	-355.39	-42.50	-97.73	-1194.68	-97.75	-1194.67	-3.57
		110	34.48	-4.46	-353.44	-8.63	-349.27	37.92	-125.18	-1199.20	-125.31	-1199.06	-11.97
48	85	115	36.98	-0.52	-356.84	-1.21	-356.14	15.70	-148.74	-1350.17	-148.87	-1350.04	-12.71
		157	36.96	2.34	-352.18	1.26	-351.09	-19.57	-122.67	-1349.23	-122.78	-1349.13	11.25
		152	34.95	-2.86	-359.89	-8.19	-354.57	-43.28	-97.15	-1193.79	-97.15	-1193.79	-2.30
		110	34.47	-4.61	-353.16	-8.61	-349.16	37.12	-124.72	-1198.86	-124.83	-1198.75	-10.61
48	87	115	82.47	14.94	-754.28	8.41	-747.75	70.58	104.69	-2930.08	103.86	-2929.26	-50.05
		157	80.46	22.74	-731.04	11.38	-719.67	-91.86	-73.25	-2948.72	-74.06	-2947.92	-48.16
		152	73.96	2.74	-753.07	-18.95	-731.38	-126.20	31.79	-2441.61	30.72	-2440.53	-51.53
		110	73.17	-0.07	-734.65	-15.43	-719.28	105.13	76.29	-2441.02	75.44	-2440.17	-46.38
48	97	115	79.27	13.27	-727.58	7.40	-721.71	65.68	73.76	-2821.84	73.01	-2821.08	-46.76
		157	77.46	20.58	-705.93	10.41	-695.76	-85.35	-82.25	-2838.26	-82.88	-2837.63	-41.78
		152	71.34	1.97	-726.91	-18.18	-706.76	-119.50	15.82	-2360.65	14.90	-2359.74	-46.71
		110	70.56	-0.75	-709.45	-15.07	-695.14	99.70	51.50	-2360.97	50.73	-2360.19	-43.20
48	102	115	36.98	-0.52	-356.84	-1.21	-356.14	15.70	-148.74	-1350.17	-148.87	-1350.04	-12.71
		157	36.96	2.34	-352.18	1.26	-351.09	-19.57	-122.67	-1349.23	-122.78	-1349.13	11.25
		152	34.95	-2.86	-359.89	-8.19	-354.57	-43.28	-97.15	-1193.79	-97.15	-1193.79	-2.30
		110	34.47	-4.61	-353.16	-8.61	-349.16	37.12	-124.72	-1198.86	-124.83	-1198.75	-10.61
49	2	121	131.10	11.03	-1246.12	6.65	-1241.74	74.05	382.87	-4390.89	380.62	-4388.64	-103.66
		163	125.91	21.67	-1193.25	11.82	-1183.40	-108.95	-192.12	-4492.39	-193.40	-4491.11	-74.19
		157	119.19	-3.39	-1231.33	-24.05	-1210.68	-157.93	36.26	-3857.14	31.88	-3852.76	-130.52
		115	119.13	-1.40	-1205.88	-14.78	-1192.51	126.20	212.71	-3857.87	212.22	-3857.38	-44.36
49	31	121	39.07	-2.15	-387.75	-2.27	-387.63	6.75	-155.50	-1390.31	-155.59	-1390.22	-10.56
		163	39.25	-0.57	-386.83	-0.65	-386.76	-5.48	-128.03	-1390.38	-128.08	-1390.33	8.28
		157	38.04	-4.06	-391.18	-6.33	-388.91	-29.54	-112.45	-1297.09	-112.49	-1297.04	-7.11
		115	37.57	-4.68	-385.48	-6.67	-383.49	27.46	-140.75	-1299.63	-140.81	-1299.57	-8.08
49	63	121	39.07	-2.12	-387.60	-2.20	-387.51	5.76	-154.41	-1389.84	-154.48	-1389.77	-9.32
		163	39.16	-0.26	-385.29	-0.37	-385.18	-6.46	-126.64	-1388.59	-126.71	-1388.52	9.41
		157	37.95	-3.68	-389.71	-6.05	-387.34	-30.14	-111.26	-1295.30	-111.28	-1295.27	-5.60
		115	37.56	-4.73	-385.28	-6.63	-383.37	26.86	-139.83	-1299.20	-139.86	-1299.16	-6.46
49	85	121	39.06	-2.09	-387.51	-2.16	-387.44	5.16	-153.73	-1389.55	-153.79	-1389.49	-8.56
		163	39.11	-0.08	-384.36	-0.21	-384.23	-7.06	-125.77	-1387.48	-125.86	-1387.40	10.10
		157	37.89	-3.45	-388.81	-5.88	-386.38	-30.50	-110.51	-1294.20	-110.53	-1294.18	-4.68
		115	37.56	-4.75	-385.16	-6.61	-383.30	26.50	-139.24	-1298.93	-139.27	-1298.90	-5.47

Elem.	Cmb	Nodo	Von Mises	N max	N min	N 1	N 2	N 1-2	M max	M min	M 1	M 2	M 1-2
49	87	121	92.58	6.98	-882.31	4.15	-879.49	50.06	234.71	-3112.50	233.24	-3111.03	-70.25
		163	89.14	14.19	-846.50	7.85	-840.17	-73.57	-144.95	-3179.83	-145.71	-3179.06	-48.11
		157	84.50	-2.84	-872.61	-16.82	-858.63	-109.35	9.31	-2743.86	6.52	-2741.07	-87.64
		115	84.41	-1.63	-855.22	-10.73	-846.12	87.67	123.23	-2745.10	122.91	-2744.77	-30.30
49	97	121	88.65	5.90	-847.02	3.44	-844.56	45.76	190.07	-2991.38	188.77	-2990.08	-64.37
		163	85.56	12.53	-814.23	7.04	-808.73	-67.18	-147.19	-3051.50	-147.80	-3050.89	-41.90
		157	81.22	-3.14	-838.44	-15.94	-825.64	-102.59	-6.31	-2646.35	-8.71	-2643.95	-79.52
		115	81.10	-2.17	-822.35	-10.56	-813.96	82.53	91.77	-2648.33	91.48	-2648.04	-28.03
49	102	121	39.06	-2.09	-387.51	-2.16	-387.44	5.16	-153.73	-1389.55	-153.79	-1389.49	-8.56
		163	39.11	-0.08	-384.36	-0.21	-384.23	-7.06	-125.77	-1387.48	-125.86	-1387.40	10.10
		157	37.89	-3.45	-388.81	-5.88	-386.38	-30.50	-110.51	-1294.20	-110.53	-1294.18	-4.68
		115	37.56	-4.75	-385.16	-6.61	-383.30	26.50	-139.24	-1298.93	-139.27	-1298.90	-5.47
50	2	126	143.02	-6.99	-1397.32	-8.03	-1396.27	38.13	706.01	-4529.44	701.58	-4525.01	-152.34
		168	135.48	9.31	-1323.68	4.99	-1319.36	-75.75	-390.50	-4800.52	-391.16	-4799.86	-53.91
		163	131.58	-11.49	-1378.44	-25.15	-1364.78	-135.97	-32.90	-4221.07	-43.20	-4210.78	-207.42
		121	132.87	-3.36	-1341.90	-10.88	-1334.37	100.10	371.88	-4220.17	371.84	-4220.12	-14.80
50	23	126	39.85	-3.24	-402.45	-3.28	-402.41	-4.13	-155.69	-1394.63	-155.70	-1394.62	-4.70
		168	40.13	-2.25	-403.91	-2.36	-403.80	6.67	-127.19	-1394.16	-127.24	-1394.11	8.10
		163	39.73	-3.48	-405.28	-4.23	-404.54	-17.31	-121.93	-1363.04	-121.98	-1362.99	-7.87
		121	39.35	-4.06	-401.72	-4.74	-401.03	16.50	-150.81	-1364.47	-150.81	-1364.47	-1.72
50	55	126	39.85	-3.28	-402.45	-3.34	-402.39	-4.92	-154.55	-1394.33	-154.56	-1394.31	-4.37
		168	40.04	-1.98	-402.23	-2.06	-402.15	5.88	-125.72	-1392.22	-125.78	-1392.17	8.40
		163	39.63	-3.16	-403.67	-3.95	-402.89	-17.68	-120.53	-1361.10	-120.57	-1361.06	-7.23
		121	39.35	-4.16	-401.67	-4.81	-401.01	16.13	-149.72	-1364.18	-149.72	-1364.18	-1.05
50	85	126	39.85	-3.31	-402.44	-3.38	-402.37	-5.39	-153.84	-1394.13	-153.85	-1394.12	-4.17
		168	39.98	-1.81	-401.22	-1.89	-401.15	5.40	-124.82	-1391.04	-124.88	-1390.98	8.59
		163	39.58	-2.97	-402.69	-3.78	-401.89	-17.91	-119.66	-1359.92	-119.70	-1359.88	-6.83
		121	39.35	-4.22	-401.64	-4.86	-401.00	15.91	-149.04	-1363.99	-149.04	-1363.99	-0.63
50	87	126	100.63	-5.18	-985.12	-5.81	-984.50	24.70	450.06	-3205.41	447.20	-3202.55	-102.12
		168	95.64	5.72	-935.70	3.08	-933.06	-49.78	-277.04	-3385.76	-277.43	-3385.37	-34.79
		163	92.98	-8.21	-972.50	-17.27	-963.44	-93.04	-38.19	-2995.07	-44.76	-2988.50	-139.19
		121	93.80	-2.86	-948.09	-7.90	-943.05	68.85	228.05	-2995.31	228.02	-2995.28	-9.95
50	97	126	95.99	-5.19	-941.60	-5.69	-941.11	21.50	383.80	-3075.56	381.32	-3073.08	-92.45
		168	91.53	4.67	-896.81	2.51	-894.65	-44.06	-265.90	-3237.36	-266.21	-3237.06	-30.11
		163	89.08	-7.94	-930.21	-16.06	-922.09	-86.18	-50.48	-2881.27	-56.11	-2875.63	-126.20
		121	89.79	-3.21	-908.19	-7.78	-903.62	64.15	184.77	-2882.43	184.74	-2882.41	-9.04
50	102	126	39.85	-3.31	-402.44	-3.38	-402.37	-5.39	-153.84	-1394.13	-153.85	-1394.12	-4.17
		168	39.98	-1.81	-401.22	-1.89	-401.15	5.40	-124.82	-1391.04	-124.88	-1390.98	8.59
		163	39.58	-2.97	-402.69	-3.78	-401.89	-17.91	-119.66	-1359.92	-119.70	-1359.88	-6.83
		121	39.35	-4.22	-401.64	-4.86	-401.00	15.91	-149.04	-1363.99	-149.04	-1363.99	-0.63
51	2	114	150.44	-29.52	-1485.03	-29.68	-1484.87	-15.15	1127.52	-4526.65	1121.86	-4520.99	-178.76
		156	143.63	-5.10	-1431.98	-5.20	-1431.87	-12.00	-689.00	-5135.70	-689.00	-5135.70	0.54
		168	140.76	-16.60	-1493.39	-25.36	-1484.63	-113.43	-195.45	-4528.92	-215.03	-4509.33	-290.66
		126	143.64	-11.70	-1427.47	-15.68	-1423.49	74.98	658.12	-4502.61	658.07	-4502.56	15.44
51	32	114	39.35	-4.06	-401.72	-4.75	-401.03	-16.55	-150.79	-1364.40	-150.79	-1364.40	1.56
		156	39.72	-3.48	-405.25	-4.22	-404.50	17.28	-122.11	-1363.07	-122.16	-1363.03	7.77
		168	40.14	-2.25	-403.92	-2.36	-403.81	-6.70	-127.12	-1394.13	-127.17	-1394.08	-8.20
		126	39.85	-3.23	-402.43	-3.27	-402.39	4.07	-155.77	-1394.68	-155.79	-1394.66	4.49
51	64	114	39.35	-4.16	-401.67	-4.82	-401.01	-16.19	-149.70	-1364.10	-149.70	-1364.10	0.88
		156	39.63	-3.16	-403.64	-3.94	-402.86	17.66	-120.71	-1361.14	-120.75	-1361.10	7.13
		168	40.04	-1.98	-402.25	-2.07	-402.16	-5.91	-125.65	-1392.19	-125.71	-1392.13	-8.49
		126	39.85	-3.28	-402.43	-3.34	-402.37	4.86	-154.64	-1394.37	-154.65	-1394.36	4.16
51	85	114	39.35	-4.22	-401.63	-4.87	-400.99	-15.96	-149.02	-1363.92	-149.02	-1363.92	0.46
		156	39.57	-2.97	-402.66	-3.77	-401.86	17.88	-119.84	-1359.95	-119.88	-1359.91	6.74
		168	39.98	-1.82	-401.23	-1.89	-401.16	-5.43	-124.75	-1391.01	-124.81	-1390.95	-8.68
		126	39.85	-3.30	-402.42	-3.38	-402.35	5.34	-153.93	-1394.18	-153.94	-1394.17	3.96
51	87	114	105.49	-20.29	-1043.53	-20.43	-1043.38	-12.23	731.65	-3199.46	728.04	-3195.85	-119.11
		156	101.02	-3.94	-1008.20	-3.97	-1008.16	-5.61	-475.31	-3605.12	-475.31	-3605.12	1.26
		168	99.14	-11.51	-1048.89	-17.16	-1043.24	-76.35	-147.51	-3204.16	-160.00	-3191.68	-194.93
		126	101.04	-8.32	-1005.23	-10.90	-1002.64	50.70	418.22	-3187.63	418.19	-3187.60	10.82
51	97	114	100.28	-18.88	-994.09	-19.05	-993.92	-13.19	637.82	-3066.02	634.72	-3062.92	-107.11
		156	96.33	-4.08	-962.35	-4.09	-962.34	-2.60	-443.62	-3430.58	-443.63	-3430.58	2.09
		168	94.67	-10.80	-998.71	-15.70	-993.81	-69.45	-149.82	-3073.45	-160.52	-3062.74	-176.61
		126	96.36	-8.01	-959.70	-10.27	-957.44	46.36	355.24	-3059.65	355.21	-3059.62	10.28
51	102	114	39.35	-4.22	-401.63	-4.87	-400.99	-15.96	-149.02	-1363.92	-149.02	-1363.92	0.46
		156	39.57	-2.97	-402.66	-3.77	-401.86	17.88	-119.84	-1359.95	-119.88	-1359.91	6.74
		168	39.98	-1.82	-401.23	-1.89	-401.16	-5.43	-124.75	-1391.01	-124.81	-1390.95	-8.68
		126	39.85	-3.30	-402.42	-3.38	-402.35	5.34	-153.93	-1394.18	-153.94	-1394.17	3.96
52	2	122	150.72	-42.37	-1490.82	-46.56	-1486.62	-77.87	1362.78	-4415.11	1359.05	-4411.37	-146.91
		164	144.22	-16.85	-1494.31	-20.78	-1490.38	76.06	-767.11	-5020.65	-770.63	-5017.13	122.29
		156	146.64	-17.06	-1523.33	-20.00	-1520.39	-66.43	-534.75	-4982.17	-553.91	-4963.01	-291.32
		114	149.89	-25.23	-1456.90	-26.30	-1455.83	39.22	1066.13	-4609.37	1064.76	-4608.00	88.07
52	24	122	37.56	-4.68	-385.46	-6.68	-383.46	-27.52	-140.82	-1299.53	-140.87	-1299.48	7.97
		164	38.03	-4.07	-391.13	-6.33	-388.87	29.52	-112.72	-1297.12	-112.76	-1297.08	7.02
		156	39.25	-0.57	-386.83	-0.65	-386.75	5.45	-128.07	-1390.35	-128.12	-1390.30	-8.35

Elem.	Cmb	Nodo	Von Mises	N max	N min	N 1	N 2	N 1-2	M max	M min	M 1	M 2	M 1-2
		114	39.07	-2.15	-387.71	-2.27	-387.59	-6.81	-155.65	-1390.32	-155.74	-1390.23	10.31
52	56	122	37.56	-4.73	-385.26	-6.64	-383.34	-26.92	-139.89	-1299.10	-139.93	-1299.07	6.35
		164	37.94	-3.68	-389.66	-6.05	-387.29	30.11	-111.53	-1295.33	-111.55	-1295.30	5.51
		156	39.16	-0.27	-385.29	-0.38	-385.18	6.43	-126.68	-1388.56	-126.75	-1388.49	-9.49
		114	39.06	-2.11	-387.56	-2.20	-387.47	-5.82	-154.57	-1389.85	-154.63	-1389.79	9.07
52	85	122	37.56	-4.76	-385.13	-6.62	-383.27	-26.55	-139.31	-1298.84	-139.33	-1298.81	5.37
		164	37.89	-3.45	-388.76	-5.88	-386.34	30.47	-110.79	-1294.23	-110.80	-1294.21	4.59
		156	39.11	-0.08	-384.35	-0.21	-384.23	7.03	-125.82	-1387.46	-125.90	-1387.37	-10.18
		114	39.06	-2.09	-387.47	-2.16	-387.40	-5.22	-153.89	-1389.57	-153.94	-1389.51	8.31
52	87	122	105.42	-28.89	-1045.22	-31.93	-1042.18	-55.45	889.81	-3116.45	887.45	-3114.09	-97.22
		164	101.20	-11.73	-1048.00	-14.64	-1045.10	54.77	-526.27	-3519.57	-528.53	-3517.32	82.14
		156	102.95	-11.58	-1066.61	-13.36	-1064.82	-43.35	-373.80	-3505.91	-386.06	-3493.65	-195.57
		114	105.08	-17.18	-1022.85	-17.82	-1022.21	25.45	690.22	-3258.17	689.32	-3257.27	59.82
52	97	122	99.96	-26.66	-993.39	-29.64	-990.41	-53.54	781.51	-2982.42	779.51	-2980.42	-86.74
		164	96.26	-11.07	-996.37	-13.98	-993.46	53.47	-488.33	-3344.51	-490.28	-3342.56	74.59
		156	97.98	-10.60	-1012.36	-12.05	-1010.92	-38.05	-353.58	-3344.58	-364.13	-3334.03	-177.38
		114	99.87	-15.82	-973.52	-16.34	-973.00	22.19	600.02	-3122.50	599.21	-3121.69	54.99
52	102	122	37.56	-4.76	-385.13	-6.62	-383.27	-26.55	-139.31	-1298.84	-139.33	-1298.81	5.37
		164	37.89	-3.45	-388.76	-5.88	-386.34	30.47	-110.79	-1294.23	-110.80	-1294.21	4.59
		156	39.11	-0.08	-384.35	-0.21	-384.23	7.03	-125.82	-1387.46	-125.90	-1387.37	-10.18
		114	39.06	-2.09	-387.47	-2.16	-387.40	-5.22	-153.89	-1389.57	-153.94	-1389.51	8.31
53	2	111	142.13	-40.08	-1409.87	-53.74	-1396.21	-136.06	1382.49	-4116.89	1380.92	-4115.32	-93.08
		153	137.94	-18.52	-1466.64	-37.28	-1447.88	163.73	-666.51	-4660.00	-679.09	-4647.42	223.80
		164	142.98	-10.43	-1439.22	-10.53	-1439.13	11.65	-735.54	-5108.97	-748.37	-5096.14	-236.47
		122	149.06	-31.65	-1413.85	-31.78	-1413.72	-13.28	1317.52	-4568.84	1312.58	-4563.90	170.34
53	24	111	34.49	-4.21	-353.85	-8.68	-349.39	-39.28	-126.05	-1199.65	-126.23	-1199.46	14.12
		153	35.05	-3.80	-361.47	-8.60	-356.67	41.16	-99.00	-1196.16	-99.03	-1196.13	5.52
		164	37.07	1.68	-354.04	0.87	-353.23	16.94	-124.75	-1351.55	-124.81	-1351.49	-8.40
		122	36.99	-0.35	-357.31	-1.29	-356.36	-18.38	-150.46	-1351.10	-150.67	-1350.90	15.58
53	60	111	34.48	-4.46	-353.39	-8.64	-349.21	-37.96	-125.33	-1199.09	-125.47	-1198.96	11.95
		153	34.98	-3.22	-360.45	-8.34	-355.33	42.47	-98.07	-1194.72	-98.08	-1194.71	3.49
		164	37.00	2.08	-352.86	1.11	-351.89	18.57	-123.57	-1350.10	-123.65	-1350.02	-10.17
		122	36.98	-0.46	-356.98	-1.24	-356.19	-16.74	-149.54	-1350.51	-149.70	-1350.36	13.66
53	85	111	34.47	-4.61	-353.11	-8.62	-349.10	-37.17	-124.88	-1198.75	-124.98	-1198.65	10.58
		153	34.94	-2.86	-359.83	-8.19	-354.51	43.25	-97.49	-1193.82	-97.49	-1193.82	2.22
		164	36.96	2.33	-352.16	1.25	-351.08	19.54	-122.83	-1349.21	-122.93	-1349.11	-11.29
		122	36.97	-0.52	-356.78	-1.21	-356.08	-15.75	-148.96	-1350.15	-149.09	-1350.02	12.45
53	87	111	99.29	-27.34	-986.99	-36.97	-977.36	-95.66	904.91	-2904.33	903.95	-2903.36	-60.64
		153	96.61	-12.73	-1025.73	-25.94	-1012.52	114.92	-457.74	-3265.44	-465.73	-3257.46	149.50
		164	100.23	-6.74	-1006.34	-6.85	-1006.23	10.37	-507.05	-3585.56	-515.30	-3577.31	-159.15
		122	104.24	-21.22	-990.08	-21.35	-989.96	-10.96	858.43	-3225.86	855.18	-3222.60	115.22
53	97	111	94.01	-25.24	-936.61	-34.46	-927.39	-91.18	797.09	-2777.85	796.30	-2777.06	-53.11
		153	91.73	-11.85	-972.40	-24.47	-959.78	109.35	-425.13	-3101.76	-431.94	-3094.95	134.90
		164	95.25	-5.84	-953.80	-5.99	-953.64	12.01	-472.90	-3411.23	-480.05	-3404.08	-144.76
		122	98.81	-19.22	-939.85	-19.38	-939.69	-12.01	752.03	-3087.99	749.14	-3085.09	105.41
53	102	111	34.47	-4.61	-353.11	-8.62	-349.10	-37.17	-124.88	-1198.75	-124.98	-1198.65	10.58
		153	34.94	-2.86	-359.83	-8.19	-354.51	43.25	-97.49	-1193.82	-97.49	-1193.82	2.22
		164	36.96	2.33	-352.16	1.25	-351.08	19.54	-122.83	-1349.21	-122.93	-1349.11	-11.29
		122	36.97	-0.52	-356.78	-1.21	-356.08	-15.75	-148.96	-1350.15	-149.09	-1350.02	12.45
54	2	119	124.61	-22.81	-1237.41	-52.94	-1207.29	-188.91	1190.51	-3655.40	1190.50	-3655.39	-8.93
		161	124.38	-4.54	-1347.12	-50.40	-1301.26	243.87	-405.79	-4038.05	-427.66	-4016.18	281.00
		153	131.88	9.75	-1261.91	2.02	-1254.17	98.89	-782.74	-4972.97	-786.99	-4968.73	-133.29
		111	139.40	-25.67	-1277.77	-29.73	-1273.71	-71.18	1362.21	-4365.36	1353.47	-4356.61	223.66
54	44	119	30.18	-2.67	-307.53	-10.73	-299.48	-48.90	-106.93	-1066.14	-107.24	-1065.83	17.34
		161	30.85	-0.78	-317.68	-10.69	-307.77	55.16	-80.39	-1061.42	-80.39	-1061.42	0.79
		153	33.64	5.50	-306.26	2.39	-303.15	31.00	-116.62	-1279.00	-116.72	-1278.90	-10.90
		111	33.68	1.86	-311.82	-0.56	-309.39	-27.46	-140.11	-1278.42	-140.38	-1278.16	17.39
54	76	119	30.13	-2.86	-306.64	-10.72	-298.78	-48.23	-106.49	-1064.56	-106.78	-1064.27	16.65
		161	30.79	-0.46	-317.03	-10.63	-306.85	55.83	-79.89	-1059.68	-79.89	-1059.68	0.15
		153	33.58	5.72	-305.50	2.45	-302.23	31.74	-116.05	-1277.26	-116.16	-1277.15	-11.50
		111	33.62	1.77	-311.00	-0.53	-308.69	-26.72	-139.61	-1276.84	-139.86	-1276.59	16.75
54	85	119	30.09	-2.97	-306.09	-10.71	-298.35	-47.82	-106.21	-1063.58	-106.48	-1063.31	16.23
		161	30.76	-0.27	-316.62	-10.60	-306.28	56.24	-79.57	-1058.59	-79.57	-1058.59	-0.25
		153	33.54	5.86	-305.03	2.49	-301.66	32.19	-115.69	-1276.17	-115.82	-1276.05	-11.87
		111	33.59	1.71	-310.49	-0.52	-308.26	-26.28	-139.29	-1275.85	-139.53	-1275.62	16.35
54	87	119	87.03	-15.60	-865.75	-36.72	-844.64	-132.32	779.47	-2578.70	779.47	-2578.70	-3.79
		161	87.01	-3.06	-940.30	-35.01	-908.34	170.08	-281.88	-2832.43	-295.71	-2818.60	187.30
		153	92.38	7.26	-881.91	1.68	-876.33	70.22	-537.32	-3485.40	-540.10	-3482.62	-90.44
		111	97.34	-16.92	-893.22	-19.89	-890.24	-50.96	889.48	-3080.26	883.71	-3074.49	151.29
54	97	119	82.40	-14.45	-821.06	-34.52	-800.99	-125.63	686.76	-2466.35	686.76	-2466.34	-1.16
		161	82.51	-2.79	-889.60	-32.96	-859.42	160.77	-264.73	-2693.22	-276.49	-2681.46	168.59
		153	87.73	7.31	-835.43	1.85	-829.98	67.60	-498.95	-3311.31	-501.40	-3308.86	-82.99
		111	92.14	-15.02	-846.35	-17.97	-843.40	-49.46	781.24	-2946.75	776.10	-2941.61	138.41
54	102	119	30.09	-2.97	-306.09	-10.71	-298.35	-47.82	-106.21	-1063.58	-106.48	-1063.31	16.23
		161	30.76	-0.27	-316.62	-10.60	-306.28	56.24	-79.57	-1058.59	-79.57	-1058.59	-0.25

Elem.	Cmb	Nodo	Von Mises	N max	N min	N 1	N 2	N 1-2	M max	M min	M 1	M 2	M 1-2
		153	33.54	5.86	-305.03	2.49	-301.66	32.19	-115.69	-1276.17	-115.82	-1276.05	-11.87
		111	33.59	1.71	-310.49	-0.52	-308.26	-26.28	-139.29	-1275.85	-139.53	-1275.62	16.35
55	2	113	99.84	8.40	-995.26	-44.82	-942.04	-224.91	827.71	-3046.89	826.47	-3045.65	69.46
		155	101.60	23.41	-1117.74	-57.96	-1036.37	293.66	2.37	-3087.82	-24.02	-3061.42	284.39
		161	114.11	48.59	-1002.66	13.71	-967.78	188.29	-654.46	-4589.74	-654.47	-4589.74	-2.89
		119	120.84	-0.36	-1057.78	-17.56	-1040.58	-133.76	1189.14	-3975.45	1176.60	-3962.90	254.25
55	44	113	24.57	2.83	-247.40	-12.40	-232.17	-59.83	-84.95	-896.32	-85.64	-895.62	23.70
		155	25.48	5.76	-261.47	-12.79	-242.93	67.91	-57.28	-891.43	-57.28	-891.43	-1.71
		161	28.97	11.15	-244.99	3.48	-237.32	43.65	-105.21	-1171.37	-105.31	-1171.27	-10.46
		119	29.02	5.87	-250.82	0.05	-245.00	-38.20	-126.07	-1169.44	-126.50	-1169.01	21.10
55	76	113	24.51	2.51	-246.28	-12.38	-231.39	-59.00	-84.51	-894.56	-85.16	-893.91	22.99
		155	25.43	6.27	-261.08	-12.75	-242.05	68.73	-56.75	-889.47	-56.76	-889.47	-2.38
		161	28.91	11.51	-244.43	3.52	-236.44	44.50	-104.67	-1169.43	-104.78	-1169.32	-11.13
		119	28.95	5.66	-249.81	0.08	-244.23	-37.35	-125.60	-1167.69	-126.00	-1167.29	20.39
55	85	113	24.46	2.31	-245.58	-12.36	-230.91	-58.50	-84.24	-893.47	-84.87	-892.84	22.54
		155	25.39	6.59	-260.83	-12.73	-241.51	69.24	-56.42	-888.25	-56.43	-888.24	-2.79
		161	28.87	11.73	-244.08	3.55	-235.90	45.01	-104.32	-1168.22	-104.45	-1168.10	-11.54
		119	28.91	5.54	-249.18	0.09	-243.74	-36.83	-125.31	-1166.60	-125.69	-1166.22	19.95
55	87	113	69.78	5.90	-696.25	-31.53	-658.81	-157.74	540.57	-2150.38	539.66	-2149.48	49.32
		155	71.10	16.49	-779.94	-40.34	-723.11	205.00	-6.91	-2176.02	-23.54	-2159.38	189.22
		161	79.92	33.96	-700.99	9.61	-676.64	131.53	-450.23	-3215.58	-450.24	-3215.57	-3.47
		119	84.35	0.49	-738.40	-11.69	-726.22	-94.08	775.93	-2805.73	767.64	-2797.43	172.16
55	97	113	66.11	5.62	-660.21	-30.07	-624.52	-149.96	474.75	-2057.62	473.86	-2056.72	47.50
		155	67.46	15.74	-737.64	-38.05	-683.85	193.99	-14.28	-2078.94	-28.37	-2064.85	169.98
		161	75.88	32.17	-664.28	9.14	-641.25	124.54	-418.97	-3053.75	-418.97	-3053.74	-4.66
		119	79.81	1.18	-698.64	-10.51	-686.95	-89.71	680.91	-2684.69	673.50	-2677.28	157.69
55	102	113	24.46	2.31	-245.58	-12.36	-230.91	-58.50	-84.24	-893.47	-84.87	-892.84	22.54
		155	25.39	6.59	-260.83	-12.73	-241.51	69.24	-56.42	-888.25	-56.43	-888.24	-2.79
		161	28.87	11.73	-244.08	3.55	-235.90	45.01	-104.32	-1168.22	-104.45	-1168.10	-11.54
		119	28.91	5.54	-249.18	0.09	-243.74	-36.83	-125.31	-1166.60	-125.69	-1166.22	19.95
56	2	125	70.85	56.15	-710.40	-35.84	-618.41	-249.10	561.00	-2265.59	556.49	-2261.08	112.81
		167	75.83	76.26	-816.92	-55.07	-685.59	316.31	241.95	-2272.23	225.49	-2255.77	202.73
		155	89.18	109.25	-714.55	20.86	-626.16	254.96	-305.75	-3756.40	-307.27	-3754.88	72.39
		113	95.12	47.47	-764.32	1.58	-718.43	-187.48	817.75	-3474.76	806.16	-3463.17	222.79
56	46	125	17.79	15.48	-175.95	-12.15	-148.32	-67.27	-60.51	-691.58	-61.83	-690.26	28.82
		167	19.13	23.72	-198.30	-13.46	-161.12	82.90	-27.34	-684.30	-27.41	-684.23	-6.77
		155	23.14	24.54	-174.58	4.71	-154.75	59.63	-88.80	-1027.23	-88.92	-1027.11	-10.72
		113	23.06	13.20	-175.56	1.25	-163.61	-45.97	-108.16	-1025.08	-108.68	-1024.55	21.92
56	78	125	17.75	16.25	-176.02	-12.21	-147.56	-68.28	-60.28	-689.99	-61.66	-688.61	29.46
		167	19.06	23.05	-197.02	-13.50	-160.47	81.90	-27.26	-683.05	-27.32	-683.00	-6.17
		155	23.07	23.99	-173.41	4.68	-154.11	58.64	-88.70	-1025.97	-88.81	-1025.87	-10.07
		113	23.01	13.71	-175.33	1.22	-162.84	-46.96	-107.95	-1023.46	-108.50	-1022.90	22.61
56	85	125	17.73	16.73	-176.06	-12.25	-147.08	-68.90	-60.14	-689.00	-61.56	-687.58	29.86
		167	19.01	22.64	-196.23	-13.53	-160.06	81.28	-27.21	-682.27	-27.27	-682.22	-5.78
		155	23.03	23.66	-172.69	4.67	-153.70	58.04	-88.65	-1025.19	-88.75	-1025.09	-9.66
		113	22.98	14.03	-175.19	1.20	-162.36	-47.56	-107.81	-1022.45	-108.40	-1021.87	23.03
56	87	125	49.57	39.61	-497.03	-25.52	-431.89	-175.25	365.98	-1602.25	362.79	-1599.06	79.19
		167	53.08	53.84	-570.76	-38.52	-478.40	221.71	157.00	-1605.12	146.69	-1594.81	134.39
		155	62.52	75.98	-499.39	14.53	-437.93	177.71	-215.77	-2640.84	-216.68	-2639.93	46.97
		113	66.43	33.50	-532.89	1.21	-500.60	-131.33	530.71	-2452.75	522.99	-2445.03	151.59
56	97	125	47.01	37.89	-471.35	-24.65	-408.81	-167.15	320.87	-1536.34	317.80	-1533.27	75.38
		167	50.36	51.54	-540.52	-36.52	-452.46	210.67	137.50	-1537.21	128.82	-1528.53	120.22
		155	59.42	71.62	-473.07	13.72	-415.16	167.89	-205.91	-2516.83	-206.64	-2516.10	41.01
		113	62.89	32.06	-503.56	1.25	-472.75	-124.70	462.60	-2347.31	455.64	-2340.36	139.61
56	102	125	17.73	16.73	-176.06	-12.25	-147.08	-68.90	-60.14	-689.00	-61.56	-687.58	29.86
		167	19.01	22.64	-196.23	-13.53	-160.06	81.28	-27.21	-682.27	-27.27	-682.22	-5.78
		155	23.03	23.66	-172.69	4.67	-153.70	58.04	-88.65	-1025.19	-88.75	-1025.09	-9.66
		113	22.98	14.03	-175.19	1.20	-162.36	-47.56	-107.81	-1022.45	-108.40	-1021.87	23.03
57	2	123	40.46	157.95	-422.14	-19.31	-244.88	-267.22	391.83	-1416.20	376.33	-1400.69	166.72
		165	48.95	180.43	-518.61	-38.81	-299.37	324.33	404.12	-1385.47	396.60	-1377.96	115.73
		167	64.20	209.72	-441.89	28.00	-260.17	292.21	-56.80	-2950.32	-62.94	-2944.18	133.12
		125	65.47	131.57	-439.78	20.67	-328.88	-225.97	523.28	-2830.93	515.58	-2823.23	160.56
57	26	123	10.17	45.87	-101.71	-7.34	-48.50	-70.86	-33.78	-450.77	-36.71	-447.84	34.84
		165	12.47	61.69	-136.25	-10.67	-63.89	95.32	10.46	-442.98	10.05	-442.57	-13.71
		167	16.59	58.28	-108.72	6.65	-57.08	77.18	-67.39	-850.64	-67.49	-850.54	-8.87
		125	15.88	33.24	-93.42	4.48	-64.66	-53.06	-87.38	-843.93	-88.01	-843.30	21.89
57	58	123	10.30	49.59	-105.48	-7.56	-48.33	-74.81	-33.83	-450.77	-37.12	-447.48	36.90
		165	12.21	58.28	-131.81	-10.73	-62.79	91.41	9.57	-440.43	9.27	-440.13	-11.69
		167	16.40	55.20	-104.57	6.61	-55.98	73.50	-68.24	-848.15	-68.30	-848.09	-6.86
		125	15.93	36.30	-96.46	4.32	-64.48	-56.77	-87.71	-843.71	-88.47	-842.95	23.94
57	85	123	10.39	51.86	-107.77	-7.69	-48.23	-77.20	-33.84	-450.79	-37.37	-447.26	38.23
		165	12.06	56.22	-129.11	-10.76	-62.13	89.03	9.04	-438.87	8.80	-438.63	-10.40
		167	16.28	53.33	-102.05	6.59	-55.31	71.26	-68.75	-846.64	-68.79	-846.60	-5.58
		125	15.96	38.19	-98.34	4.23	-64.37	-59.02	-87.90	-843.58	-88.75	-842.74	25.25
57	87	123	28.33	112.11	-295.69	-13.90	-169.68	-188.44	256.71	-1004.24	245.90	-993.43	116.25

Elem.	Cmb	Nodo	Von Mises	N max	N min	N 1	N 2	N 1-2	M max	M min	M 1	M 2	M 1-2
		165	34.23	127.72	-362.89	-27.31	-207.87	228.09	270.18	-981.73	265.57	-977.12	75.77
		167	44.96	146.91	-308.19	19.55	-180.82	204.31	-47.31	-2079.48	-51.13	-2075.67	88.00
		125	45.74	92.73	-306.22	14.35	-227.84	-158.52	337.11	-1999.74	331.88	-1994.52	110.41
57	97	123	26.89	107.91	-280.76	-13.56	-159.29	-180.15	226.09	-965.55	215.87	-955.33	109.88
		165	32.45	122.59	-344.22	-26.05	-195.58	217.47	244.50	-943.04	240.72	-939.27	66.82
		167	42.69	139.52	-291.32	18.49	-170.29	193.64	-51.75	-1987.03	-54.95	-1983.84	78.51
		125	43.32	88.61	-288.98	13.49	-213.86	-150.74	291.10	-1915.19	286.30	-1910.39	102.83
57	102	123	10.39	51.86	-107.77	-7.69	-48.23	-77.20	-33.84	-450.79	-37.37	-447.26	38.23
		165	12.06	56.22	-129.11	-10.76	-62.13	89.03	9.04	-438.87	8.80	-438.63	-10.40
		167	16.28	53.33	-102.05	6.59	-55.31	71.26	-68.75	-846.64	-68.79	-846.60	-5.58
		125	15.96	38.19	-98.34	4.23	-64.37	-59.02	-87.90	-843.58	-88.75	-842.74	25.25
58	2	109	31.31	341.86	-163.33	25.61	152.92	-244.44	316.12	-517.21	249.56	-450.64	225.93
		151	29.02	339.51	-228.57	-0.44	111.37	278.48	549.79	-386.96	549.13	-386.30	24.88
		165	44.24	417.55	-235.71	42.96	138.88	323.09	102.14	-2112.36	83.98	-2094.21	199.70
		123	44.73	335.31	-196.72	47.40	91.19	-265.11	329.35	-2058.14	325.01	-2053.79	101.74
58	21	109	8.67	105.67	-38.04	5.80	61.83	-66.16	2.56	-174.05	-8.23	-163.26	42.30
		151	9.62	114.35	-66.63	-0.52	48.23	87.14	56.89	-153.45	54.52	-151.07	-22.20
		165	14.19	127.50	-61.24	10.95	55.31	91.72	-46.39	-633.87	-46.41	-633.85	-3.27
		123	12.81	99.20	-38.77	12.10	48.33	-66.56	-65.08	-628.17	-66.04	-627.21	23.20
58	53	109	9.03	109.57	-42.38	5.57	61.62	-70.62	3.28	-175.66	-8.68	-163.70	44.69
		151	9.26	110.84	-61.96	-0.59	49.47	82.70	55.62	-151.09	53.70	-149.16	-19.86
		165	14.00	124.37	-56.79	11.03	56.55	87.68	-45.56	-631.90	-45.56	-631.90	-1.15
		123	13.01	102.91	-42.91	11.89	48.12	-70.62	-65.47	-628.81	-66.61	-627.67	25.33
58	85	109	9.25	111.96	-45.05	5.43	61.48	-73.33	3.76	-176.70	-8.96	-163.97	46.20
		151	9.05	108.73	-59.14	-0.63	50.22	80.00	54.86	-149.67	53.20	-148.01	-18.37
		165	13.88	122.49	-54.10	11.08	57.31	85.22	-45.05	-630.72	-45.05	-630.72	0.21
		123	13.14	105.18	-45.43	11.76	47.99	-73.09	-65.70	-629.23	-66.96	-627.96	26.70
58	87	109	22.09	242.78	-114.83	17.80	110.15	-172.74	211.24	-368.36	165.18	-322.29	156.78
		151	20.54	240.77	-160.20	-0.38	80.94	196.32	373.49	-277.57	373.18	-277.27	14.14
		165	31.34	294.62	-164.27	30.12	100.23	226.76	61.48	-1491.74	49.98	-1480.23	133.16
		123	31.55	237.44	-137.08	33.17	67.19	-186.48	210.81	-1455.99	207.74	-1452.92	71.38
58	97	109	21.14	233.78	-109.44	16.77	107.56	-165.50	190.33	-355.79	147.09	-312.55	147.46
		151	19.71	231.53	-152.22	-0.43	79.74	187.64	343.74	-269.79	343.57	-269.62	10.22
		165	30.11	281.88	-155.18	28.62	98.07	215.75	49.06	-1428.21	39.25	-1418.40	119.98
		123	30.18	227.98	-129.47	31.46	67.05	-177.83	180.45	-1396.49	177.52	-1393.56	67.89
58	102	109	9.25	111.96	-45.05	5.43	61.48	-73.33	3.76	-176.70	-8.96	-163.97	46.20
		151	9.05	108.73	-59.14	-0.63	50.22	80.00	54.86	-149.67	53.20	-148.01	-18.37
		165	13.88	122.49	-54.10	11.08	57.31	85.22	-45.05	-630.72	-45.05	-630.72	0.21
		123	13.14	105.18	-45.43	11.76	47.99	-73.09	-65.70	-629.23	-66.96	-627.96	26.70
59	2	118	36.78	530.70	104.54	105.19	530.05	-16.63	956.24	193.12	233.51	915.86	170.85
		160	35.79	507.57	83.51	84.07	507.01	15.47	1038.13	761.93	763.96	1036.11	23.55
		151	49.95	739.02	-127.36	75.22	536.43	366.71	220.08	-1179.17	171.21	-1130.30	256.90
		109	51.19	684.06	-89.38	97.13	497.55	-330.86	218.47	-1140.15	214.84	-1136.52	70.14
59	21	118	11.66	170.45	27.84	27.89	170.39	2.87	271.95	53.29	53.52	271.72	7.12
		160	11.32	162.86	21.68	22.45	162.09	10.39	291.22	125.02	125.04	291.20	1.90
		151	16.66	230.21	-38.49	20.84	170.88	111.45	-16.92	-364.52	-17.16	-364.27	-9.26
		109	15.41	208.32	-17.61	27.26	163.46	-90.13	-33.42	-364.50	-36.81	-361.11	33.30
59	53	118	11.65	170.30	27.83	27.86	170.27	-1.94	271.85	52.42	52.90	271.36	10.34
		160	11.41	164.02	22.57	22.78	163.80	5.48	293.68	123.95	124.11	293.52	5.23
		151	16.43	227.91	-34.39	20.96	172.56	107.03	-16.34	-362.08	-16.46	-361.96	-6.39
		109	15.66	211.60	-21.28	27.02	163.31	-94.42	-33.27	-365.39	-37.24	-361.43	36.06
59	85	118	11.64	170.37	27.67	27.83	170.20	-4.86	271.84	51.82	52.52	271.14	12.35
		160	11.47	164.89	22.94	22.98	164.84	2.49	295.24	123.22	123.53	294.93	7.30
		151	16.30	226.55	-31.94	21.04	173.57	104.34	-15.97	-360.62	-16.03	-360.56	-4.59
		109	15.82	213.62	-23.54	26.87	163.21	-97.03	-33.16	-365.97	-37.50	-361.62	37.79
59	87	118	26.06	376.52	73.38	73.83	376.06	-11.73	672.89	136.51	162.68	646.72	115.55
		160	25.37	360.36	58.74	59.11	359.99	10.65	731.42	524.42	525.77	730.06	16.67
		151	35.46	522.85	-89.13	52.95	380.76	258.38	142.84	-832.44	112.00	-801.61	170.66
		109	36.23	484.49	-62.69	68.33	353.46	-233.51	141.06	-808.73	138.22	-805.90	51.80
59	97	118	25.04	362.18	69.85	70.28	361.75	-11.22	642.00	130.48	153.36	619.13	105.73
		160	24.39	346.90	56.02	56.35	346.57	9.91	698.76	489.11	490.32	697.54	15.93
		151	34.14	501.55	-84.54	50.55	366.47	246.83	125.08	-796.84	98.91	-770.67	153.11
		109	34.77	465.24	-59.60	65.19	340.45	-223.43	121.98	-777.79	119.00	-774.81	51.73
59	102	118	11.64	170.37	27.67	27.83	170.20	-4.86	271.84	51.82	52.52	271.14	12.35
		160	11.47	164.89	22.94	22.98	164.84	2.49	295.24	123.22	123.53	294.93	7.30
		151	16.30	226.55	-31.94	21.04	173.57	104.34	-15.97	-360.62	-16.03	-360.56	-4.59
		109	15.82	213.62	-23.54	26.87	163.21	-97.03	-33.16	-365.97	-37.50	-361.62	37.79
60	2	117	152.89	1873.57	-954.98	179.78	738.81	1386.38	1418.09	-751.36	-61.89	728.62	1010.15
		159	152.56	1914.71	-941.89	215.29	757.54	-1402.33	1747.01	-142.04	697.59	907.38	-938.69
		160	83.24	1094.97	-231.12	120.22	743.63	585.21	1307.92	-338.02	335.02	634.89	809.20
		118	74.85	1113.23	-199.74	159.02	754.46	-585.09	926.62	14.01	318.80	621.82	-430.42
60	23	117	45.82	579.21	-300.77	45.93	232.51	429.98	402.42	-131.28	30.85	240.29	245.45
		159	47.31	609.13	-308.67	56.86	243.61	-449.30	432.48	-69.40	92.28	270.80	-234.53
		160	22.94	336.68	-63.48	35.72	237.48	172.79	272.33	-30.65	54.98	186.70	136.42
		118	23.03	353.24	-70.92	43.76	238.56	-188.39	233.77	8.96	53.69	189.04	-89.75

Elem.	Cmb	Nodo	Von Mises	N max	N min	N 1	N 2	N 1-2	M max	M min	M 1	M 2	M 1-2
60	55	117	46.14	583.85	-305.31	46.04	232.50	434.70	400.32	-128.17	31.75	240.40	242.78
		159	46.96	603.42	-304.80	56.50	242.12	-444.53	434.82	-71.77	93.26	269.79	-237.42
		160	23.14	339.30	-67.84	35.45	236.01	177.16	269.35	-28.01	55.59	185.75	133.68
		118	22.78	349.40	-67.09	43.78	238.53	-184.08	235.94	7.38	54.23	189.09	-92.27
60	85	117	46.34	586.67	-308.07	46.12	232.48	437.56	399.02	-126.23	32.31	240.48	241.12
		159	46.75	599.95	-302.46	56.27	241.22	-441.63	436.29	-73.24	93.87	269.18	-239.21
		160	23.26	340.91	-70.50	35.29	235.12	179.81	267.51	-26.36	55.97	185.18	131.97
		118	22.63	347.08	-64.78	43.80	238.51	-181.46	237.31	6.38	54.58	189.12	-93.85
60	87	117	108.11	1327.26	-677.73	126.00	523.54	982.59	998.58	-517.72	-36.95	517.81	705.58
		159	107.94	1356.46	-668.24	151.03	537.19	-993.77	1221.92	-103.54	477.58	640.81	-657.69
		160	58.58	775.43	-163.48	84.85	527.10	414.12	906.92	-228.16	230.81	447.95	557.06
		118	52.91	788.42	-141.79	111.85	534.78	-414.26	648.80	10.78	219.81	439.76	-299.46
60	97	117	103.64	1274.84	-652.10	119.74	503.00	944.22	953.39	-483.28	-28.83	498.94	668.11
		159	103.54	1302.91	-642.79	143.63	516.49	-954.82	1158.75	-102.65	442.52	613.59	-624.87
		160	55.90	744.54	-156.73	81.24	506.58	397.29	852.45	-208.46	215.42	428.58	519.64
		118	50.72	757.07	-136.46	106.67	513.94	-397.66	615.95	10.88	205.17	421.66	-282.51
60	102	117	46.34	586.67	-308.07	46.12	232.48	437.56	399.02	-126.23	32.31	240.48	241.12
		159	46.75	599.95	-302.46	56.27	241.22	-441.63	436.29	-73.24	93.87	269.18	-239.21
		160	23.26	340.91	-70.50	35.29	235.12	179.81	267.51	-26.36	55.97	185.18	131.97
		118	22.63	347.08	-64.78	43.80	238.51	-181.46	237.31	6.38	54.58	189.12	-93.85
61	2	149	80.19	1316.76	-197.59	167.62	951.55	647.82	989.49	318.39	318.60	989.28	11.89
		191	86.22	1107.29	-353.40	-53.82	807.71	-589.78	1491.45	114.51	582.56	1023.40	-652.23
		190	170.18	2344.90	-999.75	345.14	1000.01	1639.96	2012.35	551.11	1498.06	1065.40	697.86
		148	166.09	2026.15	-1151.04	90.37	784.74	-1550.19	1078.47	-1123.42	-622.28	577.32	-923.22
61	36	149	23.78	388.87	-82.10	43.90	262.87	208.49	207.08	79.60	83.66	203.01	22.39
		191	25.04	343.83	-107.72	-7.46	243.57	-187.67	338.01	12.01	140.13	209.88	-159.22
		190	49.43	668.11	-293.82	89.84	284.44	471.02	571.12	129.23	362.43	337.93	220.61
		148	46.86	573.93	-315.34	32.54	226.05	-433.98	365.44	-256.76	-99.96	208.63	-270.14
61	68	149	23.56	385.26	-79.02	44.64	261.60	205.23	207.23	77.28	82.26	202.25	24.96
		191	25.04	341.77	-112.66	-7.81	236.92	-191.45	332.37	11.60	138.98	205.00	-156.95
		190	48.79	658.18	-292.07	88.51	277.59	465.63	564.74	129.00	360.69	333.05	217.43
		148	47.16	577.67	-320.88	32.20	224.58	-438.86	361.42	-255.51	-101.91	207.83	-266.77
61	85	149	23.43	383.06	-77.14	45.08	260.83	203.25	207.38	75.78	81.38	201.78	26.58
		191	25.04	340.56	-115.71	-8.02	232.87	-193.75	328.90	11.37	138.24	202.02	-155.53
		190	48.41	652.15	-291.01	87.70	273.43	462.35	560.80	128.86	359.58	330.08	215.47
		148	47.34	579.94	-324.26	31.99	223.69	-441.82	358.94	-254.75	-103.15	207.33	-264.68
61	87	149	56.56	928.87	-141.96	117.76	669.15	458.98	686.71	222.97	223.25	686.42	11.47
		191	60.81	783.52	-250.95	-36.95	569.52	-419.02	1038.00	78.01	406.80	709.20	-455.55
		190	119.90	1650.22	-705.30	241.79	703.13	1154.95	1415.61	385.32	1046.65	754.28	493.97
		148	117.04	1428.09	-810.59	64.51	552.99	-1092.37	766.80	-782.88	-428.60	412.53	-650.77
61	97	149	54.09	888.44	-138.33	112.17	637.94	440.97	645.92	211.72	212.13	645.51	13.35
		191	58.15	751.78	-241.68	-34.37	544.47	-403.71	980.48	74.02	388.16	666.34	-431.36
		190	114.54	1574.61	-674.57	229.80	670.23	1102.82	1353.05	367.78	996.17	724.66	473.56
		148	111.83	1364.78	-773.87	62.58	528.33	-1043.66	738.71	-741.18	-401.62	399.15	-622.26
61	102	149	23.43	383.06	-77.14	45.08	260.83	203.25	207.38	75.78	81.38	201.78	26.58
		191	25.04	340.56	-115.71	-8.02	232.87	-193.75	328.90	11.37	138.24	202.02	-155.53
		190	48.41	652.15	-291.01	87.70	273.43	462.35	560.80	128.86	359.58	330.08	215.47
		148	47.34	579.94	-324.26	31.99	223.69	-441.82	358.94	-254.75	-103.15	207.33	-264.68
62	2	150	55.82	789.47	-48.85	53.32	687.30	274.24	282.81	-847.66	160.50	-725.35	-351.14
		192	53.56	845.71	-103.68	33.78	708.26	-334.07	264.38	-780.96	235.44	-752.02	-171.50
		191	46.71	663.90	-12.24	-10.73	662.39	31.89	1410.39	855.25	1000.95	1264.69	-244.25
		149	52.52	751.34	67.30	67.46	751.18	-10.36	1108.94	-22.82	-2.75	1088.87	-149.37
62	30	150	15.84	194.36	-22.95	16.23	155.18	83.54	27.16	-374.85	10.57	-358.26	-79.95
		192	17.20	234.68	-46.96	14.01	173.71	-115.99	43.41	-375.55	42.70	-374.84	-17.24
		191	11.04	146.74	-9.11	-7.06	144.69	-17.75	338.60	220.64	244.78	314.45	-47.59
		149	12.70	185.31	18.88	19.08	185.11	5.75	272.56	15.98	20.14	268.40	-32.38
62	62	150	16.09	198.03	-25.39	15.88	156.76	86.70	29.07	-373.65	11.37	-355.95	-82.55
		192	17.14	235.18	-43.77	13.93	177.47	-112.99	44.72	-371.19	43.82	-370.29	-19.31
		191	11.21	149.66	-8.55	-7.29	148.39	-14.09	344.25	220.29	245.76	318.78	-50.08
		149	12.81	187.17	17.87	18.42	186.63	9.57	275.46	16.35	21.30	270.51	-35.48
62	85	150	16.25	200.26	-26.88	15.66	157.72	88.62	30.28	-372.96	11.86	-354.54	-84.19
		192	17.10	235.52	-41.87	13.88	179.76	-111.17	45.54	-368.56	44.51	-367.53	-20.62
		191	11.32	151.53	-8.31	-7.43	150.64	-11.87	347.73	220.06	246.38	321.41	-51.65
		149	12.88	188.37	17.19	18.02	187.54	11.89	277.27	16.55	22.04	271.79	-37.42
62	87	150	39.38	552.78	-35.91	37.63	479.23	194.65	191.86	-614.11	108.58	-530.84	-245.32
		192	37.98	595.01	-74.51	24.37	496.14	-237.54	181.62	-569.08	162.90	-550.35	-117.08
		191	32.64	462.50	-8.97	-8.15	461.68	19.68	986.55	599.58	700.15	885.98	-169.72
		149	36.73	525.85	47.31	47.37	525.80	-5.32	776.26	-13.00	1.10	762.15	-104.57
62	97	150	37.67	524.72	-35.80	36.00	452.92	187.32	176.96	-603.13	100.01	-526.18	-232.61
		192	36.52	567.52	-72.63	23.82	471.07	-228.99	171.26	-561.60	154.92	-545.26	-108.21
		191	30.90	436.66	-8.89	-8.31	436.08	16.08	936.89	572.01	667.13	841.77	-160.19
		149	34.81	498.94	45.11	45.13	498.92	-3.15	736.69	-9.80	3.70	723.19	-99.50
62	102	150	16.25	200.26	-26.88	15.66	157.72	88.62	30.28	-372.96	11.86	-354.54	-84.19
		192	17.10	235.52	-41.87	13.88	179.76	-111.17	45.54	-368.56	44.51	-367.53	-20.62
		191	11.32	151.53	-8.31	-7.43	150.64	-11.87	347.73	220.06	246.38	321.41	-51.65

Elem.	Cmb	Nodo	Von Mises	N max	N min	N 1	N 2	N 1-2	M max	M min	M 1	M 2	M 1-2
		149	12.88	188.37	17.19	18.02	187.54	11.89	277.27	16.55	22.04	271.79	-37.42
63	2	154	44.85	406.63	-64.63	27.09	314.92	186.57	173.89	-1551.33	140.49	-1517.92	-237.74
		196	48.24	559.51	-97.43	40.86	421.22	-267.82	103.38	-1614.17	83.47	-1594.25	-183.88
		192	28.55	388.92	-177.39	-46.51	258.04	-238.72	592.40	-120.29	577.62	-105.51	-101.57
		150	34.73	509.98	-67.02	-0.52	443.48	184.25	273.03	-377.24	67.75	-171.96	-302.24
63	30	154	12.10	73.95	-37.21	7.96	28.78	54.60	-4.36	-625.21	-8.32	-621.24	-49.46
		196	14.85	138.27	-52.36	14.81	71.10	-91.06	2.17	-650.24	1.29	-649.36	-23.92
		192	9.14	90.59	-96.03	-16.23	10.79	-92.32	137.28	-140.40	137.06	-140.18	-7.85
		150	9.67	109.71	-35.05	-1.01	75.66	61.40	35.02	-194.41	5.69	-165.08	-76.61
63	62	154	12.29	77.41	-39.69	7.75	29.96	57.48	-3.20	-623.58	-7.49	-619.28	-51.45
		196	14.77	137.09	-48.95	14.81	73.34	-88.30	3.41	-646.99	2.40	-645.97	-25.65
		192	8.91	88.72	-92.20	-16.47	12.98	-89.26	138.31	-137.21	137.97	-136.87	-9.72
		150	9.95	113.19	-37.83	-1.44	76.80	64.59	37.36	-194.13	6.42	-163.20	-78.77
63	85	154	12.41	79.51	-41.20	7.63	30.68	59.24	-2.47	-622.61	-6.99	-618.10	-52.72
		196	14.73	136.40	-46.90	14.80	74.70	-86.62	4.17	-645.02	3.07	-643.92	-26.76
		192	8.77	87.60	-89.90	-16.61	14.31	-87.39	138.96	-135.30	138.53	-134.86	-10.91
		150	10.12	115.31	-39.52	-1.70	77.49	66.53	38.85	-194.03	6.88	-162.06	-80.15
63	87	154	31.55	280.87	-47.76	19.08	214.04	132.28	115.37	-1117.01	92.73	-1094.36	-165.52
		196	34.11	390.73	-70.74	29.21	290.77	-190.09	69.12	-1161.76	56.05	-1148.69	-126.16
		192	20.15	270.11	-129.40	-33.22	173.93	-170.80	413.09	-97.86	403.55	-88.32	-69.17
		150	24.50	354.80	-49.38	-0.57	305.98	131.71	185.85	-276.02	46.08	-136.25	-212.18
63	97	154	30.10	262.94	-47.87	18.21	196.86	127.17	104.12	-1090.22	83.31	-1069.41	-156.28
		196	32.72	369.83	-69.67	28.31	271.86	-182.92	64.36	-1133.17	52.76	-1121.58	-117.25
		192	19.31	254.31	-127.99	-32.17	158.49	-165.68	392.80	-106.03	384.47	-97.70	-63.92
		150	23.43	334.57	-49.35	-0.75	285.97	127.66	171.95	-273.70	42.86	-144.61	-202.15
63	102	154	12.41	79.51	-41.20	7.63	30.68	59.24	-2.47	-622.61	-6.99	-618.10	-52.72
		196	14.73	136.40	-46.90	14.80	74.70	-86.62	4.17	-645.02	3.07	-643.92	-26.76
		192	8.77	87.60	-89.90	-16.61	14.31	-87.39	138.96	-135.30	138.53	-134.86	-10.91
		150	10.12	115.31	-39.52	-1.70	77.49	66.53	38.85	-194.03	6.88	-162.06	-80.15
64	2	158	36.57	144.88	-163.15	13.47	-31.74	152.35	108.07	-2203.39	89.64	-2184.95	-205.60
		200	41.52	307.82	-163.36	44.06	100.40	-233.90	34.44	-2273.41	25.31	-2264.28	-144.91
		196	33.18	205.11	-343.53	-54.18	-84.25	-273.90	369.04	-970.82	361.33	-963.12	-101.33
		154	32.20	243.47	-161.25	-20.96	103.18	192.61	179.86	-1063.05	116.12	-999.31	-274.16
64	33	158	16.80	20.00	-100.56	3.21	-83.77	41.74	-27.94	-838.50	-29.82	-836.62	-39.00
		200	16.61	69.01	-91.24	14.86	-37.09	-75.80	-10.71	-863.67	-10.92	-863.46	-13.47
		196	14.52	46.93	-164.19	-17.43	-99.84	-97.19	81.70	-432.41	81.53	-432.24	-9.35
		154	9.17	40.70	-85.37	-6.97	-37.70	61.14	6.21	-460.86	-3.58	-451.08	-66.88
64	65	158	16.73	21.91	-101.55	3.07	-82.70	44.40	-28.54	-836.28	-30.62	-834.21	-40.89
		200	16.41	67.04	-87.83	14.78	-35.57	-73.23	-11.69	-860.08	-11.96	-859.81	-15.18
		196	14.31	44.76	-160.77	-17.67	-98.35	-94.52	82.78	-428.84	82.54	-428.60	-11.06
		154	9.17	43.59	-87.53	-7.29	-36.66	63.89	7.58	-459.05	-2.80	-448.68	-68.80
64	85	158	16.69	23.11	-102.18	2.98	-82.05	46.01	-28.90	-834.94	-31.11	-832.73	-42.09
		200	16.29	65.84	-85.76	14.74	-34.65	-71.67	-12.28	-857.89	-12.59	-857.58	-16.26
		196	14.18	43.44	-158.70	-17.82	-97.44	-92.90	83.44	-426.68	83.15	-426.39	-12.16
		154	9.16	45.35	-88.85	-7.48	-36.03	65.57	8.43	-457.97	-2.33	-447.21	-70.03
64	87	158	26.40	98.32	-121.04	9.38	-32.10	107.70	68.06	-1580.11	55.61	-1567.67	-142.68
		200	29.30	213.04	-119.39	31.34	62.31	-165.49	21.13	-1629.79	15.19	-1623.86	-98.77
		196	23.93	141.77	-249.41	-38.49	-69.16	-194.99	256.98	-703.93	251.97	-698.93	-69.18
		154	22.66	167.22	-118.21	-14.97	63.98	137.15	120.70	-769.43	77.10	-725.84	-192.11
64	97	158	26.04	90.47	-121.72	8.85	-40.10	103.23	57.97	-1536.13	46.59	-1524.75	-134.19
		200	28.03	199.83	-118.33	30.21	51.29	-158.73	19.00	-1583.66	13.81	-1578.46	-91.13
		196	23.42	132.85	-245.50	-37.08	-75.57	-188.19	244.54	-691.55	240.14	-687.15	-64.04
		154	21.63	155.66	-117.55	-14.51	52.62	132.42	110.23	-754.70	69.78	-714.24	-182.63
64	102	158	16.69	23.11	-102.18	2.98	-82.05	46.01	-28.90	-834.94	-31.11	-832.73	-42.09
		200	16.29	65.84	-85.76	14.74	-34.65	-71.67	-12.28	-857.89	-12.59	-857.58	-16.26
		196	14.18	43.44	-158.70	-17.82	-97.44	-92.90	83.44	-426.68	83.15	-426.39	-12.16
		154	9.16	45.35	-88.85	-7.48	-36.03	65.57	8.43	-457.97	-2.33	-447.21	-70.03
65	2	162	59.56	53.51	-386.07	9.11	-341.67	132.46	61.07	-2782.63	47.60	-2769.16	-195.28
		204	57.60	161.94	-320.29	43.13	-201.48	-207.79	-14.94	-2847.57	-19.36	-2843.15	-111.80
		200	51.36	90.12	-520.81	-51.24	-379.45	-257.64	240.56	-1693.33	234.23	-1687.01	-110.44
		158	37.87	79.06	-318.08	-24.50	-214.53	174.36	141.42	-1752.77	111.54	-1722.89	-236.03
65	47	162	23.91	8.67	-186.52	0.98	-178.83	37.97	-51.53	-1015.85	-52.83	-1014.55	-35.38
		204	23.00	32.99	-154.00	13.34	-134.36	-57.34	-22.73	-1035.34	-22.80	-1035.27	-8.25
		200	20.95	16.65	-223.09	-15.98	-190.47	-82.20	48.34	-672.15	48.04	-671.84	-14.79
		158	17.30	13.65	-160.75	-8.61	-138.49	58.19	-14.45	-696.14	-19.51	-691.08	-58.50
65	79	162	23.84	8.47	-185.40	1.01	-177.94	37.30	-51.29	-1013.77	-52.55	-1012.51	-34.77
		204	22.93	33.50	-153.55	13.36	-133.41	-57.98	-22.41	-1033.02	-22.47	-1032.96	-7.71
		200	20.89	17.27	-222.71	-15.91	-189.53	-82.84	48.64	-669.80	48.36	-669.52	-14.26
		158	17.22	13.38	-159.52	-8.55	-137.60	57.53	-14.70	-694.01	-19.67	-689.04	-57.90
65	85	162	23.79	8.35	-184.71	1.03	-177.38	36.89	-51.14	-1012.48	-52.37	-1011.25	-34.38
		204	22.89	33.82	-153.27	13.37	-132.83	-58.37	-22.21	-1031.58	-22.27	-1031.53	-7.38
		200	20.86	17.66	-222.47	-15.87	-188.94	-83.23	48.82	-668.35	48.55	-668.08	-13.92
		158	17.17	13.21	-158.76	-8.51	-137.04	57.13	-14.85	-692.69	-19.76	-687.77	-57.51
65	87	162	42.88	36.41	-281.62	6.21	-251.43	93.23	33.77	-1989.95	24.75	-1980.94	-134.77
		204	41.43	111.70	-233.20	30.54	-152.03	-146.31	-13.05	-2035.79	-15.88	-2032.97	-75.52

Elem.	Cmb	Nodo	Von Mises	N max	N min	N 1	N 2	N 1-2	M max	M min	M 1	M 2	M 1-2
		200	36.99	62.01	-376.45	-36.27	-278.16	-182.85	166.76	-1217.88	162.63	-1213.75	-75.48
		158	27.53	53.84	-232.60	-17.46	-161.29	123.86	92.16	-1260.73	71.72	-1240.29	-165.02
65	97	162	41.84	33.59	-278.40	5.73	-250.55	88.96	24.02	-1929.28	15.86	-1921.12	-126.00
		204	40.40	104.46	-230.19	29.31	-155.04	-139.66	-13.04	-1972.89	-15.47	-1970.46	-68.95
		200	36.14	57.86	-368.86	-34.82	-276.19	-175.95	158.54	-1187.17	154.90	-1183.53	-69.92
		158	27.13	49.72	-230.56	-16.89	-163.95	119.30	81.57	-1229.15	62.61	-1210.19	-156.49
65	102	162	23.79	8.35	-184.71	1.03	-177.38	36.89	-51.14	-1012.48	-52.37	-1011.25	-34.38
		204	22.89	33.82	-153.27	13.37	-132.83	-58.37	-22.21	-1031.58	-22.27	-1031.53	-7.38
		200	20.86	17.66	-222.47	-15.87	-188.94	-83.23	48.82	-668.35	48.55	-668.08	-13.92
		158	17.17	13.21	-158.76	-8.51	-137.04	57.13	-14.85	-692.69	-19.76	-687.77	-57.51
66	2	166	80.68	29.12	-637.58	8.60	-617.06	115.15	34.49	-3297.77	22.86	-3286.14	-196.50
		208	76.81	99.44	-533.73	40.34	-474.63	-184.20	-68.99	-3363.36	-71.27	-3361.09	-86.50
		204	70.76	34.52	-719.69	-45.61	-639.57	-232.40	157.76	-2326.21	151.30	-2319.75	-126.48
		162	61.08	24.39	-545.63	-21.80	-499.43	155.56	101.18	-2380.97	84.55	-2364.34	-202.48
66	43	166	29.77	3.62	-260.35	0.27	-256.99	29.58	-68.98	-1158.88	-69.73	-1158.13	-28.59
		208	28.85	19.47	-226.70	11.22	-218.45	-44.31	-29.28	-1173.45	-29.28	-1173.45	-1.60
		204	27.03	4.78	-283.00	-13.16	-265.07	-69.57	24.36	-876.13	24.05	-875.82	-16.64
		162	24.32	2.89	-234.52	-7.91	-223.72	49.47	-37.09	-897.08	-39.63	-894.54	-46.67
66	75	166	29.70	3.52	-259.34	0.29	-256.11	28.95	-68.64	-1156.93	-69.36	-1156.21	-27.98
		208	28.77	19.81	-225.83	11.30	-217.32	-44.92	-28.88	-1171.33	-28.88	-1171.33	-1.08
		204	26.95	5.21	-282.19	-13.05	-263.93	-70.11	24.66	-873.99	24.37	-873.70	-16.11
		162	24.25	2.75	-233.44	-7.85	-222.83	48.92	-36.87	-895.10	-39.35	-892.62	-46.05
66	85	166	29.66	3.46	-258.71	0.31	-255.56	28.57	-68.43	-1155.71	-69.13	-1155.01	-27.60
		208	28.72	20.01	-225.30	11.34	-216.63	-45.29	-28.63	-1170.01	-28.63	-1170.01	-0.75
		204	26.91	5.47	-281.69	-12.99	-263.23	-70.43	24.85	-872.66	24.57	-872.38	-15.77
		162	24.20	2.67	-232.78	-7.82	-222.28	48.59	-36.73	-893.87	-39.17	-891.43	-45.66
66	87	166	57.74	19.73	-459.40	5.77	-445.45	80.58	13.72	-2352.45	6.03	-2344.76	-134.68
		208	55.02	68.52	-385.42	28.41	-345.30	-128.84	-49.91	-2398.15	-51.33	-2396.73	-57.76
		204	50.74	23.54	-517.15	-32.14	-461.48	-164.33	108.36	-1667.03	104.14	-1662.82	-86.43
		162	43.94	16.45	-394.62	-15.58	-362.59	110.19	62.47	-1706.41	51.14	-1695.08	-141.08
66	97	166	56.02	18.11	-448.74	5.24	-435.87	76.43	3.55	-2275.10	-3.33	-2268.23	-124.96
		208	53.44	64.00	-377.33	27.11	-340.44	-122.14	-47.04	-2317.98	-48.24	-2316.79	-52.04
		204	49.35	21.75	-503.79	-30.70	-451.34	-157.52	102.67	-1619.34	98.95	-1615.62	-80.00
		162	42.86	15.03	-386.89	-15.09	-356.77	105.82	51.88	-1657.85	41.43	-1647.39	-133.28
66	102	166	29.66	3.46	-258.71	0.31	-255.56	28.57	-68.43	-1155.71	-69.13	-1155.01	-27.60
		208	28.72	20.01	-225.30	11.34	-216.63	-45.29	-28.63	-1170.01	-28.63	-1170.01	-0.75
		204	26.91	5.47	-281.69	-12.99	-263.23	-70.43	24.85	-872.66	24.57	-872.38	-15.77
		162	24.20	2.67	-232.78	-7.82	-222.28	48.59	-36.73	-893.87	-39.17	-891.43	-45.66
67	2	152	99.36	19.02	-870.66	8.34	-859.99	96.88	29.65	-3741.65	18.73	-3730.72	-202.69
		194	94.37	69.99	-750.95	36.83	-717.80	-161.62	-138.94	-3821.16	-140.08	-3820.02	-64.79
		208	89.13	9.07	-918.87	-39.96	-869.83	-207.60	93.05	-2893.69	85.94	-2886.58	-145.55
		166	81.90	7.90	-775.65	-17.09	-750.67	137.66	60.85	-2950.55	50.12	-2939.83	-179.37
67	31	152	34.33	1.46	-320.20	-0.19	-318.55	22.95	-83.02	-1266.71	-83.52	-1266.21	-24.20
		194	33.64	11.41	-291.82	8.47	-288.88	-29.71	-34.99	-1276.92	-34.99	-1276.92	1.54
		208	32.15	-1.26	-334.58	-10.66	-325.19	-55.17	5.46	-1045.34	5.08	-1044.95	-20.11
		166	30.09	-0.67	-298.89	-6.82	-292.73	42.40	-57.16	-1063.05	-58.63	-1061.58	-38.48
67	63	152	34.28	1.30	-319.01	-0.11	-317.59	21.25	-81.66	-1265.36	-82.08	-1264.94	-22.21
		194	33.53	12.08	-289.88	8.79	-286.59	-31.35	-33.46	-1275.17	-33.47	-1275.16	3.26
		208	32.04	-0.36	-332.75	-10.23	-322.88	-56.42	6.54	-1043.58	6.22	-1043.26	-18.29
		166	30.03	-0.84	-297.56	-6.65	-291.75	41.09	-56.27	-1061.69	-57.59	-1060.37	-36.39
67	85	152	34.24	1.21	-318.29	-0.07	-317.01	20.22	-80.80	-1264.51	-81.17	-1264.14	-20.98
		194	33.46	12.51	-288.71	8.99	-285.20	-32.35	-32.49	-1274.06	-32.50	-1274.05	4.32
		208	31.97	0.20	-331.64	-9.96	-321.47	-57.17	7.22	-1042.46	6.94	-1042.18	-17.17
		166	29.99	-0.95	-296.75	-6.54	-291.15	40.30	-55.70	-1060.83	-56.93	-1059.61	-35.11
67	87	152	70.80	12.76	-622.80	5.55	-615.59	67.28	8.80	-2662.84	1.66	-2655.70	-137.93
		194	67.36	47.99	-538.80	25.75	-516.56	-112.06	-97.03	-2717.24	-97.72	-2716.55	-42.62
		208	63.67	5.95	-656.67	-27.97	-622.75	-146.02	62.86	-2067.99	58.22	-2063.35	-99.32
		166	58.60	5.08	-556.61	-12.26	-539.27	97.15	33.06	-2108.40	25.83	-2101.17	-124.26
67	97	152	68.41	11.57	-603.99	4.99	-597.41	63.32	-2.64	-2569.30	-8.93	-2563.00	-126.98
		194	65.20	44.61	-524.14	24.40	-503.94	-105.27	-89.95	-2619.43	-90.51	-2618.86	-37.71
		208	61.68	5.26	-636.25	-26.53	-604.45	-139.24	59.30	-2003.40	55.20	-1999.31	-91.79
		166	56.84	4.38	-541.52	-11.93	-525.20	92.95	22.80	-2042.51	16.19	-2035.89	-116.68
67	102	152	34.24	1.21	-318.29	-0.07	-317.01	20.22	-80.80	-1264.51	-81.17	-1264.14	-20.98
		194	33.46	12.51	-288.71	8.99	-285.20	-32.35	-32.49	-1274.06	-32.50	-1274.05	4.32
		208	31.97	0.20	-331.64	-9.96	-321.47	-57.17	7.22	-1042.46	6.94	-1042.18	-17.17
		166	29.99	-0.95	-296.75	-6.54	-291.15	40.30	-55.70	-1060.83	-56.93	-1059.61	-35.11
68	2	157	115.48	12.11	-1076.34	6.49	-1070.71	78.05	42.29	-4112.53	31.89	-4102.13	-207.61
		199	109.79	53.06	-950.64	33.20	-930.79	-139.76	-231.06	-4223.62	-231.49	-4223.18	-41.56
		194	105.67	-3.24	-1103.23	-34.96	-1071.51	-184.10	29.60	-3397.41	21.60	-3389.41	-165.41
		152	100.11	2.17	-982.76	-12.42	-968.17	118.98	25.09	-3454.92	17.12	-3446.95	-166.39
68	31	157	37.65	-0.11	-364.62	-0.63	-364.10	13.73	-91.71	-1341.50	-91.93	-1341.27	-16.79
		199	37.26	6.75	-343.89	5.87	-343.01	-17.55	-37.38	-1347.71	-37.41	-1347.68	6.15
		194	36.16	-2.74	-373.87	-7.76	-368.85	-42.86	-8.90	-1182.06	-9.26	-1181.71	-20.40
		152	34.61	-2.17	-348.94	-5.38	-345.73	33.21	-73.16	-1195.97	-73.89	-1195.24	-28.58
68	63	157	37.57	-0.12	-363.23	-0.55	-362.80	12.44	-89.85	-1339.83	-90.04	-1339.65	-15.17

Elem.	Cmb	Nodo	Von Mises	N max	N min	N 1	N 2	N 1-2	M max	M min	M 1	M 2	M 1-2
		199	37.10	7.27	-341.01	6.25	-339.99	-18.79	-35.32	-1345.36	-35.37	-1345.32	7.54
		194	36.00	-2.07	-371.04	-7.29	-365.81	-43.60	-7.30	-1179.73	-7.60	-1179.43	-18.80
		152	34.54	-2.18	-347.49	-5.25	-344.42	32.43	-71.74	-1194.34	-72.38	-1193.70	-26.75
68	85	157	37.53	-0.12	-362.39	-0.50	-362.01	11.66	-88.70	-1338.80	-88.86	-1338.64	-14.17
		199	37.00	7.59	-339.26	6.49	-338.15	-19.55	-34.04	-1343.90	-34.09	-1343.85	8.39
		194	35.90	-1.65	-369.32	-7.01	-363.96	-44.05	-6.29	-1178.28	-6.56	-1178.01	-17.81
		152	34.49	-2.19	-346.61	-5.18	-343.62	31.96	-70.85	-1193.33	-71.43	-1192.74	-25.62
68	87	157	81.99	7.99	-765.81	4.26	-762.08	53.59	16.13	-2919.96	9.41	-2913.24	-140.30
		199	78.11	36.07	-678.69	23.00	-665.61	-95.78	-158.63	-2994.88	-158.88	-2994.63	-26.59
		194	75.22	-2.49	-784.62	-24.24	-762.87	-128.61	18.74	-2421.89	13.53	-2416.68	-112.65
		152	71.34	1.12	-701.35	-8.97	-691.26	83.58	7.19	-2462.30	1.89	-2457.00	-114.34
68	97	157	78.92	7.11	-738.75	3.77	-735.40	49.83	2.82	-2810.83	-3.03	-2804.97	-128.18
		199	75.36	33.22	-656.97	21.58	-645.33	-88.87	-145.57	-2878.88	-145.76	-2878.69	-22.71
		194	72.61	-2.57	-756.58	-22.78	-736.38	-121.77	17.73	-2340.45	13.14	-2335.87	-103.86
		152	68.92	0.68	-678.63	-8.78	-669.17	79.60	-2.60	-2379.15	-7.37	-2374.37	-106.44
68	102	157	37.53	-0.12	-362.39	-0.50	-362.01	11.66	-88.70	-1338.80	-88.86	-1338.64	-14.17
		199	37.00	7.59	-339.26	6.49	-338.15	-19.55	-34.04	-1343.90	-34.09	-1343.85	8.39
		194	35.90	-1.65	-369.32	-7.01	-363.96	-44.05	-6.29	-1178.28	-6.56	-1178.01	-17.81
		152	34.49	-2.19	-346.61	-5.18	-343.62	31.96	-70.85	-1193.33	-71.43	-1192.74	-25.62
69	2	163	128.91	5.05	-1251.43	2.19	-1248.57	59.89	58.22	-4412.92	49.19	-4403.88	-200.81
		205	123.04	41.58	-1127.12	29.75	-1115.28	-117.03	-343.24	-4574.39	-343.28	-4574.35	-13.12
		199	120.03	-9.27	-1266.11	-30.43	-1244.95	-161.70	-45.08	-3839.79	-53.63	-3831.24	-179.94
		157	115.62	-0.55	-1160.66	-9.23	-1151.97	100.00	-6.89	-3891.75	-13.86	-3884.78	-164.41
69	31	163	39.65	-1.19	-393.23	-1.24	-393.19	4.29	-96.16	-1381.80	-96.22	-1381.74	-8.67
		205	39.61	3.29	-381.00	3.21	-380.92	-5.54	-37.27	-1384.34	-37.35	-1384.26	10.33
		199	38.94	-2.54	-398.76	-4.94	-396.36	-30.74	-20.22	-1284.87	-20.52	-1284.57	-19.47
		157	37.84	-2.56	-383.71	-4.06	-382.21	23.84	-85.09	-1294.47	-85.39	-1294.17	-19.01
69	63	163	39.57	-1.12	-391.70	-1.15	-391.67	3.44	-93.94	-1379.81	-93.99	-1379.76	-7.64
		205	39.42	3.74	-377.51	3.64	-377.40	-6.37	-34.82	-1381.33	-34.91	-1381.23	11.20
		199	38.75	-2.00	-395.29	-4.46	-392.83	-31.00	-18.10	-1281.87	-18.36	-1281.60	-18.29
		157	37.75	-2.50	-382.15	-3.97	-380.68	23.58	-83.18	-1292.52	-83.43	-1292.26	-17.68
69	85	163	39.51	-1.07	-390.76	-1.09	-390.74	2.93	-92.56	-1378.58	-92.60	-1378.55	-7.00
		205	39.30	4.02	-375.38	3.90	-375.26	-6.87	-33.30	-1379.47	-33.40	-1379.37	11.74
		199	38.63	-1.67	-393.18	-4.17	-390.68	-31.15	-16.78	-1280.02	-17.02	-1279.78	-17.57
		157	37.69	-2.46	-381.20	-3.91	-379.75	23.41	-81.98	-1291.31	-82.22	-1291.08	-16.86
69	87	163	91.21	3.14	-886.31	1.31	-884.48	40.32	26.22	-3125.50	20.44	-3119.72	-134.81
		205	87.25	27.93	-801.14	20.35	-793.55	-78.93	-233.29	-3233.50	-233.31	-3233.48	-7.18
		199	85.16	-6.53	-896.37	-20.84	-882.06	-111.95	-32.47	-2730.35	-38.02	-2724.80	-122.30
		157	82.10	-0.72	-824.57	-6.68	-818.62	69.79	-15.65	-2766.55	-20.20	-2762.00	-111.85
69	97	163	87.49	2.61	-851.08	1.03	-849.50	36.69	11.34	-3001.24	6.37	-2996.27	-122.25
		205	83.90	25.40	-772.10	18.85	-765.55	-71.97	-212.65	-3098.52	-212.65	-3098.51	-4.78
		199	81.92	-6.21	-860.41	-19.33	-847.30	-105.01	-29.80	-2631.96	-34.67	-2627.09	-112.51
		157	79.05	-1.01	-794.26	-6.54	-788.73	66.02	-24.74	-2666.35	-28.76	-2662.33	-102.98
69	102	163	39.51	-1.07	-390.76	-1.09	-390.74	2.93	-92.56	-1378.58	-92.60	-1378.55	-7.00
		205	39.30	4.02	-375.38	3.90	-375.26	-6.87	-33.30	-1379.47	-33.40	-1379.37	11.74
		199	38.63	-1.67	-393.18	-4.17	-390.68	-31.15	-16.78	-1280.02	-17.02	-1279.78	-17.57
		157	37.69	-2.46	-381.20	-3.91	-379.75	23.41	-81.98	-1291.31	-82.22	-1291.08	-16.86
70	2	168	139.60	-3.08	-1392.84	-4.25	-1391.67	40.25	47.98	-4659.01	42.20	-4653.22	-164.96
		210	134.44	31.16	-1281.47	25.36	-1275.67	-87.06	-459.88	-4880.54	-459.98	-4880.44	21.12
		205	132.13	-10.80	-1403.63	-25.13	-1389.30	-140.55	-139.00	-4226.95	-146.79	-4219.16	-178.34
		163	128.39	-3.39	-1308.36	-8.81	-1302.94	83.95	-42.14	-4260.30	-49.35	-4253.09	-174.27
70	31	168	40.35	-1.95	-405.91	-2.01	-405.84	-5.27	-96.54	-1387.30	-96.54	-1387.30	1.21
		210	40.68	0.63	-402.49	0.53	-402.38	6.38	-34.43	-1386.10	-34.59	-1385.94	14.98
		205	40.45	-1.30	-408.40	-2.17	-407.52	-18.83	-28.72	-1352.91	-28.95	-1352.68	-17.39
		163	39.75	-2.42	-402.70	-2.93	-402.19	14.29	-92.88	-1358.20	-92.95	-1358.13	-9.65
70	63	168	40.26	-1.84	-404.32	-1.92	-404.24	-5.66	-94.17	-1385.20	-94.17	-1385.20	0.81
		210	40.47	1.08	-398.74	0.99	-398.65	5.99	-31.82	-1382.75	-31.98	-1382.59	14.63
		205	40.24	-0.85	-404.65	-1.70	-403.79	-18.57	-26.23	-1349.57	-26.44	-1349.36	-16.79
		163	39.65	-2.32	-401.12	-2.85	-400.59	14.54	-90.62	-1356.11	-90.69	-1356.05	-8.98
70	85	168	40.20	-1.78	-403.35	-1.87	-403.26	-5.90	-92.70	-1383.91	-92.70	-1383.91	0.56
		210	40.34	1.35	-396.47	1.26	-396.39	5.76	-30.22	-1380.69	-30.37	-1380.54	14.42
		205	40.12	-0.57	-402.37	-1.42	-401.52	-18.41	-24.68	-1347.53	-24.89	-1347.32	-16.42
		163	39.60	-2.27	-400.15	-2.81	-399.61	14.69	-89.22	-1354.83	-89.28	-1354.77	-8.57
70	87	168	98.42	-2.39	-982.24	-3.08	-981.55	26.05	19.42	-3290.32	15.77	-3286.67	-109.90
		210	94.99	20.62	-906.85	17.07	-903.30	-57.27	-310.62	-3437.78	-310.70	-3437.70	16.01
		205	93.42	-7.43	-989.25	-16.94	-979.74	-96.15	-96.12	-2997.48	-101.18	-2992.41	-121.08
		163	90.87	-2.60	-925.56	-6.25	-921.91	57.93	-40.18	-3020.66	-44.80	-3016.03	-117.32
70	97	168	94.08	-2.48	-939.13	-3.03	-938.58	22.64	5.24	-3150.34	2.14	-3147.25	-98.80
		210	91.01	18.45	-870.12	15.54	-867.21	-50.76	-281.80	-3282.55	-281.89	-3282.46	16.46
		205	89.56	-6.91	-945.23	-15.44	-936.70	-89.05	-88.15	-2881.62	-92.59	-2877.18	-111.26
		163	87.20	-2.68	-887.73	-6.01	-884.40	54.15	-47.88	-2903.68	-51.88	-2899.68	-106.76
70	102	168	40.20	-1.78	-403.35	-1.87	-403.26	-5.90	-92.70	-1383.91	-92.70	-1383.91	0.56
		210	40.34	1.35	-396.47	1.26	-396.39	5.76	-30.22	-1380.69	-30.37	-1380.54	14.42
		205	40.12	-0.57	-402.37	-1.42	-401.52	-18.41	-24.68	-1347.53	-24.89	-1347.32	-16.42
		163	39.60	-2.27	-400.15	-2.81	-399.61	14.69	-89.22	-1354.83	-89.28	-1354.77	-8.57

Elem.	Cmb	Nodo	Von Mises	N max	N min	N 1	N 2	N 1-2	M max	M min	M 1	M 2	M 1-2
71	2	156	148.08	-13.87	-1490.53	-13.91	-1490.50	-7.49	-30.34	-4941.88	-30.71	-4941.51	-42.43
		198	145.27	16.37	-1418.00	16.14	-1417.77	-18.03	-564.00	-5203.86	-564.10	-5203.76	21.39
		210	141.88	-6.37	-1506.30	-16.80	-1495.86	-124.69	-259.90	-4584.03	-264.26	-4579.67	-137.19
		168	138.61	-8.01	-1429.28	-12.40	-1424.89	78.88	-88.60	-4568.16	-97.58	-4559.19	-200.28
71	24	156	39.74	-2.42	-402.69	-2.93	-402.18	-14.31	-92.87	-1358.17	-92.94	-1358.10	9.58
		198	40.45	-1.30	-408.38	-2.17	-407.51	18.82	-28.80	-1352.92	-29.02	-1352.69	17.35
		210	40.68	0.63	-402.49	0.53	-402.39	-6.39	-34.39	-1386.09	-34.55	-1385.93	-15.01
		168	40.35	-1.95	-405.90	-2.01	-405.84	5.25	-96.59	-1387.31	-96.59	-1387.31	-1.30
71	56	156	39.65	-2.32	-401.10	-2.86	-400.57	-14.56	-90.61	-1356.08	-90.68	-1356.02	8.91
		198	40.24	-0.85	-404.63	-1.70	-403.78	18.56	-26.30	-1349.58	-26.52	-1349.37	16.74
		210	40.47	1.07	-398.75	0.98	-398.66	-6.00	-31.78	-1382.74	-31.94	-1382.58	-14.67
		168	40.26	-1.84	-404.31	-1.92	-404.23	5.64	-94.22	-1385.21	-94.22	-1385.21	-0.90
71	85	156	39.60	-2.26	-400.14	-2.81	-399.60	-14.72	-89.21	-1354.80	-89.27	-1354.75	8.50
		198	40.12	-0.57	-402.35	-1.42	-401.51	18.40	-24.76	-1347.54	-24.96	-1347.33	16.38
		210	40.34	1.35	-396.48	1.26	-396.39	-5.77	-30.18	-1380.68	-30.33	-1380.53	-14.46
		168	40.20	-1.78	-403.35	-1.87	-403.26	5.87	-92.75	-1383.92	-92.75	-1383.92	-0.66
71	87	156	104.00	-9.60	-1046.99	-9.65	-1046.94	-6.96	-32.16	-3475.19	-32.37	-3474.98	-27.15
		198	102.19	10.66	-998.80	10.57	-998.71	-9.56	-379.31	-3648.90	-379.40	-3648.82	16.44
		210	99.95	-4.30	-1056.82	-11.03	-1050.09	-83.90	-177.37	-3240.03	-180.22	-3237.18	-93.39
		168	97.77	-5.66	-1006.55	-8.52	-1003.70	53.37	-71.76	-3229.65	-77.42	-3223.98	-133.61
71	97	156	99.02	-8.99	-997.00	-9.06	-996.93	-8.27	-40.56	-3312.89	-40.73	-3312.73	-23.24
		198	97.45	9.36	-953.82	9.32	-953.78	-6.09	-342.89	-3468.03	-342.99	-3467.93	17.13
		210	95.46	-3.91	-1005.17	-9.76	-999.32	-76.29	-161.94	-3104.53	-164.46	-3102.01	-86.06
		168	93.49	-5.42	-961.01	-7.92	-958.51	48.84	-76.92	-3095.63	-81.73	-3090.83	-120.32
71	102	156	39.60	-2.26	-400.14	-2.81	-399.60	-14.72	-89.21	-1354.80	-89.27	-1354.75	8.50
		198	40.12	-0.57	-402.35	-1.42	-401.51	18.40	-24.76	-1347.54	-24.96	-1347.33	16.38
		210	40.34	1.35	-396.48	1.26	-396.39	-5.77	-30.18	-1380.68	-30.33	-1380.53	-14.46
		168	40.20	-1.78	-403.35	-1.87	-403.26	5.87	-92.75	-1383.92	-92.75	-1383.92	-0.66
72	2	164	147.19	-20.26	-1510.07	-23.88	-1506.45	-73.36	-72.15	-4867.01	-74.62	-4864.55	108.79
		206	148.13	4.13	-1510.24	-0.09	-1506.02	79.85	-560.48	-5110.21	-560.72	-5109.97	33.32
		198	148.82	2.37	-1522.98	-1.86	-1518.75	-80.23	-428.20	-5053.36	-429.26	-5052.31	-69.87
		156	147.06	-13.58	-1492.95	-15.70	-1490.82	56.00	-153.78	-4948.23	-161.96	-4940.06	-197.80
72	24	164	37.83	-2.56	-383.68	-4.06	-382.18	-23.86	-85.12	-1294.44	-85.42	-1294.14	18.99
		206	38.94	-2.54	-398.74	-4.94	-396.34	30.74	-20.33	-1284.88	-20.63	-1284.58	19.42
		198	39.61	3.29	-380.99	3.21	-380.91	5.54	-37.27	-1384.33	-37.35	-1384.25	-10.36
		156	39.65	-1.19	-393.22	-1.24	-393.17	-4.31	-96.24	-1381.79	-96.30	-1381.74	8.55
72	56	164	37.74	-2.50	-382.12	-3.97	-380.65	-23.60	-83.21	-1292.48	-83.46	-1292.22	17.65
		206	38.75	-2.00	-395.27	-4.46	-392.81	30.99	-18.20	-1281.88	-18.47	-1281.61	18.24
		198	39.42	3.74	-377.50	3.64	-377.39	6.36	-34.82	-1381.31	-34.91	-1381.22	-11.23
		156	39.57	-1.12	-391.68	-1.15	-391.65	-3.46	-94.02	-1379.80	-94.07	-1379.76	7.52
72	85	164	37.69	-2.46	-381.17	-3.92	-379.72	-23.44	-82.01	-1291.28	-82.25	-1291.04	16.83
		206	38.63	-1.67	-393.15	-4.17	-390.66	31.14	-16.88	-1280.03	-17.13	-1279.79	17.52
		198	39.30	4.02	-375.38	3.90	-375.25	6.86	-33.30	-1379.46	-33.40	-1379.36	-11.77
		156	39.51	-1.07	-390.74	-1.09	-390.72	-2.95	-92.65	-1378.58	-92.68	-1378.54	6.89
72	87	164	103.15	-13.84	-1057.53	-16.44	-1054.93	-52.03	-59.04	-3416.84	-60.71	-3415.17	74.77
		206	103.90	2.49	-1059.21	-0.62	-1056.10	57.39	-375.91	-3577.47	-376.10	-3577.28	24.55
		198	104.44	1.88	-1065.13	-0.72	-1062.53	-52.57	-289.91	-3552.83	-290.63	-3552.12	-48.15
		156	103.31	-9.30	-1047.29	-10.61	-1045.98	36.94	-115.23	-3482.28	-120.33	-3477.18	-130.95
72	97	164	97.99	-12.80	-1003.93	-15.33	-1001.40	-50.03	-63.75	-3251.70	-65.27	-3250.18	69.63
		206	98.79	1.98	-1007.05	-1.13	-1003.94	55.91	-338.75	-3394.51	-338.95	-3394.31	24.59
		198	99.37	2.02	-1009.75	-0.11	-1007.62	-46.37	-263.60	-3385.93	-264.25	-3385.28	-44.97
		156	98.39	-8.61	-995.94	-9.70	-994.85	32.84	-116.08	-3322.24	-120.35	-3317.97	-116.89
72	102	164	37.69	-2.46	-381.17	-3.92	-379.72	-23.44	-82.01	-1291.28	-82.25	-1291.04	16.83
		206	38.63	-1.67	-393.15	-4.17	-390.66	31.14	-16.88	-1280.03	-17.13	-1279.79	17.52
		198	39.30	4.02	-375.38	3.90	-375.25	6.86	-33.30	-1379.46	-33.40	-1379.36	-11.77
		156	39.51	-1.07	-390.74	-1.09	-390.72	-2.95	-92.65	-1378.58	-92.68	-1378.54	6.89
73	2	153	137.70	-17.79	-1424.61	-29.68	-1412.72	-128.78	-72.58	-4568.80	-85.36	-4556.03	239.32
		195	142.79	-0.29	-1513.37	-20.09	-1493.56	171.97	-473.29	-4736.19	-474.33	-4735.15	66.76
		206	145.63	17.53	-1422.26	17.53	-1422.25	3.24	-547.99	-5203.78	-548.16	-5203.60	-28.30
		164	146.55	-15.77	-1462.23	-15.79	-1462.21	4.67	-141.80	-4993.68	-144.21	-4991.27	-108.11
73	24	153	34.61	-2.17	-348.90	-5.38	-345.69	-33.23	-73.23	-1195.93	-73.96	-1195.20	28.60
		195	36.15	-2.74	-373.84	-7.76	-368.82	42.85	-9.03	-1182.07	-9.38	-1181.72	20.36
		206	37.26	6.75	-343.88	5.87	-343.00	17.54	-37.43	-1347.70	-37.46	-1347.67	-6.16
		164	37.64	-0.11	-364.59	-0.63	-364.07	-13.76	-91.82	-1341.48	-92.04	-1341.25	16.66
73	56	153	34.53	-2.18	-347.45	-5.26	-344.38	-32.45	-71.81	-1194.30	-72.45	-1193.66	26.76
		195	36.00	-2.07	-371.01	-7.29	-365.79	43.59	-7.42	-1179.73	-7.72	-1179.43	18.76
		206	37.10	7.27	-341.00	6.25	-339.98	18.79	-35.37	-1345.35	-35.41	-1345.31	-7.55
		164	37.57	-0.12	-363.20	-0.55	-362.77	-12.46	-89.96	-1339.81	-90.15	-1339.63	15.04
73	85	153	34.49	-2.19	-346.57	-5.18	-343.57	-31.97	-70.92	-1193.29	-71.51	-1192.71	25.64
		195	35.90	-1.65	-369.29	-7.01	-363.94	44.04	-6.42	-1178.28	-6.69	-1178.02	17.77
		206	37.00	7.59	-339.25	6.48	-338.14	19.54	-34.09	-1343.89	-34.14	-1343.84	-8.41
		164	37.52	-0.12	-362.36	-0.50	-361.98	-11.68	-88.81	-1338.78	-88.96	-1338.63	14.05
73	87	153	96.40	-12.15	-995.95	-20.48	-987.62	-90.12	-57.98	-3204.84	-66.44	-3196.38	162.96
		195	99.98	-0.41	-1058.15	-14.33	-1044.23	120.52	-316.38	-3314.57	-317.11	-3313.83	46.88
		206	102.01	12.57	-993.27	12.55	-993.25	4.77	-369.87	-3648.37	-369.99	-3648.25	-19.99

Elem.	Cmb	Nodo	Von Mises	N max	N min	N 1	N 2	N 1-2	M max	M min	M 1	M 2	M 1-2
		164	102.70	-10.59	-1023.07	-10.59	-1023.07	1.56	-106.55	-3507.45	-108.00	-3506.00	-70.20
73	97	153	91.48	-11.23	-943.78	-19.14	-935.88	-85.48	-61.39	-3047.39	-68.97	-3039.81	150.22
		195	94.90	-0.60	-1002.86	-13.85	-989.60	114.50	-283.75	-3143.98	-284.45	-3143.28	44.73
		206	96.88	12.23	-940.24	12.18	-940.19	6.97	-335.66	-3467.05	-335.78	-3466.94	-19.17
		164	97.57	-9.60	-970.29	-9.60	-970.29	-0.20	-107.59	-3339.61	-108.75	-3338.45	-61.23
73	102	153	34.49	-2.19	-346.57	-5.18	-343.57	-31.97	-70.92	-1193.29	-71.51	-1192.71	25.64
		195	35.90	-1.65	-369.29	-7.01	-363.94	44.04	-6.42	-1178.28	-6.69	-1178.02	17.77
		206	37.00	7.59	-339.25	6.48	-338.14	19.54	-34.09	-1343.89	-34.14	-1343.84	-8.41
		164	37.52	-0.12	-362.36	-0.50	-361.98	-11.68	-88.81	-1338.78	-88.96	-1338.63	14.05
74	2	161	119.82	-6.26	-1240.53	-32.64	-1214.15	-178.51	-20.49	-4036.10	-49.65	-4006.94	340.98
		203	129.03	7.36	-1416.52	-40.70	-1368.46	257.14	-315.97	-4100.47	-318.53	-4097.91	98.45
		195	133.81	43.55	-1220.03	36.37	-1212.85	95.01	-605.19	-5091.58	-605.26	-5091.51	17.34
		153	137.66	-11.19	-1330.81	-13.14	-1328.85	-50.77	-74.36	-4802.76	-74.41	-4802.72	14.77
74	40	161	30.10	-0.85	-298.35	-6.61	-292.60	-40.96	-56.33	-1063.64	-57.63	-1062.34	36.13
		203	32.10	-0.26	-333.46	-10.15	-323.58	56.53	6.48	-1045.52	6.17	-1045.21	17.96
		195	33.60	12.14	-290.63	8.82	-287.31	31.52	-33.45	-1277.12	-33.46	-1277.11	-3.56
		153	34.35	1.27	-319.85	-0.12	-318.46	-21.07	-81.72	-1267.32	-82.12	-1266.92	21.77
74	72	161	30.03	-0.91	-297.33	-6.57	-291.67	-40.56	-56.01	-1061.89	-57.26	-1060.63	35.53
		203	32.02	0.02	-332.31	-10.03	-322.26	56.92	6.86	-1043.64	6.57	-1043.35	17.45
		195	33.51	12.36	-289.43	8.93	-285.99	32.03	-32.91	-1275.24	-32.92	-1275.22	-4.03
		153	34.28	1.24	-318.86	-0.09	-317.54	-20.55	-81.24	-1265.57	-81.62	-1265.19	21.21
74	85	161	29.99	-0.94	-296.70	-6.54	-291.10	-40.32	-55.80	-1060.80	-57.03	-1059.57	35.16
		203	31.97	0.20	-331.60	-9.96	-321.44	57.17	7.10	-1042.47	6.82	-1042.19	17.14
		195	33.46	12.50	-288.69	8.99	-285.18	32.34	-32.57	-1274.06	-32.59	-1274.04	-4.32
		153	34.24	1.22	-318.25	-0.07	-316.96	-20.24	-80.93	-1264.48	-81.30	-1264.11	20.86
74	87	161	83.88	-4.30	-866.58	-22.63	-848.25	-124.38	-21.42	-2831.85	-40.71	-2812.57	232.01
		203	90.28	4.93	-988.56	-28.46	-955.17	179.05	-209.71	-2872.63	-211.44	-2870.90	67.92
		195	93.67	30.66	-851.81	25.44	-846.59	67.65	-407.81	-3564.25	-407.85	-3564.21	10.99
		153	96.34	-7.32	-929.61	-8.77	-928.16	-36.55	-60.40	-3370.41	-60.44	-3370.36	12.63
74	97	161	79.59	-4.00	-820.52	-21.27	-803.26	-117.46	-26.61	-2693.39	-43.84	-2676.16	213.66
		203	85.63	4.46	-935.07	-26.98	-903.63	168.97	-185.91	-2727.65	-187.50	-2726.05	63.60
		195	88.88	29.27	-806.09	24.13	-800.95	65.31	-369.62	-3381.78	-369.65	-3381.75	9.27
		153	91.39	-6.44	-880.17	-7.90	-878.71	-35.66	-64.85	-3206.25	-64.91	-3206.18	14.26
74	102	161	29.99	-0.94	-296.70	-6.54	-291.10	-40.32	-55.80	-1060.80	-57.03	-1059.57	35.16
		203	31.97	0.20	-331.60	-9.96	-321.44	57.17	7.10	-1042.47	6.82	-1042.19	17.14
		195	33.46	12.50	-288.69	8.99	-285.18	32.34	-32.57	-1274.06	-32.59	-1274.04	-4.32
		153	34.24	1.22	-318.25	-0.07	-316.96	-20.24	-80.93	-1264.48	-81.30	-1264.11	20.86
75	2	155	92.88	10.81	-962.64	-31.69	-920.15	-198.89	96.84	-3167.62	56.44	-3127.21	360.92
		197	105.75	23.66	-1205.84	-56.95	-1125.23	304.32	-91.56	-3148.44	-99.79	-3140.21	158.36
		203	114.13	89.05	-941.75	51.23	-903.93	193.80	-581.54	-4698.65	-582.04	-4698.15	45.39
		161	120.22	6.10	-1097.08	-6.03	-1084.95	-115.03	38.45	-4388.97	32.45	-4382.97	162.89
75	40	155	24.31	2.90	-234.47	-7.91	-223.66	-49.49	-37.21	-897.06	-39.76	-894.51	46.76
		197	27.02	4.78	-282.97	-13.16	-265.03	69.56	24.25	-876.12	23.95	-875.82	16.62
		203	28.85	19.47	-226.68	11.22	-218.43	44.31	-29.39	-1173.44	-29.39	-1173.44	1.62
		161	29.77	3.63	-260.30	0.27	-256.94	-29.60	-69.11	-1158.83	-69.86	-1158.09	28.49
75	72	155	24.24	2.77	-233.39	-7.85	-222.77	-48.94	-37.00	-895.08	-39.49	-892.59	46.13
		197	26.95	5.21	-282.16	-13.05	-263.90	70.10	24.55	-873.98	24.27	-873.69	16.08
		203	28.77	19.80	-225.81	11.30	-217.30	44.92	-28.99	-1171.32	-28.99	-1171.32	1.10
		161	29.70	3.53	-259.29	0.29	-256.06	-28.97	-68.77	-1156.88	-69.49	-1156.17	27.87
75	85	155	24.20	2.69	-232.72	-7.81	-222.22	-48.60	-36.86	-893.85	-39.31	-891.40	45.75
		197	26.90	5.47	-281.66	-12.99	-263.20	70.42	24.74	-872.65	24.47	-872.38	15.75
		203	28.72	20.01	-225.27	11.34	-216.60	45.29	-28.74	-1170.00	-28.74	-1170.00	0.77
		161	29.65	3.47	-258.66	0.31	-255.51	-28.59	-68.56	-1155.67	-69.25	-1154.97	27.49
75	87	155	65.14	7.56	-672.79	-22.17	-643.06	-139.07	59.28	-2230.56	32.38	-2203.66	246.71
		197	74.08	16.50	-841.45	-39.70	-785.25	212.27	-57.87	-2215.18	-63.26	-2209.79	107.68
		203	79.91	62.04	-657.87	35.67	-631.50	135.24	-391.54	-3288.42	-391.86	-3288.10	30.37
		161	84.10	4.53	-765.87	-3.98	-757.37	-80.50	16.47	-3080.05	12.40	-3075.98	112.26
75	97	155	61.94	7.17	-637.36	-21.02	-609.17	-131.82	48.55	-2129.33	24.34	-2105.12	228.35
		197	70.36	15.60	-795.84	-37.50	-742.73	200.68	-46.95	-2112.60	-51.73	-2107.83	99.21
		203	75.85	58.57	-622.91	33.65	-597.99	127.91	-354.47	-3119.29	-354.74	-3119.01	27.42
		161	79.75	4.55	-724.67	-3.54	-716.59	-76.36	6.03	-2930.05	2.28	-2926.30	104.85
75	102	155	24.20	2.69	-232.72	-7.81	-222.22	-48.60	-36.86	-893.85	-39.31	-891.40	45.75
		197	26.90	5.47	-281.66	-12.99	-263.20	70.42	24.74	-872.65	24.47	-872.38	15.75
		203	28.72	20.01	-225.27	11.34	-216.60	45.29	-28.74	-1170.00	-28.74	-1170.00	0.77
		161	29.65	3.47	-258.66	0.31	-255.51	-28.59	-68.56	-1155.67	-69.25	-1154.97	27.49
76	2	167	63.98	39.06	-635.72	-28.00	-568.67	-201.87	171.18	-2373.52	119.41	-2321.74	359.25
		209	80.57	55.37	-920.73	-65.97	-799.39	322.05	121.86	-2307.95	105.95	-2292.04	195.97
		197	87.25	158.22	-643.90	58.33	-544.01	264.85	-448.44	-3888.96	-449.84	-3887.56	69.44
		155	93.36	34.62	-788.69	2.14	-756.21	-160.25	193.08	-3620.04	171.03	-3597.98	289.15
76	40	167	17.29	13.69	-160.73	-8.62	-138.42	-58.26	-15.29	-696.20	-20.37	-691.12	58.56
		209	20.95	16.57	-223.03	-16.01	-190.45	82.13	48.25	-672.23	47.95	-671.93	14.75
		197	23.00	32.87	-153.93	13.28	-134.34	57.23	-22.88	-1035.43	-22.95	-1035.36	8.28
		155	23.91	8.70	-186.50	0.97	-178.77	-38.07	-51.66	-1015.86	-52.96	-1014.57	35.29
76	72	167	17.21	13.41	-159.48	-8.55	-137.53	-57.57	-15.10	-694.03	-20.09	-689.04	57.98
		209	20.89	17.25	-222.66	-15.92	-189.49	82.81	48.56	-669.83	48.28	-669.54	14.24

Elem.	Cmb	Nodo	Von Mises	N max	N min	N 1	N 2	N 1-2	M max	M min	M 1	M 2	M 1-2
		197	22.93	33.46	-153.51	13.34	-133.39	57.94	-22.54	-1033.05	-22.60	-1032.99	7.75
		155	23.83	8.49	-185.36	1.01	-177.88	-37.35	-51.42	-1013.75	-52.67	-1012.49	34.69
76	85	167	17.17	13.24	-158.72	-8.50	-136.98	-57.14	-14.99	-692.69	-19.93	-687.75	57.62
		209	20.85	17.66	-222.43	-15.86	-188.90	83.21	48.75	-668.34	48.48	-668.07	13.92
		197	22.89	33.82	-153.24	13.37	-132.80	58.36	-22.34	-1031.57	-22.39	-1031.52	7.41
		155	23.79	8.37	-184.66	1.03	-177.32	-36.91	-51.26	-1012.44	-52.48	-1011.21	34.31
76	87	167	44.93	27.76	-444.94	-19.80	-397.37	-142.20	111.84	-1674.42	76.95	-1639.53	247.19
		209	56.49	39.25	-643.46	-46.10	-558.12	225.80	87.40	-1627.40	77.10	-1617.10	132.51
		197	61.21	109.97	-449.68	40.67	-380.38	184.35	-301.96	-2730.17	-302.88	-2729.24	47.28
		155	65.41	24.19	-550.41	1.57	-527.79	-111.76	121.69	-2548.15	107.02	-2533.48	197.34
76	97	167	42.78	26.76	-422.13	-18.99	-376.38	-135.80	98.87	-1601.35	67.05	-1569.53	230.41
		209	53.70	37.73	-609.54	-43.66	-528.15	214.61	86.91	-1555.47	77.90	-1546.46	121.33
		197	58.22	103.59	-425.68	38.43	-360.52	173.90	-272.99	-2597.91	-273.81	-2597.09	43.57
		155	62.12	22.92	-520.63	1.55	-499.26	-105.63	102.92	-2431.58	89.73	-2418.39	182.37
76	102	167	17.17	13.24	-158.72	-8.50	-136.98	-57.14	-14.99	-692.69	-19.93	-687.75	57.62
		209	20.85	17.66	-222.43	-15.86	-188.90	83.21	48.75	-668.34	48.48	-668.07	13.92
		197	22.89	33.82	-153.24	13.37	-132.80	58.36	-22.34	-1031.57	-22.39	-1031.52	7.41
		155	23.79	8.37	-184.66	1.03	-177.32	-36.91	-51.26	-1012.44	-52.48	-1011.21	34.31
77	2	165	32.71	126.51	-335.69	-21.49	-187.69	-215.64	199.59	-1540.33	112.64	-1453.39	379.10
		207	55.49	130.79	-633.28	-68.84	-433.66	335.67	376.31	-1422.37	353.82	-1399.89	199.83
		209	61.69	263.50	-375.67	58.90	-171.07	298.18	-289.06	-3098.31	-296.11	-3091.25	140.59
		167	64.32	81.09	-449.81	11.29	-380.00	-179.41	278.38	-2888.43	241.38	-2851.42	340.32
77	38	165	9.24	43.62	-88.43	-7.30	-37.50	-64.28	7.54	-461.01	-2.93	-450.54	69.26
		207	14.34	44.15	-160.98	-17.68	-99.15	94.13	82.83	-430.57	82.58	-430.33	11.27
		209	16.46	66.40	-88.02	14.75	-36.38	72.85	-12.01	-861.82	-12.29	-861.54	15.42
		167	16.80	22.02	-102.53	3.03	-83.54	-44.77	-28.79	-838.12	-30.88	-836.03	41.09
77	70	165	9.19	44.73	-88.68	-7.41	-36.55	-65.09	8.01	-459.15	-2.66	-448.48	69.79
		207	14.24	43.71	-159.53	-17.76	-98.06	93.35	83.20	-428.14	82.92	-427.87	11.82
		209	16.35	66.05	-86.60	14.74	-35.29	72.11	-12.25	-859.39	-12.55	-859.09	15.96
		167	16.73	22.71	-102.29	3.00	-82.59	-45.55	-28.92	-836.12	-31.07	-833.96	41.69
77	85	165	9.16	45.41	-88.83	-7.47	-35.96	-65.59	8.30	-458.00	-2.50	-447.20	70.13
		207	14.17	43.44	-158.65	-17.81	-97.39	92.88	83.42	-426.65	83.13	-426.36	12.17
		209	16.29	65.85	-85.72	14.74	-34.62	71.65	-12.40	-857.89	-12.71	-857.57	16.30
		167	16.69	23.14	-102.15	2.98	-81.99	-46.03	-28.99	-834.89	-31.19	-832.69	42.06
77	87	165	23.01	90.30	-235.54	-15.32	-129.92	-152.51	133.85	-1087.64	74.76	-1028.55	262.08
		207	38.88	92.93	-443.29	-48.27	-302.09	236.17	261.49	-1004.63	246.97	-990.11	134.84
		209	43.29	184.44	-261.87	41.23	-118.66	208.34	-194.46	-2179.82	-199.10	-2175.18	95.90
		167	45.09	57.12	-313.46	7.92	-264.27	-125.74	181.40	-2036.61	156.76	-2011.97	232.49
77	97	165	21.95	87.39	-224.05	-14.82	-121.84	-146.23	121.74	-1041.13	67.35	-986.74	245.55
		207	36.94	89.54	-420.62	-45.88	-285.20	225.27	248.27	-961.76	235.59	-949.08	123.22
		209	41.19	175.00	-247.41	39.12	-111.54	197.31	-174.97	-2078.76	-179.10	-2074.63	88.56
		167	42.86	54.55	-296.05	7.54	-249.04	-119.46	159.58	-1946.79	137.38	-1924.60	215.08
77	102	165	9.16	45.41	-88.83	-7.47	-35.96	-65.59	8.30	-458.00	-2.50	-447.20	70.13
		207	14.17	43.44	-158.65	-17.81	-97.39	92.88	83.42	-426.65	83.13	-426.36	12.17
		209	16.29	65.85	-85.72	14.74	-34.62	71.65	-12.40	-857.89	-12.71	-857.57	16.30
		167	16.69	23.14	-102.15	2.98	-81.99	-46.03	-28.99	-834.89	-31.19	-832.69	42.06
78	2	151	34.06	345.03	-127.47	0.45	217.11	-209.95	223.22	-727.40	-4.33	-499.85	405.63
		193	33.74	259.26	-346.66	-60.38	-27.02	302.50	744.04	-420.94	711.22	-388.11	192.78
		207	47.82	472.90	-205.69	55.21	211.99	330.12	-96.34	-2255.98	-119.22	-2233.11	221.09
		165	44.05	241.15	-179.24	27.56	34.35	-210.17	331.28	-2110.28	269.21	-2048.21	384.31
78	21	151	9.67	109.78	-35.06	-1.00	75.73	-61.42	34.93	-194.47	5.52	-165.06	76.69
		193	9.14	90.60	-95.98	-16.23	10.85	92.30	137.32	-140.35	137.10	-140.13	7.88
		207	14.85	138.28	-52.33	14.81	71.14	91.05	2.07	-650.22	1.19	-649.34	23.96
		165	12.11	74.01	-37.21	7.96	28.84	-54.62	-4.40	-625.16	-8.37	-621.19	49.49
78	53	151	9.95	113.27	-37.83	-1.43	76.87	-64.61	37.27	-194.20	6.25	-163.18	78.85
		193	8.91	88.74	-92.16	-16.47	13.05	89.24	138.35	-137.16	138.01	-136.82	9.75
		207	14.77	137.11	-48.92	14.81	73.38	88.28	3.31	-646.97	2.30	-645.95	25.69
		165	12.30	77.47	-39.68	7.76	30.03	-57.51	-3.24	-623.53	-7.55	-619.23	51.47
78	85	151	10.13	115.39	-39.52	-1.70	77.56	-66.55	38.76	-194.09	6.70	-162.04	80.23
		193	8.77	87.62	-89.85	-16.61	14.37	87.37	139.00	-135.25	138.57	-134.81	10.94
		207	14.73	136.41	-46.87	14.80	74.74	86.60	4.07	-645.01	2.96	-643.90	26.79
		165	12.41	79.57	-41.19	7.63	30.74	-59.26	-2.52	-622.57	-7.04	-618.05	52.75
78	87	151	24.05	245.39	-90.23	0.08	155.08	-148.84	153.47	-510.31	-1.99	-354.84	281.11
		193	23.58	184.44	-243.01	-42.47	-16.09	213.32	513.99	-298.08	492.62	-276.72	129.98
		207	33.84	333.39	-143.32	38.78	151.29	231.62	-63.99	-1589.68	-79.08	-1574.59	150.97
		165	31.00	171.25	-124.87	19.39	27.00	-148.01	220.08	-1489.42	178.53	-1447.88	263.24
78	97	151	23.02	236.64	-86.60	-0.17	150.21	-143.06	143.20	-485.32	-0.71	-341.40	264.09
		193	22.34	177.93	-230.94	-40.50	-12.52	203.95	483.20	-285.89	464.41	-267.11	118.71
		207	32.47	318.67	-135.36	36.93	146.38	220.32	-55.49	-1518.31	-68.94	-1504.87	139.61
		165	29.58	164.92	-117.90	18.49	28.53	-141.32	197.85	-1425.17	160.22	-1387.54	244.25
78	102	151	10.13	115.39	-39.52	-1.70	77.56	-66.55	38.76	-194.09	6.70	-162.04	80.23
		193	8.77	87.62	-89.85	-16.61	14.37	87.37	139.00	-135.25	138.57	-134.81	10.94
		207	14.73	136.41	-46.87	14.80	74.74	86.60	4.07	-645.01	2.96	-643.90	26.79
		165	12.41	79.57	-41.19	7.63	30.74	-59.26	-2.52	-622.57	-7.04	-618.05	52.75
79	2	160	42.58	597.29	67.81	69.82	595.28	-32.56	912.22	-280.64	-217.07	848.65	267.93

Elem.	Cmb	Nodo	Von Mises	N max	N min	N 1	N 2	N 1-2	M max	M min	M 1	M 2	M 1-2
		202	35.77	440.49	-29.58	-24.65	435.56	47.90	1554.33	909.99	1327.15	1137.17	307.85
		193	53.99	775.30	-161.53	49.35	564.42	391.26	202.08	-1277.06	156.14	-1231.13	256.58
		151	56.27	624.94	-96.35	55.15	473.44	-293.81	396.83	-1298.42	231.28	-1132.87	503.23
79	21	160	12.71	185.38	18.87	19.07	185.18	-5.76	272.61	15.82	19.98	268.46	32.40
		202	11.04	146.81	-9.10	-7.06	144.77	17.72	338.74	220.69	244.88	314.56	47.65
		193	17.20	234.70	-46.94	14.01	173.75	115.98	43.35	-375.52	42.64	-374.80	17.26
		151	15.85	194.44	-22.96	16.23	155.25	-83.57	27.18	-374.82	10.55	-358.20	80.04
79	53	160	12.82	187.24	17.87	18.41	186.69	-9.58	275.52	16.19	21.14	270.56	35.50
		202	11.22	149.73	-8.54	-7.28	148.47	14.06	344.40	220.34	245.85	318.89	50.14
		193	17.14	235.20	-43.75	13.93	177.52	112.98	44.66	-371.15	43.76	-370.25	19.33
		151	16.10	198.11	-25.40	15.88	156.83	-86.73	29.09	-373.62	11.35	-355.89	82.64
79	85	160	12.89	188.44	17.18	18.01	187.61	-11.90	277.33	16.40	21.88	271.84	37.44
		202	11.33	151.60	-8.30	-7.42	150.71	11.83	347.88	220.11	246.48	321.51	51.71
		193	17.10	235.54	-41.86	13.88	179.80	111.15	45.48	-368.52	44.45	-367.49	20.64
		151	16.25	200.34	-26.89	15.67	157.78	-88.65	30.30	-372.94	11.84	-354.48	84.28
79	87	160	30.09	423.32	47.50	48.95	421.87	-23.30	644.87	-184.65	-141.80	602.01	183.61
		202	25.30	313.86	-20.81	-17.42	310.47	33.51	1079.31	639.31	917.63	800.98	212.13
		193	38.27	548.24	-113.23	34.75	400.26	275.66	139.94	-899.67	110.02	-869.75	173.81
		151	39.67	443.32	-67.79	38.86	336.67	-207.69	268.06	-914.80	155.77	-802.51	346.72
79	97	160	28.84	406.81	45.13	46.54	405.39	-22.59	618.17	-164.03	-124.90	579.04	170.51
		202	24.28	303.20	-19.83	-16.67	300.04	31.78	1017.74	609.63	862.01	765.36	198.25
		193	36.79	525.63	-107.63	33.17	384.84	263.32	133.29	-858.99	106.99	-832.69	159.41
		151	37.92	426.40	-64.68	37.11	324.62	-199.06	245.32	-873.81	142.16	-770.65	323.74
79	102	160	12.89	188.44	17.18	18.01	187.61	-11.90	277.33	16.40	21.88	271.84	37.44
		202	11.33	151.60	-8.30	-7.42	150.71	11.83	347.88	220.11	246.48	321.51	51.71
		193	17.10	235.54	-41.86	13.88	179.80	111.15	45.48	-368.52	44.45	-367.49	20.64
		151	16.25	200.34	-26.89	15.67	157.78	-88.65	30.30	-372.94	11.84	-354.48	84.28
80	2	159	153.35	1837.26	-1008.87	114.36	714.02	1391.12	966.17	-1502.61	-1054.02	517.58	951.96
		201	152.52	2062.44	-917.66	296.85	847.93	-1464.35	2415.69	907.98	2122.74	1200.94	-596.54
		202	86.13	1098.75	-384.16	-28.95	743.55	632.90	1423.55	-74.85	674.58	674.12	749.20
		160	68.38	1214.46	-237.21	163.58	813.68	-648.98	735.48	184.01	270.23	649.26	200.28
80	27	159	46.87	574.02	-315.44	32.49	226.08	434.07	365.39	-256.86	-100.08	208.61	270.14
		201	49.44	668.30	-293.87	89.90	284.53	-471.14	571.20	129.35	362.57	337.98	-220.58
		202	25.05	343.85	-107.74	-7.49	243.61	187.67	338.10	12.03	140.13	210.00	159.25
		160	23.78	388.97	-82.12	43.92	262.93	-208.54	207.15	79.67	83.68	203.14	-22.26
80	59	159	47.17	577.76	-320.98	32.15	224.62	438.94	361.37	-255.60	-102.04	207.81	266.77
		201	48.80	658.37	-292.12	88.57	277.68	-465.74	564.81	129.12	360.82	333.10	-217.40
		202	25.04	341.79	-112.67	-7.84	236.95	191.45	332.46	11.62	138.98	205.11	156.97
		160	23.57	385.35	-79.03	44.65	261.67	-205.28	207.30	77.35	82.28	202.37	-24.83
80	85	159	47.35	580.03	-324.35	31.94	223.73	441.91	358.89	-254.85	-103.28	207.31	264.68
		201	48.42	652.33	-291.06	87.76	273.52	-462.46	560.87	128.97	359.71	330.13	-215.44
		202	25.04	340.58	-115.72	-8.05	232.91	193.74	328.98	11.39	138.24	202.14	155.55
		160	23.44	383.16	-77.16	45.10	260.90	-203.30	207.45	75.85	81.40	201.90	-26.44
80	87	159	108.53	1302.18	-715.83	80.50	505.85	986.34	691.47	-1035.22	-716.45	372.70	669.93
		201	108.11	1461.94	-650.58	209.60	601.76	-1037.90	1680.63	627.13	1463.12	844.64	-426.42
		202	60.75	777.91	-271.53	-20.38	526.76	447.77	992.48	-47.97	468.15	476.36	520.21
		160	48.71	860.72	-168.42	115.06	577.24	-459.76	512.35	138.42	191.00	459.76	130.00
80	97	159	104.16	1251.45	-688.62	76.93	485.90	948.24	670.80	-967.18	-659.91	363.53	639.44
		201	103.90	1405.15	-625.33	200.79	579.03	-997.47	1587.39	587.30	1369.01	805.68	-413.17
		202	58.10	746.78	-260.26	-19.46	505.98	429.55	939.43	-40.19	442.37	456.86	489.76
		160	47.04	827.14	-162.15	109.75	555.24	-441.65	484.30	140.22	183.03	441.49	113.57
80	102	159	47.35	580.03	-324.35	31.94	223.73	441.91	358.89	-254.85	-103.28	207.31	264.68
		201	48.42	652.33	-291.06	87.76	273.52	-462.46	560.87	128.97	359.71	330.13	-215.44
		202	25.04	340.58	-115.72	-8.05	232.91	193.74	328.98	11.39	138.24	202.14	155.55
		160	23.44	383.16	-77.16	45.10	260.90	-203.30	207.45	75.85	81.40	201.90	-26.44
81	2	212	79.43	1138.55	-90.97	212.25	835.32	529.98	1598.23	-58.23	-35.63	1575.63	192.15
		45	98.58	1120.30	-1013.86	-686.29	792.73	-769.28	971.34	521.33	880.72	611.95	180.47
		43	204.12	3388.60	-154.61	634.24	2599.74	1474.04	2100.97	-88.24	106.38	1906.36	623.03
		211	67.21	49.04	-1212.39	-151.67	-1011.68	-461.41	56.22	-325.56	-10.10	-259.24	-144.64
81	34	212	21.54	299.96	-38.80	56.73	204.42	152.44	444.98	-5.00	5.48	434.51	67.85
		45	31.05	368.62	-297.01	-191.23	262.84	-243.36	249.34	41.04	247.50	42.88	19.49
		43	60.17	963.29	-57.99	173.30	732.00	427.46	736.86	24.32	101.09	660.10	220.92
		211	19.16	19.27	-329.78	-39.58	-270.93	-130.69	15.95	-139.05	-25.79	-97.31	-68.76
81	66	212	21.48	300.54	-38.90	58.27	203.37	153.44	441.20	-5.51	4.63	431.06	66.53
		45	30.88	362.89	-297.32	-190.77	256.34	-242.88	248.73	35.74	246.54	37.93	21.51
		43	59.67	954.61	-58.32	171.29	725.01	424.10	732.53	27.69	104.42	655.80	219.53
		211	19.43	20.34	-333.32	-40.51	-272.47	-133.48	18.86	-141.15	-22.18	-100.11	-69.88
81	85	212	21.45	300.91	-38.97	59.21	202.73	154.05	438.90	-5.82	4.11	428.97	65.70
		45	30.78	359.41	-297.51	-190.49	252.39	-242.59	248.38	32.49	245.95	34.92	22.75
		43	59.36	949.34	-58.52	170.06	720.76	422.05	729.88	29.77	106.47	653.18	218.67
		211	19.60	20.99	-335.47	-41.07	-273.41	-135.17	20.69	-142.47	-19.98	-101.81	-70.58
81	87	212	55.80	799.06	-65.75	149.40	583.91	373.86	1123.94	-39.53	-23.20	1107.62	136.86
		45	69.82	794.78	-715.56	-482.92	562.14	-545.20	677.40	355.17	619.94	412.63	123.34
		43	144.00	2385.64	-110.88	445.50	1829.26	1038.96	1497.86	-54.75	85.11	1358.00	444.51
		211	47.41	35.48	-852.97	-106.59	-710.91	-325.63	40.07	-235.86	-9.39	-186.40	-105.84

Elem.	Cmb	Nodo	Von Mises	N max	N min	N 1	N 2	N 1-2	M max	M min	M 1	M 2	M 1-2
81	97	212	53.16	760.21	-64.43	142.56	553.23	357.56	1071.52	-36.48	-20.38	1055.43	132.57
		45	67.05	764.46	-684.66	-460.67	540.47	-523.85	642.73	327.36	593.36	376.74	114.60
		43	137.71	2276.96	-107.78	424.20	1744.98	992.79	1447.75	-44.16	92.10	1311.49	429.79
		211	45.35	34.79	-813.59	-101.55	-677.26	-311.57	39.04	-231.37	-11.17	-181.16	-105.15
81	102	212	21.45	300.91	-38.97	59.21	202.73	154.05	438.90	-5.82	4.11	428.97	65.70
		45	30.78	359.41	-297.51	-190.49	252.39	-242.59	248.38	32.49	245.95	34.92	22.75
		43	59.36	949.34	-58.52	170.06	720.76	422.05	729.88	29.77	106.47	653.18	218.67
		211	19.60	20.99	-335.47	-41.07	-273.41	-135.17	20.69	-142.47	-19.98	-101.81	-70.58
82	2	214	15.41	289.55	34.85	93.28	231.12	107.09	146.71	-167.29	142.86	-163.45	34.54
		47	84.70	1123.90	-74.96	22.48	1026.46	-327.61	226.84	-1682.76	-94.28	-1361.64	714.20
		45	45.40	507.22	-69.69	-23.26	460.79	156.93	1624.15	621.29	625.52	1619.91	-65.04
		212	55.30	812.55	-156.18	-128.64	785.02	-160.99	658.92	-216.33	-199.97	642.56	118.53
82	30	214	4.24	46.44	-12.49	24.36	9.60	28.53	52.87	-134.64	50.98	-132.76	18.69
		47	26.83	333.23	-20.29	15.04	297.90	-106.02	18.78	-633.80	-36.63	-578.39	181.91
		45	10.36	81.08	-23.33	-15.50	73.25	27.51	491.83	224.57	225.47	490.93	15.48
		212	15.27	243.71	-44.00	-36.45	236.16	-46.01	97.42	-66.08	-64.62	95.97	15.37
82	62	214	4.37	45.10	-15.12	24.19	5.79	28.67	51.75	-139.77	50.27	-138.30	16.73
		47	26.68	329.33	-20.62	14.82	293.89	-105.57	18.12	-636.87	-35.70	-583.05	179.88
		45	10.10	77.83	-22.85	-14.50	69.48	27.78	486.75	224.08	224.76	486.07	13.34
		212	15.01	240.29	-43.11	-35.40	232.58	-46.09	91.32	-66.58	-65.48	90.22	13.14
82	85	214	4.45	44.34	-16.77	24.10	3.47	28.76	51.09	-142.92	49.85	-141.67	15.50
		47	26.59	326.96	-20.82	14.69	291.45	-105.30	17.71	-638.73	-35.13	-585.89	178.60
		45	9.94	75.88	-22.59	-13.89	67.18	27.95	483.67	223.76	224.32	483.11	12.02
		212	14.85	238.21	-42.57	-34.77	230.41	-46.14	87.62	-66.90	-66.00	86.72	11.76
82	87	214	10.66	197.41	22.53	65.40	154.54	75.23	104.60	-130.56	101.89	-127.85	25.09
		47	60.01	792.80	-52.69	16.95	723.16	-232.44	152.11	-1205.52	-67.54	-985.88	499.95
		45	31.59	348.26	-49.47	-17.36	316.15	108.35	1146.85	444.43	446.93	1144.35	-41.76
		212	38.84	573.46	-109.80	-90.40	554.06	-113.48	450.89	-153.07	-142.12	439.94	80.59
82	97	214	9.99	182.28	19.43	62.15	139.55	71.64	101.17	-137.32	98.48	-134.63	25.18
		47	57.66	758.22	-50.21	17.27	690.74	-223.61	140.06	-1170.61	-63.51	-967.04	474.74
		45	29.78	323.83	-47.62	-17.54	293.74	101.34	1098.29	432.26	434.19	1096.35	-35.85
		212	36.99	548.69	-104.64	-86.11	530.17	-108.44	417.98	-146.76	-136.89	408.11	74.00
82	102	214	4.45	44.34	-16.77	24.10	3.47	28.76	51.09	-142.92	49.85	-141.67	15.50
		47	26.59	326.96	-20.82	14.69	291.45	-105.30	17.71	-638.73	-35.13	-585.89	178.60
		45	9.94	75.88	-22.59	-13.89	67.18	27.95	483.67	223.76	224.32	483.11	12.02
		212	14.85	238.21	-42.57	-34.77	230.41	-46.14	87.62	-66.90	-66.00	86.72	11.76
83	2	216	19.85	-7.48	-103.82	-8.65	-102.65	10.54	47.73	-965.70	40.14	-958.11	87.40
		55	72.78	775.50	41.98	97.05	720.43	-193.29	158.21	-2263.88	44.17	-2149.85	513.03
		47	21.69	78.31	-211.61	-94.18	-39.12	-142.32	614.12	-48.08	159.15	406.90	307.06
		214	47.50	691.87	-9.60	-9.27	691.54	-15.29	-5.65	-864.10	-26.43	-843.32	131.95
83	26	216	11.39	-5.27	-101.81	-5.28	-101.80	-0.57	21.31	-419.74	18.81	-417.24	33.10
		55	22.31	201.07	12.08	35.03	178.12	-61.74	29.99	-848.21	13.47	-831.69	119.31
		47	9.37	4.22	-125.85	-33.09	-88.54	-58.83	182.79	-53.50	69.80	59.49	118.03
		214	14.74	180.25	-0.06	-2.14e-03	180.19	-3.33	-12.36	-388.56	-13.49	-387.43	20.59
83	58	216	11.58	-5.39	-104.67	-5.39	-104.67	-0.28	20.05	-423.58	17.80	-421.33	31.53
		55	22.21	198.54	11.91	34.97	175.48	-61.42	28.40	-851.25	12.33	-835.18	117.81
		47	9.33	3.12	-127.28	-33.00	-91.16	-58.36	179.94	-53.16	70.79	55.99	116.31
		214	14.66	177.40	-5.27e-03	0.04	177.35	-2.89	-11.68	-392.47	-12.61	-391.54	18.80
83	85	216	11.70	-5.45	-106.41	-5.45	-106.41	-0.11	19.28	-425.92	17.18	-423.82	30.52
		55	22.14	197.00	11.80	34.93	173.87	-61.23	27.44	-853.09	11.65	-837.30	116.85
		47	9.31	2.47	-128.16	-32.95	-92.75	-58.07	178.18	-52.92	71.40	53.85	115.22
		214	14.62	175.66	0.03	0.07	175.62	-2.62	-11.25	-394.85	-12.07	-394.04	17.66
83	87	216	14.78	-5.85	-83.26	-6.49	-82.62	7.01	34.37	-700.57	29.05	-695.25	62.33
		55	51.47	543.10	29.73	69.36	503.47	-137.02	108.35	-1622.22	31.00	-1544.87	357.60
		47	15.66	50.81	-156.44	-67.18	-38.44	-102.63	431.67	-37.61	115.62	278.44	220.07
		214	33.61	484.67	-6.40	-6.17	484.44	-10.54	-5.83	-628.15	-19.23	-614.75	90.32
83	97	216	14.90	-6.11	-89.40	-6.59	-88.93	6.29	33.61	-688.87	28.47	-683.73	60.73
		55	49.36	515.61	28.53	67.21	476.93	-131.70	102.59	-1575.62	31.53	-1504.56	337.96
		47	15.35	44.56	-156.83	-64.98	-47.29	-100.31	412.53	-38.60	115.58	258.35	213.97
		214	32.25	460.24	-5.75	-5.54	460.03	-9.85	-7.32	-618.81	-18.91	-607.21	83.41
83	102	216	11.70	-5.45	-106.41	-5.45	-106.41	-0.11	19.28	-425.92	17.18	-423.82	30.52
		55	22.14	197.00	11.80	34.93	173.87	-61.23	27.44	-853.09	11.65	-837.30	116.85
		47	9.31	2.47	-128.16	-32.95	-92.75	-58.07	178.18	-52.92	71.40	53.85	115.22
		214	14.62	175.66	0.03	0.07	175.62	-2.62	-11.25	-394.85	-12.07	-394.04	17.66
84	2	218	43.29	-38.60	-383.62	-38.71	-383.51	-6.01	52.68	-1651.10	45.64	-1644.07	109.24
		63	62.77	445.88	31.98	102.97	374.89	-156.02	88.73	-2822.06	32.86	-2766.19	399.40
		55	27.98	-4.28	-463.19	-99.06	-368.41	-185.77	377.52	-607.02	200.30	-429.79	378.26
		216	43.82	399.96	33.37	33.66	399.68	10.20	-29.51	-1662.28	-33.66	-1658.14	82.14
84	26	218	19.15	-13.09	-191.38	-13.27	-191.19	-5.69	20.64	-653.44	18.48	-651.28	38.03
		63	18.28	91.75	-3.71	34.64	53.40	-46.80	19.87	-1024.24	13.81	-1018.18	79.33
		55	13.26	-7.53	-217.46	-32.52	-192.47	-67.97	122.30	-291.75	74.49	-243.94	132.32
		216	13.02	70.53	11.19	11.54	70.18	4.58	-13.80	-658.92	-13.84	-658.88	5.14
84	58	218	19.27	-13.19	-192.93	-13.34	-192.77	-5.33	19.57	-656.78	17.59	-654.80	36.58
		63	18.22	90.32	-4.02	34.56	51.74	-46.38	18.66	-1027.12	12.82	-1021.28	77.95
		55	13.40	-7.79	-218.63	-32.33	-194.09	-67.62	122.10	-293.41	75.68	-246.99	130.89

Elem.	Cmb	Nodo	Von Mises	N max	N min	N 1	N 2	N 1-2	M max	M min	M 1	M 2	M 1-2
		216	13.00	69.06	11.33	11.74	68.65	4.88	-12.72	-662.37	-12.74	-662.35	3.69
84	85	218	19.34	-13.24	-193.87	-13.39	-193.73	-5.11	18.93	-658.82	17.04	-656.94	35.66
		63	18.18	89.45	-4.21	34.51	50.73	-46.12	17.93	-1028.87	12.23	-1023.17	77.07
		55	13.49	-7.94	-219.34	-32.22	-195.07	-67.40	121.96	-294.41	76.40	-248.86	129.98
		216	12.99	68.17	11.41	11.86	67.72	5.06	-12.06	-664.47	-12.07	-664.46	2.76
84	87	218	31.44	-27.50	-281.59	-27.59	-281.51	-4.69	37.63	-1188.57	32.70	-1183.64	77.58
		63	44.27	308.32	21.62	73.25	256.69	-110.16	60.99	-2018.01	23.53	-1980.55	276.54
		55	20.05	-4.32	-337.63	-70.33	-271.62	-132.84	267.42	-443.42	143.72	-319.71	269.50
		216	30.94	275.70	23.80	24.02	275.48	7.47	-21.46	-1196.61	-24.05	-1194.02	55.13
84	97	218	30.94	-26.57	-279.96	-26.66	-279.87	-4.92	36.50	-1159.90	31.76	-1155.17	75.15
		63	42.34	288.92	19.70	70.65	237.97	-105.46	58.83	-1956.10	24.84	-1922.11	259.51
		55	19.48	-5.33	-333.54	-67.71	-271.15	-128.77	258.66	-438.33	141.71	-321.38	260.45
		216	29.62	257.44	23.01	23.24	257.20	7.42	-21.13	-1167.70	-23.28	-1165.55	49.64
84	102	218	19.34	-13.24	-193.87	-13.39	-193.73	-5.11	18.93	-658.82	17.04	-656.94	35.66
		63	18.18	89.45	-4.21	34.51	50.73	-46.12	17.93	-1028.87	12.23	-1023.17	77.07
		55	13.49	-7.94	-219.34	-32.22	-195.07	-67.40	121.96	-294.41	76.40	-248.86	129.98
		216	12.99	68.17	11.41	11.86	67.72	5.06	-12.06	-664.47	-12.07	-664.46	2.76
85	2	220	65.13	-42.41	-634.39	-42.55	-634.26	-8.87	53.82	-2277.86	47.42	-2271.46	121.94
		71	53.52	209.11	-67.79	96.66	44.66	-135.98	64.41	-3321.98	33.18	-3290.75	323.71
		63	49.19	-37.63	-693.12	-92.54	-638.20	-181.61	325.66	-1277.81	221.83	-1173.99	394.59
		218	37.75	92.23	37.67	41.42	88.48	13.81	-38.05	-2306.99	-39.25	-2305.79	52.08
85	49	220	26.06	-13.33	-267.06	-13.48	-266.90	-6.30	17.44	-863.71	15.77	-862.04	38.32
		71	21.71	42.95	-75.58	30.37	-63.00	-36.51	15.52	-1173.03	13.53	-1171.05	48.50
		63	21.41	-13.10	-289.36	-28.08	-274.39	-62.54	105.18	-539.57	78.68	-513.08	127.99
		218	15.41	13.68	-41.81	12.97	-41.11	6.21	-12.48	-874.58	-12.52	-874.53	-6.14
85	81	220	25.98	-13.31	-266.08	-13.46	-265.93	-6.13	17.83	-861.26	16.20	-859.62	37.86
		71	21.63	42.91	-74.61	30.35	-62.05	-36.31	15.95	-1170.77	14.00	-1168.82	48.05
		63	21.33	-13.05	-288.42	-28.03	-273.44	-62.45	105.21	-537.26	78.81	-510.86	127.54
		218	15.33	13.76	-40.84	13.05	-40.12	6.20	-12.36	-872.18	-12.41	-872.13	-6.62
85	85	220	25.93	-13.30	-265.47	-13.44	-265.32	-6.02	18.07	-859.74	16.46	-858.13	37.57
		71	21.59	42.89	-74.02	30.34	-61.46	-36.20	16.21	-1169.37	14.28	-1167.44	47.76
		63	21.28	-13.02	-287.83	-28.01	-272.85	-62.40	105.23	-535.83	78.89	-509.49	127.24
		218	15.28	13.82	-40.23	13.10	-39.51	6.19	-12.29	-870.70	-12.34	-870.65	-6.92
85	87	220	46.88	-30.05	-458.32	-30.16	-458.22	-6.72	38.28	-1633.19	33.81	-1628.73	86.30
		71	37.61	143.35	-53.29	68.48	21.58	-95.48	44.64	-2370.11	24.02	-2349.49	222.18
		63	35.63	-26.93	-500.34	-65.43	-461.85	-129.39	230.91	-923.10	158.40	-850.59	280.03
		218	26.59	57.32	25.76	29.36	53.72	10.03	-27.11	-1653.98	-27.81	-1653.28	33.80
85	97	220	45.74	-28.87	-448.82	-28.98	-448.70	-6.87	36.96	-1587.55	32.68	-1583.27	83.25
		71	35.84	133.33	-56.52	65.79	11.02	-90.89	43.95	-2292.30	25.54	-2273.90	206.54
		63	34.99	-26.12	-489.60	-62.72	-453.00	-124.99	223.93	-903.45	155.31	-834.84	269.53
		218	25.40	47.90	23.26	28.22	42.94	9.87	-26.18	-1607.63	-26.71	-1607.09	29.10
85	102	220	25.93	-13.30	-265.47	-13.44	-265.32	-6.02	18.07	-859.74	16.46	-858.13	37.57
		71	21.59	42.89	-74.02	30.34	-61.46	-36.20	16.21	-1169.37	14.28	-1167.44	47.76
		63	21.28	-13.02	-287.83	-28.01	-272.85	-62.40	105.23	-535.83	78.89	-509.49	127.24
		218	15.28	13.82	-40.23	13.10	-39.51	6.19	-12.29	-870.70	-12.34	-870.65	-6.92
86	2	222	84.88	-39.57	-858.51	-39.68	-858.40	-9.42	49.35	-2844.58	43.30	-2838.52	132.25
		79	71.89	124.26	-295.51	87.74	-258.98	-118.31	64.01	-3763.70	45.96	-3745.64	262.24
		71	71.06	-48.62	-906.02	-83.26	-871.37	-168.83	295.13	-1927.26	220.37	-1852.50	400.70
		220	54.22	40.24	-208.47	39.43	-207.66	14.13	-36.80	-2872.29	-37.16	-2871.94	31.69
86	33	222	31.57	-11.46	-325.99	-11.63	-325.83	-7.25	15.56	-1031.98	13.97	-1030.39	40.77
		79	28.13	29.60	-165.67	25.48	-161.54	-28.07	18.45	-1279.94	17.92	-1279.41	26.20
		71	27.88	-13.85	-344.44	-23.15	-335.14	-54.66	93.11	-757.12	75.27	-739.28	121.87
		220	22.77	11.16	-139.65	10.88	-139.37	6.48	-12.09	-1041.54	-12.21	-1041.42	-11.03
86	65	222	31.43	-11.38	-323.75	-11.52	-323.61	-6.63	15.83	-1029.75	14.36	-1028.28	39.08
		79	28.03	29.35	-164.14	25.39	-160.18	-27.39	18.83	-1278.05	18.36	-1277.58	24.63
		71	27.79	-13.63	-343.11	-23.00	-333.74	-54.76	93.57	-754.96	76.14	-737.54	120.35
		220	22.64	11.47	-137.39	11.20	-137.12	6.40	-11.23	-1039.56	-11.38	-1039.40	-12.66
86	85	222	31.35	-11.34	-322.39	-11.46	-322.26	-6.25	15.99	-1028.36	14.60	-1026.98	38.04
		79	27.97	29.20	-163.22	25.34	-159.35	-26.98	19.07	-1276.89	18.64	-1276.45	23.65
		71	27.74	-13.50	-342.30	-22.91	-332.89	-54.83	93.84	-753.63	76.67	-736.46	119.40
		220	22.57	11.66	-136.01	11.39	-135.74	6.35	-10.70	-1038.33	-10.88	-1038.15	-13.67
86	87	222	60.76	-27.90	-615.32	-27.98	-615.24	-7.11	35.02	-2033.49	30.81	-2029.28	93.24
		79	51.65	86.16	-218.19	61.87	-193.90	-82.47	44.80	-2678.97	33.12	-2667.29	177.98
		71	51.07	-34.25	-649.61	-58.56	-625.30	-119.86	209.08	-1385.14	157.13	-1333.20	283.05
		220	39.16	28.38	-157.11	27.81	-156.54	10.27	-26.04	-2053.23	-26.22	-2053.05	19.30
86	97	222	58.98	-26.66	-597.90	-26.75	-597.81	-7.25	33.74	-1970.89	29.73	-1966.88	89.55
		79	50.33	81.04	-218.21	59.15	-196.32	-77.92	44.53	-2585.03	34.33	-2574.83	163.45
		71	49.77	-32.71	-631.45	-55.84	-608.33	-115.38	202.80	-1349.16	153.88	-1300.24	271.16
		220	38.33	27.13	-160.01	26.59	-159.46	10.11	-24.97	-1989.92	-25.09	-1989.80	15.12
86	102	222	31.35	-11.34	-322.39	-11.46	-322.26	-6.25	15.99	-1028.36	14.60	-1026.98	38.04
		79	27.97	29.20	-163.22	25.34	-159.35	-26.98	19.07	-1276.89	18.64	-1276.45	23.65
		71	27.74	-13.50	-342.30	-22.91	-332.89	-54.83	93.84	-753.63	76.67	-736.46	119.40
		220	22.57	11.66	-136.01	11.39	-135.74	6.35	-10.70	-1038.33	-10.88	-1038.15	-13.67
87	2	224	102.36	-35.21	-1055.37	-35.30	-1055.28	-9.44	41.69	-3350.27	35.71	-3344.29	142.30
		51	91.32	94.40	-549.18	78.16	-532.93	-100.94	75.96	-4146.38	66.35	-4136.78	201.13

Elem.	Cmb	Nodo	Von Mises	N max	N min	N 1	N 2	N 1-2	M max	M min	M 1	M 2	M 1-2
		79	90.45	-50.34	-1096.94	-73.37	-1073.90	-153.55	264.47	-2529.14	203.48	-2468.14	408.26
		222	75.26	35.60	-480.22	35.22	-479.84	13.98	-30.50	-3372.59	-30.57	-3372.52	14.49
87	33	224	35.82	-9.12	-369.78	-9.27	-369.62	-7.39	12.99	-1166.93	11.62	-1165.56	40.20
		51	33.33	21.60	-246.91	20.26	-245.57	-18.90	23.83	-1353.93	23.81	-1353.92	4.81
		79	33.13	-11.95	-386.35	-17.76	-380.53	-46.29	83.12	-945.28	70.87	-933.03	111.54
		222	28.94	8.65	-223.95	8.46	-223.76	6.64	-9.14	-1174.40	-9.36	-1174.17	-16.07
87	65	224	35.64	-8.99	-366.43	-9.12	-366.30	-6.73	13.18	-1165.22	11.92	-1163.96	38.57
		51	33.20	21.42	-244.62	20.17	-243.37	-18.20	24.13	-1352.48	24.12	-1352.47	3.30
		79	33.00	-11.77	-384.17	-17.65	-378.29	-46.43	83.33	-943.50	71.40	-931.58	109.99
		222	28.76	8.98	-220.59	8.79	-220.40	6.47	-8.57	-1172.84	-8.84	-1172.57	-17.74
87	85	224	35.53	-8.91	-364.40	-9.02	-364.28	-6.33	13.30	-1164.14	12.10	-1162.95	37.56
		51	33.11	21.32	-243.22	20.12	-242.02	-17.77	24.32	-1351.56	24.32	-1351.55	2.37
		79	32.93	-11.66	-382.85	-17.58	-376.92	-46.52	83.45	-942.38	71.73	-930.66	109.04
		222	28.65	9.17	-218.54	8.99	-218.36	6.37	-8.23	-1171.86	-8.53	-1171.56	-18.77
87	87	224	72.98	-24.66	-752.16	-24.73	-752.09	-7.14	29.55	-2388.72	25.42	-2384.58	99.87
		51	65.29	65.50	-398.27	54.79	-387.56	-69.66	53.52	-2944.10	47.48	-2938.06	134.40
		79	64.69	-35.14	-782.32	-51.26	-766.19	-108.57	187.23	-1811.53	145.22	-1769.52	286.71
		222	53.99	24.95	-349.28	24.68	-349.01	10.17	-21.49	-2404.58	-21.52	-2404.56	7.15
87	97	224	70.54	-23.42	-726.81	-23.49	-726.74	-7.29	28.44	-2309.16	24.54	-2305.26	95.45
		51	63.30	61.62	-391.48	52.06	-381.92	-65.13	53.13	-2833.91	48.02	-2828.80	121.31
		79	62.74	-33.24	-756.46	-48.54	-741.16	-104.08	181.69	-1758.71	142.48	-1719.51	273.02
		222	52.51	23.71	-344.26	23.44	-343.99	10.03	-20.53	-2324.42	-20.53	-2324.41	3.49
87	102	224	35.53	-8.91	-364.40	-9.02	-364.28	-6.33	13.30	-1164.14	12.10	-1162.95	37.56
		51	33.11	21.32	-243.22	20.12	-242.02	-17.77	24.32	-1351.56	24.32	-1351.55	2.37
		79	32.93	-11.66	-382.85	-17.58	-376.92	-46.52	83.45	-942.38	71.73	-930.66	109.04
		222	28.65	9.17	-218.54	8.99	-218.36	6.37	-8.23	-1171.86	-8.53	-1171.56	-18.77
88	2	226	117.54	-30.24	-1224.29	-30.32	-1224.22	-9.35	32.43	-3795.58	26.34	-3789.49	152.65
		61	108.37	76.47	-784.77	68.23	-776.52	-83.87	93.63	-4471.20	89.91	-4467.48	130.35
		51	107.41	-47.76	-1263.00	-63.45	-1247.32	-137.17	231.20	-3075.03	176.54	-3020.36	421.60
		224	94.01	30.65	-724.83	30.40	-724.58	13.77	-21.47	-3811.11	-21.48	-3811.10	-4.11
88	33	226	38.82	-6.66	-397.84	-6.80	-397.70	-7.42	9.58	-1270.15	8.42	-1268.99	38.54
		61	37.26	15.22	-314.06	14.94	-313.78	-9.59	29.92	-1396.11	29.76	-1395.95	-15.22
		51	37.11	-8.82	-413.53	-12.30	-410.04	-37.41	73.46	-1103.45	65.04	-1095.03	99.18
		224	33.89	6.07	-293.28	5.92	-293.12	6.81	-5.80	-1275.43	-6.13	-1275.09	-20.52
88	65	226	38.58	-6.48	-393.61	-6.60	-393.49	-6.76	10.04	-1267.97	8.95	-1266.88	37.18
		61	37.09	15.10	-311.09	14.86	-310.85	-8.89	30.52	-1394.26	30.33	-1394.07	-16.46
		51	36.94	-8.67	-410.64	-12.23	-407.08	-37.65	73.47	-1101.27	65.27	-1093.08	97.79
		224	33.65	6.39	-289.03	6.25	-288.88	6.54	-5.52	-1273.29	-5.90	-1272.91	-22.02
88	85	226	38.44	-6.37	-391.03	-6.48	-390.93	-6.37	10.31	-1266.61	9.28	-1265.57	36.36
		61	36.98	15.04	-309.29	14.82	-309.07	-8.47	30.89	-1393.11	30.68	-1392.90	-17.21
		51	36.84	-8.58	-408.88	-12.18	-405.28	-37.79	73.48	-1099.92	65.41	-1091.86	96.93
		224	33.51	6.59	-286.44	6.45	-286.30	6.38	-5.34	-1271.97	-5.76	-1271.55	-22.94
88	87	226	83.48	-21.01	-868.33	-21.07	-868.27	-7.09	22.98	-2699.25	18.80	-2695.07	106.61
		61	77.17	52.78	-564.21	47.46	-558.89	-57.04	66.25	-3166.25	64.03	-3164.04	84.61
		51	76.52	-33.00	-896.50	-43.92	-885.58	-96.48	163.62	-2196.37	126.41	-2159.16	293.99
		224	67.14	21.31	-521.41	21.12	-521.22	10.03	-15.07	-2710.29	-15.09	-2710.28	-5.80
88	97	226	80.40	-19.79	-835.01	-19.85	-834.94	-7.25	22.11	-2602.66	18.19	-2598.74	101.35
		61	74.53	49.38	-549.93	44.74	-545.30	-52.50	65.55	-3039.60	63.79	-3037.84	73.81
		51	73.92	-30.89	-862.79	-41.20	-852.49	-92.01	159.00	-2126.55	124.70	-2092.25	277.91
		224	65.01	20.08	-508.47	19.89	-508.28	9.90	-14.34	-2613.28	-14.37	-2613.25	-8.75
88	102	226	38.44	-6.37	-391.03	-6.48	-390.93	-6.37	10.31	-1266.61	9.28	-1265.57	36.36
		61	36.98	15.04	-309.29	14.82	-309.07	-8.47	30.89	-1393.11	30.68	-1392.90	-17.21
		51	36.84	-8.58	-408.88	-12.18	-405.28	-37.79	73.48	-1099.92	65.41	-1091.86	96.93
		224	33.51	6.59	-286.44	6.45	-286.30	6.38	-5.34	-1271.97	-5.76	-1271.55	-22.94
89	2	228	130.49	-24.02	-1365.00	-24.09	-1364.93	-9.76	22.63	-4184.67	16.31	-4178.35	162.93
		73	123.14	62.10	-995.32	57.92	-991.14	-66.35	112.60	-4743.12	112.24	-4742.75	42.21
		61	122.00	-42.52	-1403.08	-53.40	-1392.20	-121.17	196.76	-3561.93	144.23	-3509.40	441.23
		226	110.42	24.90	-940.93	24.70	-940.73	13.87	-11.02	-4190.09	-11.20	-4189.91	-27.47
89	33	228	40.50	-4.15	-409.71	-4.29	-409.57	-7.37	6.14	-1339.99	5.18	-1339.03	35.93
		73	39.88	9.55	-365.77	9.55	-365.77	-0.15	36.98	-1405.15	36.17	-1404.34	-34.33
		61	39.79	-4.91	-425.33	-6.81	-423.43	-28.21	63.53	-1229.33	57.92	-1223.72	85.01
		226	37.53	3.50	-346.83	3.36	-346.70	6.97	-2.84	-1343.08	-3.29	-1342.62	-24.77
89	65	228	40.23	-3.93	-404.88	-4.05	-404.76	-6.75	6.80	-1337.15	5.88	-1336.24	35.07
		73	39.68	9.49	-362.35	9.49	-362.35	0.49	37.80	-1402.76	36.94	-1401.90	-35.11
		61	39.59	-4.82	-421.95	-6.78	-419.99	-28.56	63.77	-1226.71	58.28	-1221.22	83.98
		226	37.26	3.80	-342.00	3.67	-341.87	6.60	-2.48	-1340.27	-2.98	-1339.77	-25.87
89	85	228	40.06	-3.80	-401.94	-3.90	-401.84	-6.38	7.20	-1335.41	6.31	-1334.52	34.55
		73	39.56	9.46	-360.26	9.46	-360.26	0.88	38.29	-1401.28	37.41	-1400.40	-35.59
		61	39.46	-4.76	-419.90	-6.76	-417.90	-28.77	63.92	-1225.10	58.50	-1219.69	83.35
		226	37.09	3.98	-339.06	3.86	-338.94	6.38	-2.27	-1338.54	-2.80	-1338.01	-26.55
89	87	228	92.33	-16.52	-963.59	-16.58	-963.53	-7.36	16.02	-2967.81	11.72	-2963.51	113.22
		73	87.37	42.46	-711.39	39.87	-708.80	-44.12	79.97	-3348.71	79.81	-3348.55	23.40
		61	86.60	-29.00	-991.35	-36.50	-983.86	-84.61	139.23	-2537.50	103.95	-2502.23	305.27
		226	78.56	17.13	-672.49	16.98	-672.35	10.10	-7.68	-2971.84	-7.84	-2971.68	-21.85
89	97	228	88.58	-15.39	-922.23	-15.46	-922.17	-7.49	15.41	-2853.77	11.41	-2849.77	107.04

Elem.	Cmb	Nodo	Von Mises	N max	N min	N 1	N 2	N 1-2	M max	M min	M 1	M 2	M 1-2
		73	84.05	39.34	-689.37	37.18	-687.22	-39.59	79.00	-3205.02	78.92	-3204.94	16.20
		61	83.34	-26.77	-949.66	-33.78	-942.66	-80.09	135.60	-2450.57	103.54	-2418.50	286.19
		226	75.78	15.96	-651.64	15.81	-651.49	9.96	-7.24	-2857.80	-7.44	-2857.60	-23.69
89	102	228	40.06	-3.80	-401.94	-3.90	-401.84	-6.38	7.20	-1335.41	6.31	-1334.52	34.55
		73	39.56	9.46	-360.26	9.46	-360.26	0.88	38.29	-1401.28	37.41	-1400.40	-35.59
		61	39.46	-4.76	-419.90	-6.76	-417.90	-28.77	63.92	-1225.10	58.50	-1219.69	83.35
		226	37.09	3.98	-339.06	3.86	-338.94	6.38	-2.27	-1338.54	-2.80	-1338.01	-26.55
90	2	230	141.33	-14.51	-1473.26	-14.63	-1473.14	-13.61	14.09	-4535.92	7.44	-4529.26	173.87
		83	136.03	48.06	-1183.90	46.64	-1182.48	-41.77	128.13	-4975.76	127.09	-4974.73	-72.72
		73	134.33	-33.84	-1516.46	-41.91	-1508.39	-109.05	166.36	-3991.53	113.72	-3938.89	464.87
		228	124.57	16.52	-1129.81	16.28	-1129.58	16.28	-0.52	-4513.27	-1.29	-4512.50	-58.96
90	33	230	40.84	-1.62	-405.07	-1.75	-404.94	-7.25	2.84	-1375.44	2.07	-1374.67	32.67
		83	41.18	4.32	-401.55	4.11	-401.34	9.36	44.94	-1380.30	43.01	-1378.36	-52.46
		73	41.15	-0.46	-421.33	-1.31	-420.49	-18.84	53.86	-1321.73	50.37	-1318.24	69.25
		228	39.85	0.95	-384.12	0.82	-383.99	7.11	-0.06	-1376.44	-0.67	-1375.83	-28.86
90	65	230	40.55	-1.37	-400.00	-1.48	-399.89	-6.71	3.59	-1372.28	2.82	-1371.52	32.39
		83	40.96	4.32	-397.94	4.08	-397.70	9.91	45.80	-1377.61	43.85	-1375.65	-52.72
		73	40.93	-0.43	-417.74	-1.33	-416.85	-19.28	54.46	-1318.96	51.02	-1315.51	68.73
		228	39.56	1.22	-379.05	1.10	-378.94	6.66	0.53	-1373.29	-0.10	-1372.66	-29.40
90	85	230	40.38	-1.21	-396.92	-1.31	-396.82	-6.39	4.04	-1370.35	3.28	-1369.59	32.22
		83	40.83	4.32	-395.75	4.06	-395.49	10.24	46.32	-1375.96	44.35	-1373.99	-52.88
		73	40.80	-0.41	-415.56	-1.33	-414.63	-19.55	54.83	-1317.26	51.41	-1313.84	68.42
		228	39.39	1.38	-375.97	1.27	-375.86	6.39	0.89	-1371.37	0.24	-1370.72	-29.73
90	87	230	99.60	-9.83	-1035.10	-9.93	-1035.00	-9.93	9.90	-3206.62	5.40	-3202.12	120.21
		83	96.12	32.44	-841.85	31.64	-841.05	-26.48	91.50	-3500.54	90.64	-3499.68	-55.53
		73	94.99	-22.65	-1066.34	-28.12	-1060.88	-75.30	117.54	-2835.98	82.67	-2801.11	319.03
		228	88.30	11.19	-803.34	11.03	-803.17	11.70	-0.24	-3191.69	-0.83	-3191.10	-43.27
90	97	230	95.17	-9.02	-985.91	-9.12	-985.81	-9.81	9.45	-3073.47	5.31	-3069.32	113.01
		83	92.11	29.63	-811.67	29.03	-811.07	-22.43	90.57	-3338.29	89.62	-3337.34	-57.21
		73	91.09	-20.48	-1016.54	-25.49	-1011.54	-70.45	114.64	-2731.62	83.41	-2700.38	296.52
		228	84.86	10.26	-774.45	10.10	-774.29	11.41	-0.10	-3060.18	-0.71	-3059.56	-43.41
90	102	230	40.38	-1.21	-396.92	-1.31	-396.82	-6.39	4.04	-1370.35	3.28	-1369.59	32.22
		83	40.83	4.32	-395.75	4.06	-395.49	10.24	46.32	-1375.96	44.35	-1373.99	-52.88
		73	40.80	-0.41	-415.56	-1.33	-414.63	-19.55	54.83	-1317.26	51.41	-1313.84	68.42
		228	39.39	1.38	-375.97	1.27	-375.86	6.39	0.89	-1371.37	0.24	-1370.72	-29.73
91	2	213	149.69	-3.79	-1508.39	-4.29	-1507.89	-27.32	34.53	-4950.84	28.34	-4944.66	175.44
		59	148.55	32.12	-1383.73	31.84	-1383.46	19.70	49.91	-5227.00	36.49	-5213.58	-265.79
		83	144.53	-12.52	-1591.74	-20.26	-1584.00	-110.31	172.61	-4381.91	118.07	-4327.37	495.44
		230	136.87	4.80	-1299.75	4.17	-1299.11	28.81	-7.00	-4794.53	-9.40	-4792.14	-107.12
91	26	213	39.85	0.96	-384.06	0.83	-383.93	-7.12	-0.09	-1376.42	-0.68	-1375.82	28.58
		59	41.15	-0.48	-421.40	-1.33	-420.56	18.85	53.94	-1321.59	50.39	-1318.04	-69.87
		83	41.18	4.34	-401.46	4.12	-401.24	-9.35	44.87	-1380.39	42.99	-1378.50	51.83
		230	40.84	-1.63	-405.11	-1.76	-404.98	7.25	2.87	-1375.40	2.08	-1374.62	-32.95
91	58	213	39.56	1.23	-378.99	1.11	-378.87	-6.66	0.50	-1373.27	-0.11	-1372.65	29.12
		59	40.93	-0.45	-417.81	-1.34	-416.92	19.29	54.54	-1318.82	51.03	-1315.31	-69.36
		83	40.96	4.34	-397.85	4.10	-397.61	-9.90	45.73	-1377.70	43.83	-1375.79	52.09
		230	40.55	-1.37	-400.05	-1.49	-399.93	6.71	3.61	-1372.24	2.84	-1371.46	-32.67
91	85	213	39.39	1.39	-375.91	1.28	-375.80	-6.39	0.86	-1371.35	0.23	-1370.71	29.45
		59	40.80	-0.43	-415.63	-1.35	-414.71	19.56	54.91	-1317.12	51.42	-1313.63	-69.05
		83	40.83	4.34	-395.66	4.08	-395.40	-10.23	46.25	-1376.05	44.33	-1374.13	52.25
		230	40.38	-1.22	-396.97	-1.32	-396.86	6.39	4.06	-1370.30	3.29	-1369.54	-32.50
91	87	213	105.04	-2.34	-1055.71	-2.69	-1055.37	-19.07	23.10	-3483.37	18.93	-3479.20	120.88
		59	104.47	21.30	-977.85	21.05	-977.60	15.74	40.60	-3660.29	31.18	-3650.87	-186.40
		83	101.80	-7.87	-1113.82	-12.96	-1108.72	-74.90	120.30	-3103.80	84.62	-3068.13	337.26
		230	96.63	3.04	-919.43	2.60	-918.99	20.06	-4.13	-3379.06	-5.83	-3377.36	-75.75
91	97	213	99.93	-1.92	-1001.59	-2.24	-1001.26	-18.03	20.90	-3322.69	17.06	-3318.85	113.23
		59	99.61	19.05	-936.89	18.76	-936.59	16.84	46.02	-3474.09	37.08	-3465.15	-177.21
		83	97.21	-6.58	-1056.49	-11.11	-1051.96	-68.81	115.70	-2980.45	84.20	-2948.95	310.71
		230	92.49	2.57	-881.81	2.16	-881.40	18.93	-3.14	-3228.69	-4.79	-3227.04	-73.02
91	102	213	39.39	1.39	-375.91	1.28	-375.80	-6.39	0.86	-1371.35	0.23	-1370.71	29.45
		59	40.80	-0.43	-415.63	-1.35	-414.71	19.56	54.91	-1317.12	51.42	-1313.63	-69.05
		83	40.83	4.34	-395.66	4.08	-395.40	-10.23	46.25	-1376.05	44.33	-1374.13	52.25
		230	40.38	-1.22	-396.97	-1.32	-396.86	6.39	4.06	-1370.30	3.29	-1369.54	-32.50
92	2	217	147.74	7.14	-1426.80	6.03	-1425.69	-39.88	7.76	-5091.95	1.85	-5086.04	173.51
		75	152.73	12.69	-1566.90	6.20	-1560.41	101.08	119.24	-4971.58	76.93	-4929.26	-462.19
		59	151.79	17.67	-1551.17	12.32	-1545.82	-91.46	42.62	-4991.87	-5.48	-4943.77	489.70
		213	148.18	-6.79	-1449.46	-8.04	-1448.21	42.50	34.11	-5053.98	29.78	-5049.65	-148.44
92	26	217	37.53	3.51	-346.75	3.37	-346.61	-6.97	-2.86	-1342.99	-3.31	-1342.55	24.49
		75	39.79	-4.93	-425.39	-6.83	-423.49	28.23	63.63	-1229.13	57.93	-1223.43	-85.63
		59	39.88	9.57	-365.66	9.57	-365.66	0.16	36.93	-1405.20	36.14	-1404.41	33.69
		213	40.50	-4.16	-409.73	-4.30	-409.60	7.37	6.16	-1339.88	5.19	-1338.91	-36.21
92	58	217	37.25	3.81	-341.91	3.68	-341.78	-6.61	-2.51	-1340.18	-3.00	-1339.69	25.59
		75	39.59	-4.83	-422.01	-6.80	-420.05	28.57	63.87	-1226.51	58.30	-1220.94	-84.60
		59	39.68	9.51	-362.23	9.51	-362.23	-0.48	37.74	-1402.80	36.92	-1401.98	34.47
		213	40.23	-3.94	-404.90	-4.06	-404.79	6.75	6.83	-1337.05	5.90	-1336.12	-35.35

Elem.	Cmb	Nodo	Von Mises	N max	N min	N 1	N 2	N 1-2	M max	M min	M 1	M 2	M 1-2
92	85	217	37.09	3.99	-338.97	3.87	-338.85	-6.38	-2.29	-1338.46	-2.81	-1337.94	26.26
		75	39.46	-4.77	-419.96	-6.78	-417.95	28.78	64.01	-1224.90	58.52	-1219.41	-83.97
		59	39.55	9.48	-360.15	9.48	-360.15	-0.87	38.24	-1401.33	37.39	-1400.48	34.95
		213	40.06	-3.81	-401.97	-3.91	-401.87	6.38	7.23	-1335.30	6.33	-1334.40	-34.82
92	87	217	103.44	5.29	-996.39	4.54	-995.64	-27.44	4.83	-3573.06	0.86	-3569.09	119.17
		75	107.08	7.82	-1100.59	3.23	-1096.00	71.22	87.92	-3477.59	59.09	-3448.76	-319.32
		59	106.47	12.89	-1081.99	9.47	-1078.57	-61.09	32.53	-3513.77	1.33	-3482.58	331.13
		213	104.13	-5.04	-1019.89	-5.88	-1019.05	29.19	23.70	-3547.36	20.69	-3544.35	-103.60
92	97	217	98.17	5.30	-943.14	4.61	-942.45	-25.57	4.03	-3398.91	0.39	-3395.26	111.26
		75	101.78	6.39	-1048.00	1.98	-1043.59	68.04	89.75	-3296.95	63.16	-3270.36	-298.89
		59	101.24	12.76	-1022.94	9.82	-1020.00	-55.10	35.57	-3352.85	8.28	-3325.57	302.82
		213	99.20	-5.07	-972.90	-5.83	-972.14	27.14	22.35	-3375.37	19.49	-3372.52	-98.41
92	102	217	37.09	3.99	-338.97	3.87	-338.85	-6.38	-2.29	-1338.46	-2.81	-1337.94	26.26
		75	39.46	-4.77	-419.96	-6.78	-417.95	28.78	64.01	-1224.90	58.52	-1219.41	-83.97
		59	39.55	9.48	-360.15	9.48	-360.15	-0.87	38.24	-1401.33	37.39	-1400.48	34.95
		213	40.06	-3.81	-401.97	-3.91	-401.87	6.38	7.23	-1335.30	6.33	-1334.40	-34.82
93	2	219	136.28	20.28	-1227.09	18.87	-1225.69	-41.87	-2.00	-4975.40	-6.30	-4971.10	146.17
		53	147.68	-12.02	-1656.66	-29.33	-1639.35	167.83	167.89	-4469.45	85.14	-4386.70	-613.93
		75	148.09	49.00	-1360.62	48.14	-1359.76	-34.77	6.35	-5286.23	-20.65	-5259.23	377.05
		217	150.65	-18.94	-1534.74	-20.34	-1533.34	46.08	45.74	-4953.25	38.77	-4946.28	-186.55
93	26	219	33.88	6.08	-293.16	5.93	-293.01	-6.81	-5.83	-1275.27	-6.15	-1274.95	20.23
		53	37.11	-8.83	-413.58	-12.32	-410.08	37.43	73.58	-1103.18	65.05	-1094.65	-99.79
		75	37.25	15.24	-313.92	14.96	-313.64	9.60	29.88	-1396.13	29.73	-1395.98	14.55
		217	38.81	-6.67	-397.85	-6.81	-397.71	7.42	9.61	-1269.98	8.43	-1268.80	-38.81
93	58	219	33.64	6.40	-288.91	6.26	-288.77	-6.54	-5.54	-1273.14	-5.91	-1272.77	21.73
		53	36.94	-8.69	-410.69	-12.25	-407.13	37.67	73.59	-1101.00	65.28	-1092.70	-98.40
		75	37.08	15.13	-310.95	14.88	-310.71	8.90	30.48	-1394.27	30.31	-1394.09	15.79
		217	38.58	-6.49	-393.62	-6.61	-393.50	6.77	10.07	-1267.79	8.97	-1266.69	-37.46
93	85	219	33.50	6.60	-286.33	6.46	-286.19	-6.38	-5.37	-1271.81	-5.77	-1271.41	22.65
		53	36.83	-8.60	-408.93	-12.20	-405.33	37.81	73.59	-1099.65	65.42	-1091.48	-97.55
		75	36.97	15.06	-309.14	14.84	-308.92	8.48	30.85	-1393.12	30.66	-1392.92	16.55
		217	38.44	-6.38	-391.04	-6.49	-390.94	6.37	10.35	-1266.43	9.29	-1265.38	-36.63
93	87	219	95.32	14.40	-856.23	13.44	-855.28	-28.76	-2.07	-3486.49	-4.97	-3483.59	100.47
		53	103.36	-9.17	-1158.96	-21.18	-1146.94	116.93	121.36	-3125.87	65.48	-3070.00	-422.29
		75	103.66	34.57	-948.19	34.07	-947.70	-22.05	7.70	-3709.25	-9.68	-3691.87	253.57
		217	105.56	-13.49	-1075.29	-14.43	-1074.35	31.57	31.86	-3471.01	27.09	-3466.24	-129.25
93	97	219	90.37	13.85	-809.79	12.98	-808.92	-26.76	-2.60	-3311.88	-5.26	-3309.21	93.92
		53	98.07	-9.43	-1099.02	-20.73	-1087.71	110.41	120.90	-2963.00	69.86	-2911.96	-393.44
		75	98.36	33.07	-895.58	32.69	-895.21	-18.68	12.52	-3527.97	-2.55	-3512.90	230.50
		217	100.26	-13.02	-1021.27	-13.87	-1020.41	29.29	30.11	-3297.23	25.65	-3292.77	-121.75
93	102	219	33.50	6.60	-286.33	6.46	-286.19	-6.38	-5.37	-1271.81	-5.77	-1271.41	22.65
		53	36.83	-8.60	-408.93	-12.20	-405.33	37.81	73.59	-1099.65	65.42	-1091.48	-97.55
		75	36.97	15.06	-309.14	14.84	-308.92	8.48	30.85	-1393.12	30.66	-1392.92	16.55
		217	38.44	-6.38	-391.04	-6.49	-390.94	6.37	10.35	-1266.43	9.29	-1265.38	-36.63
94	2	221	115.70	32.64	-923.05	31.11	-921.52	-38.21	-11.54	-4598.21	-13.75	-4595.99	100.74
		69	133.18	-33.93	-1635.33	-65.37	-1603.90	222.16	227.86	-3726.99	94.30	-3593.43	-714.39
		53	134.93	84.15	-1059.81	83.21	-1058.87	32.87	-19.38	-5329.69	-27.82	-5321.25	211.55
		219	143.89	-31.75	-1513.87	-33.05	-1512.57	43.94	55.46	-4591.44	46.13	-4582.11	-207.95
94	26	221	28.93	8.66	-223.79	8.48	-223.60	-6.64	-9.17	-1174.16	-9.38	-1173.95	15.77
		69	33.12	-11.97	-386.39	-17.79	-380.57	46.32	83.27	-944.91	70.89	-932.53	-112.15
		53	33.32	21.63	-246.73	20.29	-245.39	18.91	23.81	-1353.91	23.78	-1353.89	-5.51
		219	35.82	-9.13	-369.77	-9.28	-369.62	7.39	13.03	-1166.66	11.64	-1165.27	-40.48
94	58	221	28.75	8.99	-220.43	8.81	-220.25	-6.48	-8.60	-1172.61	-8.86	-1172.35	17.45
		69	33.00	-11.79	-384.21	-17.68	-378.32	46.46	83.48	-943.13	71.42	-931.07	-110.60
		53	33.19	21.45	-244.44	20.20	-243.19	18.21	24.11	-1352.46	24.10	-1352.45	-4.00
		219	35.63	-9.00	-366.42	-9.13	-366.30	6.73	13.22	-1164.96	11.94	-1163.67	-38.84
94	85	221	28.64	9.19	-218.38	9.01	-218.20	-6.38	-8.25	-1171.63	-8.55	-1171.33	18.48
		69	32.92	-11.68	-382.89	-17.61	-376.96	46.55	83.60	-942.01	71.74	-930.15	-109.64
		53	33.10	21.35	-243.04	20.15	-241.84	17.78	24.29	-1351.54	24.29	-1351.53	-3.07
		219	35.52	-8.92	-364.39	-9.03	-364.27	6.33	13.33	-1163.88	12.12	-1162.66	-37.84
94	87	221	80.95	22.98	-644.48	21.94	-643.44	-26.32	-8.80	-3221.68	-10.31	-3220.17	69.63
		69	93.17	-24.19	-1141.27	-45.93	-1119.53	154.32	162.28	-2609.49	72.43	-2519.64	-490.88
		53	94.37	58.90	-738.90	58.16	-738.16	24.28	-9.99	-3733.02	-15.31	-3727.70	140.63
		219	100.66	-22.36	-1057.83	-23.24	-1056.95	30.14	38.73	-3216.12	32.37	-3209.76	-143.68
94	97	221	76.78	21.94	-609.92	20.98	-608.96	-24.56	-9.04	-3059.86	-10.45	-3058.44	65.59
		69	88.37	-23.37	-1079.52	-43.74	-1059.15	145.25	158.72	-2476.31	76.98	-2394.57	-456.84
		53	89.47	55.88	-698.22	55.10	-697.44	24.29	-3.99	-3543.98	-8.49	-3539.48	126.15
		219	95.46	-21.35	-1001.90	-22.15	-1001.10	27.99	36.69	-3053.79	30.79	-3047.89	-134.90
94	102	221	28.64	9.19	-218.38	9.01	-218.20	-6.38	-8.25	-1171.63	-8.55	-1171.33	18.48
		69	32.92	-11.68	-382.89	-17.61	-376.96	46.55	83.60	-942.01	71.74	-930.15	-109.64
		53	33.10	21.35	-243.04	20.15	-241.84	17.78	24.29	-1351.54	24.29	-1351.53	-3.07
		219	35.52	-8.92	-364.39	-9.03	-364.27	6.33	13.33	-1163.88	12.12	-1162.66	-37.84
95	2	225	86.58	43.76	-559.43	42.77	-558.44	-24.47	-47.66	-3863.27	-48.26	-3862.66	48.00
		57	107.77	-56.70	-1463.29	-97.83	-1422.15	237.01	374.51	-2677.28	201.49	-2504.26	-705.75
		69	112.66	124.61	-677.64	108.10	-661.14	113.88	-60.25	-5124.45	-60.25	-5124.45	-4.91

Elem.	Cmb	Nodo	Von Mises	N max	N min	N 1	N 2	N 1-2	M max	M min	M 1	M 2	M 1-2
		221	127.70	-42.17	-1376.08	-42.90	-1375.36	31.10	79.44	-3974.01	69.22	-3963.78	-203.35
95	26	225	22.76	11.17	-139.43	10.89	-139.16	-6.48	-12.12	-1041.21	-12.24	-1041.09	10.74
		57	27.87	-13.86	-344.47	-23.17	-335.16	54.70	93.34	-756.63	75.31	-738.60	-122.46
		69	28.11	29.64	-165.44	25.51	-161.31	28.08	18.43	-1279.90	17.88	-1279.34	-26.92
		221	31.56	-11.48	-325.96	-11.64	-325.80	7.26	15.61	-1031.61	14.00	-1030.00	-41.04
95	58	225	22.63	11.49	-137.18	11.21	-136.90	-6.40	-11.26	-1039.22	-11.41	-1039.07	12.37
		57	27.78	-13.65	-343.14	-23.03	-333.76	54.80	93.79	-754.47	76.18	-736.86	-120.94
		69	28.02	29.39	-163.92	25.42	-159.95	27.40	18.82	-1278.01	18.32	-1277.51	-25.35
		221	31.42	-11.40	-323.72	-11.54	-323.58	6.63	15.88	-1029.37	14.39	-1027.89	-39.35
95	85	225	22.55	11.68	-135.80	11.41	-135.53	-6.36	-10.74	-1037.99	-10.91	-1037.82	13.38
		57	27.73	-13.52	-342.33	-22.94	-332.91	54.87	94.06	-753.13	76.71	-735.78	-119.99
		69	27.96	29.24	-162.99	25.37	-159.12	26.99	19.05	-1276.84	18.60	-1276.38	-24.38
		221	31.34	-11.35	-322.36	-11.48	-322.23	6.25	16.04	-1027.99	14.63	-1026.58	-38.31
95	87	225	60.73	30.73	-391.06	30.03	-390.36	-17.16	-33.20	-2713.91	-33.63	-2713.48	33.79
		57	75.54	-39.60	-1021.17	-68.28	-992.49	165.32	261.22	-1884.27	144.56	-1767.61	-486.50
		69	78.84	86.97	-473.49	75.45	-461.97	79.52	-37.68	-3586.50	-37.69	-3586.48	-6.52
		221	89.31	-29.63	-960.37	-30.13	-959.87	21.57	55.08	-2786.38	48.10	-2779.40	-140.67
95	97	225	57.74	29.26	-370.54	28.59	-369.87	-16.31	-31.34	-2584.57	-31.76	-2584.16	32.63
		57	71.79	-37.49	-965.89	-64.59	-938.79	156.30	248.96	-1797.54	142.56	-1691.15	-454.33
		69	74.79	82.27	-448.45	71.38	-437.55	75.26	-29.39	-3402.12	-29.41	-3402.10	-9.20
		221	84.67	-28.22	-908.44	-28.69	-907.98	20.27	51.78	-2648.44	45.29	-2641.95	-132.27
95	102	225	22.55	11.68	-135.80	11.41	-135.53	-6.36	-10.74	-1037.99	-10.91	-1037.82	13.38
		57	27.73	-13.52	-342.33	-22.94	-332.91	54.87	94.06	-753.13	76.71	-735.78	-119.99
		69	27.96	29.24	-162.99	25.37	-159.12	26.99	19.05	-1276.84	18.60	-1276.38	-24.38
		221	31.34	-11.35	-322.36	-11.48	-322.23	6.25	16.04	-1027.99	14.63	-1026.58	-38.31
96	2	227	56.96	52.78	-184.53	52.22	-183.96	-11.57	-30.10	-3108.89	-30.23	-3108.76	-20.07
		81	79.51	-68.82	-1177.62	-118.55	-1127.89	229.50	374.22	-1859.96	163.62	-1649.37	-652.80
		57	82.31	191.50	-312.34	121.56	-242.40	174.21	60.66	-4417.10	48.55	-4404.99	-232.56
		225	101.52	-51.12	-1125.73	-51.38	-1125.47	16.73	52.66	-3088.39	40.81	-3076.54	-192.60
96	26	227	15.40	13.41	-41.76	12.66	-41.01	-6.41	-13.96	-874.97	-13.98	-874.95	4.25
		81	21.37	-13.19	-289.29	-28.30	-274.18	62.80	104.65	-540.06	77.22	-512.63	-130.13
		57	21.69	43.55	-75.55	30.51	-62.51	37.20	15.11	-1173.66	12.92	-1171.47	-50.92
		225	26.07	-13.35	-267.20	-13.54	-267.02	6.92	17.19	-864.31	15.33	-862.46	-40.37
96	58	227	15.31	13.68	-40.62	12.94	-39.89	-6.28	-12.94	-872.03	-12.98	-872.00	5.72
		81	21.31	-13.08	-288.40	-28.14	-273.35	62.59	105.23	-537.05	78.30	-510.12	-128.72
		57	21.61	43.19	-74.44	30.43	-61.67	36.59	15.79	-1170.96	13.73	-1168.89	-49.43
		225	25.98	-13.33	-266.09	-13.49	-265.93	6.37	17.77	-861.15	16.06	-859.43	-38.81
96	85	227	15.26	13.84	-39.93	13.11	-39.20	-6.20	-12.33	-870.24	-12.38	-870.19	6.65
		81	21.27	-13.02	-287.86	-28.04	-272.84	62.47	105.56	-535.19	78.95	-508.59	-127.83
		57	21.57	42.97	-73.76	30.38	-61.16	36.21	16.21	-1169.30	14.22	-1167.31	-48.50
		225	25.92	-13.31	-265.41	-13.46	-265.26	6.03	18.13	-859.22	16.49	-857.58	-37.84
96	87	227	40.01	37.00	-128.31	36.56	-127.87	-8.54	-21.73	-2188.61	-21.81	-2188.53	-12.49
		81	55.83	-47.63	-823.44	-82.77	-788.30	161.33	262.63	-1310.41	119.61	-1167.39	-452.25
		57	57.75	133.36	-218.03	85.09	-169.75	120.97	42.58	-3100.62	34.26	-3092.30	-161.51
		225	71.14	-35.86	-785.87	-36.05	-785.68	11.96	37.49	-2173.45	29.41	-2165.37	-133.45
96	97	227	38.09	35.17	-120.92	34.70	-120.45	-8.54	-21.27	-2088.82	-21.31	-2088.77	-9.96
		81	53.16	-44.67	-780.47	-78.33	-746.81	153.74	251.83	-1251.30	120.40	-1119.86	-424.60
		57	54.93	125.88	-206.29	80.74	-161.15	113.83	42.49	-2950.15	34.75	-2942.41	-152.01
		225	67.57	-34.10	-743.60	-34.29	-743.41	11.58	36.24	-2073.71	28.72	-2066.20	-125.71
96	102	227	15.26	13.84	-39.93	13.11	-39.20	-6.20	-12.33	-870.24	-12.38	-870.19	6.65
		81	21.27	-13.02	-287.86	-28.04	-272.84	62.47	105.56	-535.19	78.95	-508.59	-127.83
		57	21.57	42.97	-73.76	30.38	-61.16	36.21	16.21	-1169.30	14.22	-1167.31	-48.50
		225	25.92	-13.31	-265.41	-13.46	-265.26	6.03	18.13	-859.22	16.49	-857.58	-37.84
97	2	229	42.85	193.18	48.60	48.84	192.94	-5.91	-18.04	-2302.06	-21.34	-2298.76	-86.76
		77	49.00	-55.38	-860.07	-126.33	-789.13	228.16	423.27	-1046.23	133.41	-756.37	-584.75
		81	66.96	344.82	-55.02	129.16	160.64	199.30	112.97	-3734.32	68.50	-3689.84	-411.25
		227	73.38	-52.61	-808.41	-52.75	-808.27	10.19	47.29	-2273.40	35.29	-2261.40	-166.46
97	36	229	12.97	66.28	11.62	12.19	65.71	-5.54	-10.26	-669.49	-10.26	-669.49	-0.68
		77	13.68	-8.29	-221.25	-31.95	-197.60	66.92	122.04	-296.60	78.09	-252.65	-128.33
		81	18.10	87.46	-4.58	34.42	48.46	45.48	16.09	-1033.39	10.63	-1027.93	-75.50
		227	19.52	-13.40	-196.25	-13.52	-196.14	4.54	17.27	-663.53	15.61	-661.87	-33.58
97	68	229	12.99	67.73	11.50	11.99	67.24	-5.24	-11.36	-666.03	-11.37	-666.02	-2.13
		77	13.55	-8.05	-220.07	-32.13	-195.99	67.27	122.18	-294.88	76.90	-249.60	-129.76
		81	18.17	88.87	-4.25	34.50	50.11	45.90	17.28	-1030.50	11.61	-1024.83	-76.88
		227	19.40	-13.31	-194.70	-13.44	-194.56	4.90	18.31	-660.17	16.50	-658.36	-35.03
97	85	229	13.00	68.62	11.42	11.87	68.17	-5.06	-12.02	-663.93	-12.03	-663.91	-3.07
		77	13.46	-7.90	-219.35	-32.25	-195.01	67.49	122.32	-293.88	76.18	-247.74	-130.67
		81	18.20	89.73	-4.06	34.55	51.12	46.16	18.01	-1028.75	12.21	-1022.94	-77.76
		227	19.33	-13.25	-193.75	-13.40	-193.61	5.12	18.96	-658.13	17.04	-656.22	-35.95
97	87	229	30.30	137.92	33.94	34.14	137.71	-4.61	-13.72	-1623.14	-15.83	-1621.03	-58.25
		77	34.45	-38.03	-602.57	-88.52	-552.08	161.10	297.73	-735.91	99.10	-537.28	-407.26
		81	47.05	241.82	-37.19	90.72	113.91	139.02	77.57	-2626.57	47.29	-2596.29	-284.53
		227	51.50	-36.85	-564.77	-36.95	-564.66	7.48	34.02	-1603.32	25.80	-1595.09	-115.77
97	97	229	29.04	133.49	32.12	32.35	133.26	-4.85	-14.09	-1551.59	-15.88	-1549.79	-52.48
		77	32.85	-35.36	-572.28	-84.08	-523.56	154.22	285.70	-701.25	101.53	-517.08	-384.51

Elem.	Cmb	Nodo	Von Mises	N max	N min	N 1	N 2	N 1-2	M max	M min	M 1	M 2	M 1-2
		81	44.84	229.88	-34.00	86.37	109.51	131.43	74.12	-2504.15	46.22	-2476.24	-266.77
		227	48.99	-34.98	-534.80	-35.09	-534.69	7.43	33.24	-1533.10	25.54	-1525.40	-109.54
97	102	229	13.00	68.62	11.42	11.87	68.17	-5.06	-12.02	-663.93	-12.03	-663.91	-3.07
		77	13.46	-7.90	-219.35	-32.25	-195.01	67.49	122.32	-293.88	76.18	-247.74	-130.67
		81	18.20	89.73	-4.06	34.55	51.12	46.16	18.01	-1028.75	12.21	-1022.94	-77.76
		227	19.33	-13.25	-193.75	-13.40	-193.61	5.12	18.96	-658.13	17.04	-656.22	-35.95
98	2	215	47.60	550.89	9.30	9.88	550.31	17.67	11.71	-1356.72	-9.86	-1335.16	-170.44
		49	34.66	-25.88	-491.47	-121.84	-395.51	188.33	606.10	-303.71	80.54	221.86	-449.38
		77	78.81	670.99	24.94	124.72	571.21	233.46	222.28	-3031.56	99.80	-2909.08	-619.30
		229	44.04	-26.42	-461.70	-26.49	-461.63	-5.47	36.89	-1428.41	25.83	-1417.35	-126.82
98	33	215	14.78	180.85	-0.09	-0.03	180.79	3.37	-11.64	-388.46	-12.88	-387.23	-21.51
		49	9.41	4.30	-125.76	-33.11	-88.35	58.87	183.01	-56.35	66.65	60.01	-119.63
		77	22.34	201.60	12.10	35.06	178.64	61.83	30.67	-847.82	13.96	-831.11	-120.00
		229	11.36	-5.26	-101.56	-5.27	-101.56	0.55	21.00	-419.23	18.42	-416.66	-33.56
98	65	215	14.70	178.00	-0.03	0.02	177.95	2.92	-10.97	-392.36	-11.99	-391.34	-19.71
		49	9.37	3.19	-127.18	-33.02	-90.97	58.39	180.12	-55.97	67.65	56.51	-117.91
		77	22.23	199.06	11.93	34.99	176.00	61.52	29.09	-850.86	12.83	-834.60	-118.49
		229	11.56	-5.37	-104.42	-5.37	-104.42	0.27	19.74	-423.07	17.41	-420.75	-31.99
98	85	215	14.65	176.26	4.78e-03	0.04	176.22	2.66	-10.55	-394.74	-11.45	-393.84	-18.57
		49	9.34	2.54	-128.06	-32.97	-92.56	58.11	178.34	-55.71	68.25	54.37	-116.82
		77	22.17	197.53	11.83	34.96	174.39	61.32	28.12	-852.70	12.15	-836.72	-117.53
		229	11.67	-5.44	-106.16	-5.44	-106.16	0.10	18.97	-425.41	16.80	-423.24	-30.98
98	87	215	33.68	390.76	6.21	6.59	390.37	12.13	6.11	-956.82	-8.10	-942.62	-116.10
		49	24.34	-17.01	-344.62	-85.62	-276.01	133.30	427.50	-209.56	62.79	155.16	-315.16
		77	55.48	473.62	18.25	87.80	404.06	163.82	151.53	-2134.33	68.15	-2050.95	-428.54
		229	30.92	-18.34	-321.95	-18.38	-321.91	-3.63	27.10	-1008.98	19.46	-1001.33	-88.67
98	97	215	32.31	375.77	5.60	5.94	375.43	11.28	3.74	-914.84	-8.83	-902.27	-106.70
		49	23.18	-15.06	-327.60	-81.57	-261.08	127.92	409.95	-194.79	67.72	147.45	-299.73
		77	52.97	453.24	18.08	83.81	387.52	155.82	141.86	-2036.80	65.01	-1959.96	-401.88
		229	29.42	-17.25	-304.29	-17.29	-304.25	-3.25	27.03	-966.38	19.79	-959.14	-84.48
98	102	215	14.65	176.26	4.78e-03	0.04	176.22	2.66	-10.55	-394.74	-11.45	-393.84	-18.57
		49	9.34	2.54	-128.06	-32.97	-92.56	58.11	178.34	-55.71	68.25	54.37	-116.82
		77	22.17	197.53	11.83	34.96	174.39	61.32	28.12	-852.70	12.15	-836.72	-117.53
		229	11.67	-5.44	-106.16	-5.44	-106.16	0.10	18.97	-425.41	16.80	-423.24	-30.98
99	2	223	45.99	754.35	-128.98	-101.83	727.21	152.45	362.50	-245.87	-180.89	297.51	-187.91
		67	30.28	189.71	-86.61	-56.89	159.99	-85.60	1576.64	530.00	530.12	1576.52	11.40
		49	93.37	1072.37	-69.63	57.21	945.52	358.84	352.93	-2340.37	-11.03	-1976.42	-920.75
		215	16.83	117.06	-115.56	68.20	-66.70	-94.76	128.52	-481.11	124.49	-477.08	-49.41
99	21	223	15.34	244.08	-44.06	-36.47	236.49	46.14	105.02	-66.67	-64.12	102.48	-20.74
		67	10.47	81.87	-23.39	-15.40	73.88	-27.88	491.02	208.06	209.07	490.01	-16.89
		49	26.92	333.88	-20.51	14.89	298.48	106.27	21.61	-635.00	-35.98	-577.42	-185.73
		215	4.28	46.77	-12.27	24.40	10.09	-28.64	52.51	-138.42	50.44	-136.35	-19.78
99	53	223	15.08	240.65	-43.17	-35.43	232.92	46.22	98.82	-67.07	-64.98	96.73	-18.51
		67	10.20	78.62	-22.92	-14.40	70.11	-28.15	485.94	207.58	208.36	485.15	-14.75
		49	26.77	329.99	-20.84	14.68	294.47	105.83	20.92	-638.04	-35.04	-582.08	-183.70
		215	4.41	45.42	-14.90	24.24	6.28	-28.79	51.37	-143.54	49.73	-141.90	-17.82
99	85	223	14.92	238.57	-42.63	-34.80	230.74	46.27	95.06	-67.33	-65.51	93.23	-17.13
		67	10.04	76.67	-22.65	-13.79	67.81	-28.31	482.85	207.27	207.92	482.20	-13.42
		49	26.67	327.62	-21.04	14.55	292.03	105.56	20.49	-639.88	-34.48	-584.91	-182.42
		215	4.49	44.64	-16.54	24.14	3.96	-28.88	50.71	-146.67	49.30	-145.27	-16.59
99	87	223	32.65	534.71	-91.67	-72.53	515.57	107.80	253.30	-171.85	-129.33	210.77	-127.56
		67	21.52	136.68	-60.75	-39.77	115.70	-60.85	1115.35	381.09	381.14	1115.30	5.81
		49	65.79	758.58	-49.22	40.08	669.28	253.30	237.43	-1644.98	-11.95	-1395.60	-638.16
		215	11.81	83.84	-79.09	48.68	-43.94	-67.02	92.44	-340.30	89.57	-337.42	-35.15
99	97	223	31.42	513.85	-88.33	-70.03	495.56	103.35	239.89	-162.70	-125.33	202.52	-116.82
		67	20.73	133.49	-57.77	-37.69	113.41	-58.63	1070.14	373.32	373.34	1070.12	3.35
		49	62.86	727.54	-47.15	38.08	642.31	242.41	217.93	-1567.02	-13.41	-1335.68	-599.51
		215	11.24	81.41	-73.32	47.12	-39.02	-64.27	90.18	-326.45	87.33	-323.60	-34.35
99	102	223	14.92	238.57	-42.63	-34.80	230.74	46.27	95.06	-67.33	-65.51	93.23	-17.13
		67	10.04	76.67	-22.65	-13.79	67.81	-28.31	482.85	207.27	207.92	482.20	-13.42
		49	26.67	327.62	-21.04	14.55	292.03	105.56	20.49	-639.88	-34.48	-584.91	-182.42
		215	4.49	44.64	-16.54	24.14	3.96	-28.88	50.71	-146.67	49.30	-145.27	-16.59
100	2	231	59.66	76.33	-1046.25	-124.79	-845.13	430.49	-18.73	-369.22	-63.14	-324.81	116.58
		66	181.04	2955.64	-196.05	513.25	2246.34	-1316.20	2127.63	141.89	246.10	2023.41	-442.82
		67	107.65	1165.80	-928.13	-580.66	818.32	779.00	1170.75	-137.42	921.88	111.45	-513.45
		223	65.72	911.73	-141.05	180.64	590.05	-484.96	1419.23	-33.94	-15.78	1401.06	-161.44
100	25	231	19.02	19.22	-329.93	-39.63	-271.08	130.71	5.35	-132.80	-24.30	-103.14	56.73
		66	60.29	964.15	-58.02	173.62	732.51	-427.92	730.39	-4.93	69.14	656.32	-221.30
		67	31.07	368.57	-297.33	-191.54	262.78	243.43	240.95	39.81	237.88	42.88	-24.65
		223	21.52	300.51	-38.63	56.78	205.10	-152.49	445.77	-5.52	3.71	436.54	-63.87
100	57	231	19.29	20.29	-333.46	-40.56	-272.62	133.50	8.53	-135.17	-20.70	-105.94	57.85
		66	59.78	955.47	-58.34	171.61	725.52	-424.56	726.03	-1.53	72.47	652.02	-219.92
		67	30.90	362.84	-297.64	-191.08	256.28	242.95	240.43	34.42	236.92	37.93	-26.67
		223	21.46	301.09	-38.73	58.32	204.05	-153.49	442.00	-6.04	2.86	433.10	-62.54
100	85	231	19.46	20.94	-335.62	-41.12	-273.56	135.19	10.52	-136.65	-18.49	-107.64	58.55

Elem.	Cmb	Nodo	Von Mises	N max	N min	N 1	N 2	N 1-2	M max	M min	M 1	M 2	M 1-2
		66	59.48	950.20	-58.54	170.39	721.27	-422.52	723.36	0.57	74.52	649.41	-219.05
		67	30.79	359.36	-297.83	-190.81	252.33	242.65	240.13	31.12	236.33	34.92	-27.91
		223	21.43	301.46	-38.79	59.25	203.41	-154.10	439.71	-6.37	2.34	431.00	-61.71
100	87	231	42.37	53.68	-742.24	-88.67	-599.89	305.02	-11.25	-264.20	-44.56	-230.89	85.53
		66	128.62	2097.12	-138.51	364.88	1593.73	-933.80	1514.07	95.47	174.00	1435.53	-324.42
		67	75.86	825.11	-658.46	-412.55	579.19	551.69	809.90	-84.84	646.09	78.96	-346.02
		223	46.67	648.00	-99.19	128.33	420.49	-343.85	1004.73	-23.43	-10.21	991.51	-115.85
100	97	231	40.80	51.18	-713.97	-85.43	-577.36	293.03	-8.29	-256.16	-42.67	-221.79	85.67
		66	123.88	2017.40	-132.65	351.68	1533.07	-898.20	1461.02	88.78	168.90	1380.90	-321.75
		67	72.50	791.77	-633.32	-397.36	555.82	529.70	761.31	-68.91	615.94	76.45	-315.52
		223	44.94	624.41	-94.59	123.60	406.22	-330.56	964.33	-22.04	-8.86	951.14	-113.27
100	102	231	19.46	20.94	-335.62	-41.12	-273.56	135.19	10.52	-136.65	-18.49	-107.64	58.55
		66	59.48	950.20	-58.54	170.39	721.27	-422.52	723.36	0.57	74.52	649.41	-219.05
		67	30.79	359.36	-297.83	-190.81	252.33	242.65	240.13	31.12	236.33	34.92	-27.91
		223	21.43	301.46	-38.79	59.25	203.41	-154.10	439.71	-6.37	2.34	431.00	-61.71
101	2	191	100.07	1122.93	-1019.99	-690.77	793.71	772.73	1024.53	481.08	893.33	612.29	-232.57
		232	79.68	1143.24	-92.65	213.14	837.44	-533.31	1603.19	-61.53	-40.44	1582.09	-186.20
		233	67.33	47.05	-1221.56	-152.03	-1022.48	461.43	40.44	-315.50	-9.22	-265.83	123.33
		190	204.60	3404.77	-152.62	638.95	2613.20	-1479.64	2083.94	-112.93	66.22	1904.80	-601.22
101	32	191	31.07	368.60	-297.31	-191.52	262.80	243.43	241.13	39.69	238.04	42.77	-24.74
		232	21.52	300.46	-38.65	56.77	205.04	-152.49	445.73	-5.52	3.72	436.49	-63.92
		233	19.02	19.23	-329.92	-39.62	-271.06	130.71	5.38	-132.83	-24.32	-103.12	56.77
		190	60.29	964.08	-58.02	173.60	732.46	-427.89	730.47	-4.75	69.32	656.40	-221.29
101	64	191	30.90	362.86	-297.62	-191.06	256.30	242.95	240.61	34.29	237.08	37.82	-26.76
		232	21.46	301.05	-38.75	58.31	203.99	-153.49	441.97	-6.05	2.87	433.04	-62.59
		233	19.29	20.30	-333.45	-40.55	-272.60	133.50	8.55	-135.20	-20.72	-105.92	57.89
		190	59.78	955.40	-58.35	171.58	725.47	-424.53	726.11	-1.35	72.65	652.10	-219.91
101	85	191	30.80	359.38	-297.81	-190.78	252.35	242.66	240.30	30.99	236.48	34.81	-28.00
		232	21.43	301.41	-38.81	59.25	203.35	-154.10	439.67	-6.38	2.34	430.95	-61.76
		233	19.46	20.95	-335.61	-41.12	-273.54	135.20	10.54	-136.68	-18.51	-107.62	58.59
		190	59.47	950.13	-58.54	170.36	721.22	-422.48	723.44	0.74	74.70	649.49	-219.04
101	87	191	70.81	796.53	-719.69	-485.95	562.79	547.50	711.50	328.42	627.08	412.83	-158.78
		232	55.97	802.26	-66.85	150.00	585.41	-376.09	1127.37	-41.83	-26.65	1112.19	-132.37
		233	47.48	34.14	-859.09	-106.83	-718.12	325.65	28.26	-228.45	-8.62	-191.57	90.04
		190	144.33	2396.53	-109.55	448.68	1838.30	-1042.76	1485.64	-75.07	54.11	1356.46	-430.02
101	97	191	67.95	766.05	-688.38	-463.39	541.06	525.93	672.60	304.23	599.90	376.93	-146.61
		232	53.30	763.09	-65.43	143.09	554.57	-359.56	1074.59	-38.53	-23.48	1059.54	-128.54
		233	45.41	33.58	-819.10	-101.77	-683.75	311.59	28.19	-224.45	-10.48	-185.78	90.96
		190	138.01	2286.77	-106.58	427.07	1753.12	-996.21	1436.64	-62.17	64.34	1310.13	-416.67
101	102	191	30.80	359.38	-297.81	-190.78	252.35	242.66	240.30	30.99	236.48	34.81	-28.00
		232	21.43	301.41	-38.81	59.25	203.35	-154.10	439.67	-6.38	2.34	430.95	-61.76
		233	19.46	20.95	-335.61	-41.12	-273.54	135.20	10.54	-136.68	-18.51	-107.62	58.59
		190	59.47	950.13	-58.54	170.36	721.22	-422.48	723.44	0.74	74.70	649.49	-219.04
102	2	192	85.68	1125.20	-75.93	22.35	1026.93	329.22	266.95	-1723.56	-77.53	-1379.08	-753.01
		234	15.32	285.22	34.10	93.72	225.60	-106.85	143.01	-186.67	138.46	-182.11	-38.47
		232	55.18	809.78	-156.68	-129.44	782.54	159.95	673.66	-218.37	-196.04	651.32	-139.37
		191	45.50	504.98	-70.13	-23.97	458.82	-156.26	1624.14	583.60	587.71	1620.03	65.28
102	24	192	26.91	333.66	-20.41	14.89	298.35	106.08	21.72	-635.41	-35.75	-577.94	-185.65
		234	4.29	46.88	-12.35	24.44	10.08	-28.73	52.58	-138.94	50.54	-136.90	-19.68
		232	15.38	244.22	-43.99	-36.34	236.56	46.33	103.07	-65.16	-64.06	101.96	-13.59
		191	10.45	81.74	-23.33	-15.33	73.74	-27.88	490.62	208.16	209.15	489.62	-16.76
102	56	192	26.76	329.88	-20.80	14.69	294.40	105.76	21.05	-638.30	-34.86	-582.38	-183.69
		234	4.41	45.44	-14.95	24.25	6.23	-28.82	51.40	-143.83	49.76	-142.19	-17.82
		232	15.09	240.70	-43.14	-35.38	232.94	46.29	98.00	-66.47	-64.95	96.47	-15.77
		191	10.19	78.52	-22.90	-14.38	70.01	-28.13	485.78	207.63	208.41	484.99	-14.76
102	85	192	26.68	327.59	-21.04	14.56	291.99	105.56	20.63	-640.04	-34.33	-585.09	-182.45
		234	4.49	44.61	-16.58	24.14	3.89	-28.87	50.70	-146.82	49.29	-145.41	-16.65
		232	14.92	238.56	-42.62	-34.79	230.73	46.26	94.96	-67.32	-65.49	93.13	-17.13
		191	10.04	76.59	-22.66	-13.81	67.74	-28.29	482.84	207.29	207.95	482.18	-13.51
102	87	192	60.67	793.76	-53.37	16.84	723.55	233.55	179.18	-1232.85	-56.27	-997.40	-526.33
		234	10.61	194.64	21.98	65.70	150.92	-75.08	102.07	-143.99	98.88	-140.80	-27.87
		232	38.77	571.66	-110.13	-90.93	552.46	112.80	461.71	-154.50	-139.43	446.63	-95.20
		191	31.67	346.86	-49.77	-17.82	314.91	-107.94	1146.70	417.14	419.53	1144.31	41.72
102	97	192	58.25	759.09	-50.82	17.18	691.09	224.61	164.39	-1195.14	-53.31	-977.43	-498.58
		234	9.94	179.84	18.87	62.42	136.28	-71.51	98.89	-149.42	95.76	-146.29	-27.68
		232	36.92	547.07	-104.94	-86.59	528.72	107.83	427.63	-147.98	-134.46	414.11	-87.18
		191	29.85	322.57	-47.90	-17.95	292.62	-100.98	1098.18	407.71	409.57	1096.31	35.84
102	102	192	26.68	327.59	-21.04	14.56	291.99	105.56	20.63	-640.04	-34.33	-585.09	-182.45
		234	4.49	44.61	-16.58	24.14	3.89	-28.87	50.70	-146.82	49.29	-145.41	-16.65
		232	14.92	238.56	-42.62	-34.79	230.73	46.26	94.96	-67.32	-65.49	93.13	-17.13
		191	10.04	76.59	-22.66	-13.81	67.74	-28.29	482.84	207.29	207.95	482.18	-13.51
103	2	196	73.23	772.90	42.11	97.61	717.40	193.60	172.02	-2295.69	53.33	-2177.00	-528.01
		235	20.57	-7.67	-111.46	-8.66	-110.47	-10.05	45.31	-989.67	36.71	-981.08	-93.92
		234	47.68	689.51	-9.67	-9.35	689.19	14.87	1.90	-882.82	-21.59	-859.34	-142.21
		192	22.31	75.97	-217.13	-94.52	-46.64	144.58	618.07	-81.28	138.24	398.56	-324.55

Elem.	Cmb	Nodo	Von Mises	N max	N min	N 1	N 2	N 1-2	M max	M min	M 1	M 2	M 1-2
103	28	196	22.34	201.54	12.09	35.06	178.57	61.84	30.56	-847.99	13.87	-831.30	-119.93
		235	11.37	-5.29	-101.65	-5.29	-101.65	0.56	20.77	-419.43	18.19	-416.85	-33.62
		234	14.78	180.80	-0.10	-0.04	180.74	3.36	-11.62	-388.63	-12.85	-387.40	-21.48
		192	9.42	4.28	-125.84	-33.11	-88.44	58.89	183.10	-56.54	66.66	59.90	-119.77
103	60	196	22.23	199.01	11.92	35.00	175.93	61.52	29.12	-851.02	12.88	-834.78	-118.43
		235	11.56	-5.38	-104.51	-5.39	-104.51	0.27	19.64	-423.26	17.31	-420.93	-32.05
		234	14.70	177.95	-0.03	0.02	177.90	2.92	-10.95	-392.53	-11.97	-391.51	-19.69
		192	9.38	3.18	-127.26	-33.03	-91.06	58.41	180.22	-56.16	67.65	56.40	-118.05
103	85	196	22.17	197.47	11.82	34.96	174.32	61.33	28.23	-852.85	12.28	-836.91	-117.47
		235	11.68	-5.44	-106.25	-5.44	-106.25	0.10	18.96	-425.60	16.78	-423.42	-31.04
		234	14.65	176.21	7.77e-03	0.05	176.17	2.65	-10.53	-394.91	-11.43	-394.01	-18.55
		192	9.35	2.53	-128.15	-32.97	-92.65	58.13	178.43	-55.91	68.26	54.27	-116.96
103	87	196	51.77	541.44	29.80	69.74	501.51	137.24	117.63	-1643.36	37.19	-1562.92	-367.67
		235	15.26	-5.95	-88.36	-6.50	-87.82	-6.69	32.71	-716.50	26.71	-710.51	-66.75
		234	33.74	483.17	-6.44	-6.23	482.95	10.27	-0.76	-640.58	-15.91	-625.43	-97.28
		192	16.09	49.40	-160.25	-67.41	-43.44	104.14	434.43	-60.23	101.26	272.94	-231.96
103	97	196	49.63	514.12	28.59	67.54	475.16	131.90	110.97	-1594.65	37.14	-1520.83	-347.09
		235	15.33	-6.18	-94.02	-6.59	-93.61	-6.00	32.10	-703.23	26.35	-697.49	-64.72
		234	32.36	458.88	-5.79	-5.60	458.68	9.60	-2.81	-629.95	-15.92	-616.85	-89.70
		192	15.74	43.40	-160.38	-65.18	-51.80	101.67	415.01	-58.99	102.63	253.38	-224.69
103	102	196	22.17	197.47	11.82	34.96	174.32	61.33	28.23	-852.85	12.28	-836.91	-117.47
		235	11.68	-5.44	-106.25	-5.44	-106.25	0.10	18.96	-425.60	16.78	-423.42	-31.04
		234	14.65	176.21	7.77e-03	0.05	176.17	2.65	-10.53	-394.91	-11.43	-394.01	-18.55
		192	9.35	2.53	-128.15	-32.97	-92.65	58.13	178.43	-55.91	68.26	54.27	-116.96
104	2	200	62.73	438.89	32.18	103.28	367.79	154.47	92.52	-2844.05	37.04	-2788.56	-399.81
		236	44.01	-38.69	-390.66	-38.82	-390.53	6.75	51.49	-1677.51	43.51	-1669.52	-117.22
		235	43.93	394.27	33.30	33.63	393.94	-10.93	-25.52	-1687.03	-30.05	-1682.50	-86.60
		196	28.73	-3.96	-471.26	-98.88	-376.33	188.01	379.42	-646.17	185.23	-451.98	-401.80
104	21	200	18.10	87.41	-4.63	34.42	48.36	45.49	16.19	-1033.55	10.76	-1028.12	-75.35
		236	19.53	-13.40	-196.35	-13.52	-196.24	4.54	17.26	-663.75	15.59	-662.08	-33.65
		235	12.97	66.20	11.62	12.19	65.63	-5.54	-10.24	-669.69	-10.25	-669.69	-0.62
		196	13.69	-8.30	-221.35	-31.95	-197.70	66.93	122.13	-296.84	78.09	-252.80	-128.49
104	53	200	18.16	88.82	-4.30	34.50	50.02	45.91	17.38	-1030.67	11.74	-1025.02	-76.73
		236	19.41	-13.31	-194.79	-13.44	-194.66	4.90	18.31	-660.39	16.49	-658.57	-35.10
		235	12.99	67.66	11.50	11.99	67.16	-5.24	-11.34	-666.23	-11.35	-666.22	-2.08
		196	13.55	-8.06	-220.16	-32.13	-196.08	67.29	122.28	-295.12	76.91	-249.75	-129.92
104	85	200	18.20	89.68	-4.10	34.56	51.03	46.16	18.11	-1028.91	12.33	-1023.13	-77.61
		236	19.33	-13.26	-193.85	-13.40	-193.70	5.12	18.95	-658.35	17.03	-656.43	-36.02
		235	13.00	68.55	11.42	11.87	68.09	-5.06	-12.00	-664.12	-12.01	-664.11	-3.01
		196	13.47	-7.91	-219.44	-32.25	-195.10	67.50	122.41	-294.12	76.19	-247.89	-130.84
104	87	200	44.24	303.73	21.73	73.46	252.00	109.14	63.57	-2032.69	26.33	-1995.46	-276.89
		236	31.92	-27.56	-286.28	-27.66	-286.18	5.18	36.84	-1206.10	31.28	-1200.54	-82.95
		235	31.02	271.96	23.75	24.00	271.71	-7.96	-18.80	-1213.05	-21.63	-1210.22	-58.14
		196	20.55	-4.07	-343.05	-70.22	-276.90	134.34	268.64	-469.37	133.65	-334.37	-285.31
104	97	200	42.31	284.81	19.77	70.84	233.74	104.53	61.21	-1969.37	27.39	-1935.55	-259.86
		236	31.37	-26.62	-284.19	-26.73	-284.08	5.36	35.77	-1175.71	30.47	-1170.41	-80.00
		235	29.69	254.07	22.96	23.23	253.80	-7.86	-18.74	-1182.51	-21.10	-1180.15	-52.37
		196	19.94	-5.08	-338.44	-67.61	-275.91	130.13	259.63	-461.62	132.62	-334.60	-274.73
104	102	200	18.20	89.68	-4.10	34.56	51.03	46.16	18.11	-1028.91	12.33	-1023.13	-77.61
		236	19.33	-13.26	-193.85	-13.40	-193.70	5.12	18.95	-658.35	17.03	-656.43	-36.02
		235	13.00	68.55	11.42	11.87	68.09	-5.06	-12.00	-664.12	-12.01	-664.11	-3.01
		196	13.47	-7.91	-219.44	-32.25	-195.10	67.50	122.41	-294.12	76.19	-247.89	-130.84
105	2	204	53.20	204.19	-70.93	96.43	36.83	134.29	66.14	-3330.38	36.38	-3300.62	-316.54
		237	65.65	-42.45	-639.20	-42.59	-639.06	9.23	52.75	-2297.69	45.55	-2290.49	-129.88
		236	37.72	85.28	36.80	41.43	80.65	-14.25	-35.19	-2329.94	-36.42	-2328.72	-52.99
		200	49.74	-37.36	-697.91	-92.07	-643.19	182.07	324.87	-1316.87	210.67	-1202.66	-417.68
105	31	204	21.70	43.54	-75.66	30.51	-62.62	37.20	15.21	-1173.82	13.04	-1171.65	-50.70
		237	26.08	-13.35	-267.31	-13.54	-267.12	6.92	17.19	-864.54	15.33	-862.68	-40.43
		236	15.40	13.41	-41.86	12.66	-41.10	-6.41	-13.93	-875.17	-13.95	-875.15	4.34
		200	21.38	-13.19	-289.38	-28.30	-274.27	62.81	104.74	-540.31	77.24	-512.82	-130.30
105	63	204	21.62	43.18	-74.54	30.43	-61.79	36.59	15.89	-1171.12	13.85	-1169.07	-49.21
		237	25.99	-13.33	-266.19	-13.49	-266.03	6.37	17.77	-861.38	16.05	-859.66	-38.88
		236	15.32	13.68	-40.72	12.94	-39.98	-6.28	-12.92	-872.24	-12.96	-872.20	5.80
		200	21.31	-13.08	-288.50	-28.14	-273.45	62.60	105.30	-537.30	78.32	-510.31	-128.89
105	85	204	21.58	42.96	-73.86	30.38	-61.28	36.22	16.31	-1169.46	14.34	-1167.49	-48.27
		237	25.93	-13.31	-265.51	-13.46	-265.37	6.03	18.12	-859.45	16.48	-857.81	-37.90
		236	15.27	13.84	-40.02	13.11	-39.30	-6.20	-12.31	-870.45	-12.36	-870.40	6.73
		200	21.27	-13.02	-287.96	-28.04	-272.94	62.48	105.63	-535.44	78.97	-508.78	-127.99
105	87	204	37.39	140.23	-55.51	68.34	16.38	94.36	45.85	-2375.76	26.16	-2356.08	-217.46
		237	47.22	-30.07	-461.54	-30.19	-461.42	6.96	37.57	-1646.37	32.57	-1641.37	-91.64
		236	26.57	53.03	24.86	29.37	48.53	-10.33	-25.20	-1669.25	-25.93	-1668.53	-34.43
		200	35.99	-26.75	-503.56	-65.12	-465.19	129.71	230.37	-949.00	150.97	-869.61	-295.52
105	97	204	35.96	130.64	-58.65	65.66	6.33	89.88	45.10	-2297.45	27.49	-2279.85	-202.32
		237	46.05	-28.89	-451.71	-29.01	-451.60	7.08	36.31	-1599.44	31.56	-1594.68	-88.08
		236	25.38	44.56	21.93	28.23	38.26	-10.14	-24.46	-1621.40	-25.01	-1620.85	-29.68

Elem.	Cmb	Nodo	Von Mises	N max	N min	N 1	N 2	N 1-2	M max	M min	M 1	M 2	M 1-2
		200	35.31	-25.95	-492.51	-62.44	-456.01	125.28	223.36	-926.74	148.61	-851.99	-283.53
105	102	204	21.58	42.96	-73.86	30.38	-61.28	36.22	16.31	-1169.46	14.34	-1167.49	-48.27
		237	25.93	-13.31	-265.51	-13.46	-265.37	6.03	18.12	-859.45	16.48	-857.81	-37.90
		236	15.27	13.84	-40.02	13.11	-39.30	-6.20	-12.31	-870.45	-12.36	-870.40	6.73
		200	21.27	-13.02	-287.96	-28.04	-272.94	62.48	105.63	-535.44	78.97	-508.78	-127.99
106	2	208	72.28	122.73	-300.56	87.24	-265.07	117.31	61.94	-3768.87	45.40	-3752.32	-251.20
		238	85.24	-39.46	-861.41	-39.57	-861.30	9.38	49.46	-2859.38	42.81	-2852.73	-138.94
		237	54.81	40.15	-215.68	39.37	-214.89	-14.17	-35.89	-2886.92	-36.21	-2886.60	-30.16
		204	71.43	-48.60	-907.79	-82.79	-873.60	167.93	297.26	-1954.73	215.89	-1873.35	-420.27
106	31	208	28.12	29.64	-165.57	25.51	-161.44	28.08	18.53	-1280.05	17.99	-1279.51	-26.62
		238	31.57	-11.47	-326.08	-11.64	-325.91	7.26	15.61	-1031.84	13.99	-1030.23	-41.09
		237	22.77	11.17	-139.55	10.89	-139.27	-6.48	-12.10	-1041.42	-12.21	-1041.31	10.86
		204	27.87	-13.86	-344.57	-23.17	-335.26	54.71	93.40	-756.88	75.34	-738.81	-122.62
106	63	208	28.03	29.38	-164.05	25.42	-160.08	27.41	18.92	-1278.17	18.43	-1277.68	-25.05
		238	31.43	-11.40	-323.84	-11.54	-323.70	6.63	15.87	-1029.61	14.38	-1028.12	-39.41
		237	22.64	11.49	-137.29	11.21	-137.01	-6.41	-11.24	-1039.44	-11.39	-1039.29	12.48
		204	27.79	-13.64	-343.24	-23.03	-333.86	54.81	93.85	-754.72	76.20	-737.07	-121.10
106	85	208	27.97	29.23	-163.12	25.37	-159.25	26.99	19.15	-1277.00	18.71	-1276.55	-24.08
		238	31.35	-11.35	-322.47	-11.48	-322.35	6.25	16.03	-1028.23	14.62	-1026.82	-38.37
		237	22.56	11.68	-135.91	11.40	-135.64	-6.36	-10.72	-1038.21	-10.89	-1038.03	13.49
		204	27.74	-13.51	-342.43	-22.94	-333.01	54.88	94.12	-753.38	76.73	-735.99	-120.15
106	87	208	51.92	85.18	-221.59	61.54	-197.95	81.81	43.49	-2682.49	32.76	-2671.76	-170.68
		238	61.01	-27.82	-617.26	-27.91	-617.18	7.09	35.10	-2043.33	30.49	-2038.73	-97.74
		237	39.54	28.32	-161.91	27.76	-161.35	-10.29	-25.43	-2062.97	-25.59	-2062.80	-18.31
		204	51.32	-34.24	-650.81	-58.25	-626.80	119.27	210.48	-1403.36	154.15	-1347.03	-296.20
106	97	208	50.56	80.20	-221.30	58.86	-199.96	77.32	43.40	-2588.26	34.01	-2578.88	-156.88
		238	59.20	-26.59	-599.66	-26.69	-599.57	7.23	33.80	-1979.77	29.44	-1975.41	-93.63
		237	38.68	27.08	-164.33	26.55	-163.79	-10.13	-24.42	-1998.71	-24.52	-1998.61	-14.23
		204	49.99	-32.70	-632.54	-55.56	-609.68	114.85	204.01	-1365.55	151.19	-1312.73	-283.06
106	102	208	27.97	29.23	-163.12	25.37	-159.25	26.99	19.15	-1277.00	18.71	-1276.55	-24.08
		238	31.35	-11.35	-322.47	-11.48	-322.35	6.25	16.03	-1028.23	14.62	-1026.82	-38.37
		237	22.56	11.68	-135.91	11.40	-135.64	-6.36	-10.72	-1038.21	-10.89	-1038.03	13.49
		204	27.74	-13.51	-342.43	-22.94	-333.01	54.88	94.12	-753.38	76.73	-735.99	-120.15
107	2	194	91.58	93.64	-553.14	77.70	-537.19	100.30	72.55	-4149.88	64.16	-4141.49	-188.04
		239	102.60	-35.03	-1056.90	-35.11	-1056.81	9.33	42.21	-3361.24	35.80	-3354.82	-147.61
		238	75.68	35.43	-485.53	35.06	-485.16	-13.90	-30.28	-3383.14	-30.32	-3383.10	-11.53
		208	90.71	-50.28	-1097.48	-72.98	-1074.78	152.50	267.12	-2549.17	201.59	-2483.64	-424.58
107	31	194	33.33	21.62	-246.87	20.28	-245.53	18.91	23.90	-1354.07	23.88	-1354.05	-5.13
		239	35.83	-9.13	-369.88	-9.28	-369.73	7.39	13.02	-1166.90	11.63	-1165.51	-40.52
		238	28.94	8.66	-223.92	8.47	-223.73	-6.64	-9.15	-1174.38	-9.36	-1174.16	15.92
		208	33.13	-11.96	-386.49	-17.78	-380.67	46.33	83.32	-945.16	70.91	-932.75	-112.29
107	63	194	33.20	21.45	-244.58	20.20	-243.32	18.20	24.21	-1352.61	24.20	-1352.60	-3.63
		239	35.64	-9.00	-366.54	-9.13	-366.41	6.74	13.21	-1165.19	11.92	-1163.91	-38.89
		238	28.76	8.99	-220.56	8.80	-220.37	-6.48	-8.58	-1172.83	-8.84	-1172.56	17.59
		208	33.01	-11.78	-384.31	-17.67	-378.42	46.47	83.53	-943.38	71.44	-931.30	-110.74
107	85	194	33.11	21.34	-243.18	20.14	-241.98	17.77	24.40	-1351.69	24.39	-1351.69	-2.70
		239	35.53	-8.92	-364.50	-9.03	-364.39	6.34	13.33	-1164.12	12.11	-1162.90	-37.88
		238	28.65	9.18	-218.51	9.01	-218.33	-6.38	-8.23	-1171.84	-8.53	-1171.55	18.62
		208	32.93	-11.67	-382.99	-17.60	-377.06	46.56	83.65	-942.26	71.76	-930.38	-109.79
107	87	194	65.47	65.01	-400.92	54.48	-390.39	69.24	51.31	-2946.50	46.03	-2941.22	-125.72
		239	73.14	-24.54	-753.20	-24.61	-753.13	7.07	29.90	-2396.02	25.48	-2391.60	-103.45
		238	54.27	24.84	-352.82	24.57	-352.55	-10.12	-21.34	-2411.61	-21.35	-2411.60	-5.20
		208	64.86	-35.10	-782.70	-51.00	-766.79	107.87	188.97	-1824.82	143.96	-1779.81	-297.69
107	97	194	63.46	61.19	-393.88	51.79	-384.48	64.74	51.20	-2836.14	46.73	-2831.67	-113.49
		239	70.69	-23.31	-727.75	-23.39	-727.67	7.23	28.75	-2315.77	24.59	-2311.61	-98.70
		238	52.76	23.61	-347.45	23.35	-347.18	-9.98	-20.38	-2330.79	-20.38	-2330.79	-1.73
		208	62.89	-33.20	-756.81	-48.31	-741.70	103.45	183.22	-1770.68	141.35	-1728.80	-282.96
107	102	194	33.11	21.34	-243.18	20.14	-241.98	17.77	24.40	-1351.69	24.39	-1351.69	-2.70
		239	35.53	-8.92	-364.50	-9.03	-364.39	6.34	13.33	-1164.12	12.11	-1162.90	-37.88
		238	28.65	9.18	-218.51	9.01	-218.33	-6.38	-8.23	-1171.84	-8.53	-1171.55	18.62
		208	32.93	-11.67	-382.99	-17.60	-377.06	46.56	83.65	-942.26	71.76	-930.38	-109.79
108	2	199	108.53	75.98	-787.46	67.84	-779.31	83.46	90.03	-4473.84	87.05	-4470.86	-116.57
		240	117.69	-30.07	-1224.82	-30.14	-1224.75	9.24	33.13	-3803.60	26.73	-3797.21	-156.49
		239	94.29	30.48	-728.37	30.23	-728.12	-13.68	-21.63	-3818.86	-21.64	-3818.85	7.97
		194	107.59	-47.66	-1262.79	-63.13	-1247.32	136.26	233.98	-3089.50	176.24	-3031.75	-434.25
108	31	199	37.26	15.24	-314.06	14.96	-313.78	9.59	29.99	-1396.27	29.83	-1396.11	15.00
		240	38.82	-6.67	-397.97	-6.81	-397.83	7.42	9.60	-1270.20	8.42	-1269.02	-38.85
		239	33.89	6.08	-293.30	5.93	-293.15	-6.81	-5.81	-1275.48	-6.13	-1275.15	20.40
		194	37.12	-8.83	-413.67	-12.32	-410.18	37.43	73.61	-1103.43	65.07	-1094.88	-99.92
108	63	199	37.09	15.12	-311.09	14.88	-310.85	8.90	30.59	-1394.41	30.41	-1394.23	16.23
		240	38.59	-6.49	-393.73	-6.61	-393.62	6.77	10.06	-1268.02	8.96	-1266.91	-37.50
		239	33.65	6.40	-289.05	6.26	-288.91	-6.55	-5.52	-1273.35	-5.90	-1272.97	21.91
		194	36.95	-8.68	-410.78	-12.24	-407.22	37.67	73.62	-1101.25	65.30	-1092.93	-98.53
108	85	199	36.98	15.05	-309.29	14.83	-309.07	8.48	30.96	-1393.26	30.76	-1393.06	16.99
		240	38.45	-6.38	-391.16	-6.49	-391.05	6.37	10.34	-1266.66	9.28	-1265.60	-36.67

Elem.	Cmb	Nodo	Von Mises	N max	N min	N 1	N 2	N 1-2	M max	M min	M 1	M 2	M 1-2
		239	33.51	6.59	-286.46	6.46	-286.33	-6.38	-5.34	-1272.03	-5.75	-1271.61	22.83
		194	36.84	-8.59	-409.03	-12.20	-405.42	37.82	73.63	-1099.90	65.44	-1091.71	-97.68
108	87	199	77.29	52.46	-566.01	47.20	-560.75	56.77	63.90	-3168.08	62.14	-3166.31	-75.45
		240	83.59	-20.90	-868.70	-20.96	-868.64	7.01	23.44	-2704.60	19.06	-2700.22	-109.22
		239	67.33	21.20	-523.77	21.01	-523.59	-9.97	-15.17	-2715.47	-15.20	-2715.45	8.36
		194	76.64	-32.93	-896.38	-43.72	-885.60	95.88	165.46	-2205.97	126.22	-2166.73	-302.52
108	97	199	74.63	49.09	-551.55	44.51	-546.97	52.26	63.48	-3041.30	62.10	-3039.92	-65.54
		240	80.49	-19.68	-835.35	-19.75	-835.28	7.18	22.52	-2607.50	18.42	-2603.41	-103.71
		239	65.18	19.98	-510.60	19.80	-510.42	-9.85	-14.42	-2617.98	-14.46	-2617.93	11.06
		194	74.02	-30.83	-862.69	-41.01	-852.51	91.47	160.63	-2135.20	124.52	-2099.09	-285.64
108	102	199	36.98	15.05	-309.29	14.83	-309.07	8.48	30.96	-1393.26	30.76	-1393.06	16.99
		240	38.45	-6.38	-391.16	-6.49	-391.05	6.37	10.34	-1266.66	9.28	-1265.60	-36.67
		239	33.51	6.59	-286.46	6.46	-286.33	-6.38	-5.34	-1272.03	-5.75	-1271.61	22.83
		194	36.84	-8.59	-409.03	-12.20	-405.42	37.82	73.63	-1099.90	65.44	-1091.71	-97.68
109	2	205	123.24	61.75	-996.97	57.60	-992.83	66.12	109.44	-4745.42	109.28	-4745.25	-28.52
		241	130.58	-23.87	-1364.85	-23.94	-1364.78	9.67	23.35	-4190.51	16.86	-4184.01	-165.36
		240	110.61	24.75	-943.06	24.56	-942.86	-13.79	-11.34	-4195.82	-11.59	-4195.58	31.82
		199	122.11	-42.39	-1402.40	-53.15	-1391.65	120.46	199.36	-3572.20	144.83	-3517.67	-450.21
109	31	205	39.89	9.56	-365.80	9.56	-365.80	0.15	37.05	-1405.33	36.23	-1404.52	34.20
		241	40.50	-4.16	-409.84	-4.29	-409.71	7.37	6.16	-1340.09	5.18	-1339.12	-36.23
		240	37.54	3.51	-346.89	3.37	-346.75	-6.97	-2.84	-1343.19	-3.29	-1342.73	24.69
		199	39.80	-4.92	-425.48	-6.83	-423.58	28.23	63.66	-1229.37	57.95	-1223.66	-85.73
109	63	205	39.68	9.50	-362.38	9.50	-362.38	-0.49	37.86	-1402.93	37.01	-1402.08	34.99
		241	40.23	-3.94	-405.01	-4.05	-404.90	6.76	6.82	-1337.26	5.89	-1336.32	-35.37
		240	37.26	3.81	-342.05	3.68	-341.93	-6.61	-2.48	-1340.38	-2.98	-1339.88	25.79
		199	39.60	-4.83	-422.10	-6.79	-420.13	28.57	63.90	-1226.75	58.31	-1221.17	-84.70
109	85	205	39.56	9.47	-360.29	9.47	-360.29	-0.87	38.35	-1401.46	37.48	-1400.58	35.46
		241	40.07	-3.81	-402.08	-3.91	-401.98	6.38	7.22	-1335.51	6.32	-1334.61	-34.84
		240	37.10	3.99	-339.11	3.87	-339.00	-6.39	-2.27	-1338.65	-2.79	-1338.13	26.46
		199	39.47	-4.77	-420.05	-6.77	-418.04	28.78	64.04	-1225.14	58.53	-1219.63	-84.07
109	87	205	87.44	42.24	-712.49	39.67	-709.92	43.96	77.91	-3350.30	77.85	-3350.24	-14.29
		241	92.39	-16.43	-963.51	-16.48	-963.45	7.29	16.50	-2971.71	12.08	-2967.29	-114.89
		240	78.69	17.03	-673.92	16.89	-673.77	-10.05	-7.89	-2975.68	-8.10	-2975.47	24.74
		199	86.67	-28.92	-990.92	-36.34	-983.50	84.15	140.95	-2544.33	104.36	-2507.73	-311.35
109	97	205	84.11	39.13	-690.37	36.99	-688.24	39.45	77.18	-3206.50	77.16	-3206.48	-7.97
		241	88.64	-15.31	-922.17	-15.37	-922.11	7.44	15.84	-2857.31	11.74	-2853.20	-108.56
		240	75.89	15.87	-652.93	15.73	-652.79	-9.91	-7.43	-2861.29	-7.67	-2861.05	26.31
		199	83.41	-26.70	-949.28	-33.63	-942.35	79.67	137.13	-2456.72	103.90	-2423.49	-291.71
109	102	205	39.56	9.47	-360.29	9.47	-360.29	-0.87	38.35	-1401.46	37.48	-1400.58	35.46
		241	40.07	-3.81	-402.08	-3.91	-401.98	6.38	7.22	-1335.51	6.32	-1334.61	-34.84
		240	37.10	3.99	-339.11	3.87	-339.00	-6.39	-2.27	-1338.65	-2.79	-1338.13	26.46
		199	39.47	-4.77	-420.05	-6.77	-418.04	28.78	64.04	-1225.14	58.53	-1219.63	-84.07
110	2	210	136.08	47.80	-1184.78	46.39	-1183.37	41.66	125.75	-4978.12	124.31	-4976.68	85.92
		242	141.37	-14.39	-1472.70	-14.52	-1472.57	13.54	14.76	-4540.17	8.02	-4533.44	-175.04
		241	124.68	16.40	-1130.90	16.17	-1130.67	-16.21	-0.88	-4517.58	-1.77	-4516.69	63.54
		205	134.40	-33.72	-1515.50	-41.71	-1507.51	108.54	168.57	-3998.68	114.76	-3944.87	-470.48
110	31	210	41.18	4.33	-401.60	4.12	-401.38	-9.36	45.00	-1380.49	43.07	-1378.56	52.42
		242	40.85	-1.63	-405.21	-1.76	-405.08	7.25	2.86	-1375.58	2.07	-1374.80	-32.95
		241	39.86	0.96	-384.20	0.82	-384.07	-7.12	-0.06	-1376.59	-0.67	-1375.98	28.81
		205	41.16	-0.47	-421.48	-1.32	-420.63	18.85	53.97	-1321.81	50.41	-1318.25	-69.94
110	63	210	40.97	4.33	-397.99	4.09	-397.75	-9.91	45.86	-1377.80	43.91	-1375.84	52.68
		242	40.56	-1.37	-400.14	-1.48	-400.03	6.71	3.60	-1372.42	2.83	-1371.65	-32.67
		241	39.57	1.22	-379.13	1.11	-379.02	-6.66	0.53	-1373.44	-0.10	-1372.82	29.35
		205	40.94	-0.44	-417.89	-1.34	-416.99	19.29	54.57	-1319.04	51.05	-1315.52	-69.43
110	85	210	40.83	4.34	-395.80	4.07	-395.54	-10.24	46.38	-1376.15	44.41	-1374.18	52.84
		242	40.39	-1.22	-397.06	-1.32	-396.96	6.39	4.05	-1370.49	3.29	-1369.72	-32.50
		241	39.39	1.38	-376.05	1.28	-375.94	-6.39	0.89	-1371.52	0.24	-1370.88	29.68
		205	40.80	-0.42	-415.70	-1.35	-414.78	19.56	54.93	-1317.34	51.44	-1313.85	-69.11
110	87	210	96.17	32.27	-842.45	31.47	-841.65	26.41	89.95	-3502.16	88.79	-3501.01	64.32
		242	99.63	-9.76	-1034.74	-9.85	-1034.64	9.88	10.34	-3209.48	5.79	-3204.92	-121.03
		241	88.37	11.12	-804.07	10.95	-803.90	-11.66	-0.48	-3194.58	-1.15	-3193.91	46.32
		205	95.04	-22.57	-1065.73	-27.99	-1060.31	74.97	119.01	-2840.74	83.36	-2805.09	-322.87
110	97	210	92.14	29.48	-812.21	28.88	-811.61	22.37	89.20	-3339.80	87.96	-3338.56	65.17
		242	95.19	-8.95	-985.59	-9.05	-985.49	9.76	9.86	-3076.07	5.66	-3071.87	-113.76
		241	84.92	10.19	-775.12	10.03	-774.96	-11.37	-0.30	-3062.82	-1.00	-3062.12	46.16
		205	91.12	-20.40	-1016.00	-25.37	-1011.03	70.14	115.96	-2735.91	84.04	-2703.99	-300.02
110	102	210	40.83	4.34	-395.80	4.07	-395.54	-10.24	46.38	-1376.15	44.41	-1374.18	52.84
		242	40.39	-1.22	-397.06	-1.32	-396.96	6.39	4.05	-1370.49	3.29	-1369.72	-32.50
		241	39.39	1.38	-376.05	1.28	-375.94	-6.39	0.89	-1371.52	0.24	-1370.88	29.68
		205	40.80	-0.42	-415.70	-1.35	-414.78	19.56	54.93	-1317.34	51.44	-1313.85	-69.11
111	2	198	148.58	31.93	-1384.09	31.65	-1383.82	-19.73	48.70	-5229.95	33.98	-5215.23	278.33
		243	149.70	-3.70	-1507.60	-4.20	-1507.10	27.26	35.10	-4954.01	28.92	-4947.82	-175.50
		242	136.93	4.71	-1300.12	4.08	-1299.48	-28.76	-7.30	-4797.91	-9.91	-4795.30	111.76
		210	144.56	-12.41	-1590.66	-20.11	-1582.96	109.96	174.35	-4386.75	119.29	-4331.69	-498.11
111	24	198	41.15	-0.47	-421.46	-1.32	-420.62	-18.85	53.99	-1321.80	50.43	-1318.24	69.91

Elem.	Cmb	Nodo	Von Mises	N max	N min	N 1	N 2	N 1-2	M max	M min	M 1	M 2	M 1-2
		243	39.86	0.96	-384.20	0.82	-384.07	7.12	-0.08	-1376.58	-0.68	-1375.98	-28.84
		242	40.85	-1.62	-405.21	-1.76	-405.08	-7.25	2.87	-1375.58	2.08	-1374.80	32.93
		210	41.18	4.33	-401.60	4.12	-401.39	9.36	44.96	-1380.49	43.03	-1378.56	-52.48
111	56	198	40.94	-0.44	-417.87	-1.33	-416.98	-19.30	54.60	-1319.03	51.08	-1315.51	69.39
		243	39.57	1.22	-379.13	1.10	-379.01	6.66	0.52	-1373.44	-0.11	-1372.81	-29.38
		242	40.56	-1.37	-400.14	-1.48	-400.03	-6.71	3.61	-1372.42	2.84	-1371.65	32.65
		210	40.97	4.33	-398.00	4.09	-397.75	9.90	45.83	-1377.80	43.87	-1375.85	-52.74
111	85	198	40.80	-0.42	-415.69	-1.34	-414.77	-19.57	54.96	-1317.33	51.47	-1313.84	69.08
		243	39.39	1.38	-376.05	1.28	-375.94	6.39	0.88	-1371.52	0.23	-1370.87	-29.70
		242	40.39	-1.21	-397.06	-1.32	-396.96	-6.39	4.06	-1370.49	3.30	-1369.72	32.48
		210	40.83	4.33	-395.80	4.07	-395.54	10.24	46.35	-1376.16	44.38	-1374.19	-52.90
111	87	198	104.49	21.17	-978.10	20.92	-977.85	-15.76	39.79	-3662.28	29.52	-3652.00	194.76
		243	105.05	-2.28	-1055.21	-2.63	-1054.86	19.03	23.49	-3485.51	19.31	-3481.33	-120.96
		242	96.67	2.98	-919.68	2.54	-919.25	-20.02	-4.32	-3381.34	-6.17	-3379.50	78.84
		210	101.82	-7.80	-1113.11	-12.86	-1108.05	74.67	121.47	-3107.04	85.44	-3071.02	-339.13
111	97	198	99.63	18.94	-937.12	18.64	-936.82	-16.86	45.31	-3475.92	35.58	-3466.19	184.79
		243	99.94	-1.87	-1001.14	-2.19	-1000.81	18.00	21.26	-3324.64	17.41	-3320.80	-113.32
		242	92.53	2.51	-882.04	2.11	-881.64	-18.89	-3.32	-3230.77	-5.10	-3228.99	75.82
		210	97.23	-6.52	-1055.86	-11.02	-1051.36	68.60	116.75	-2983.39	84.94	-2951.58	-312.43
111	102	198	40.80	-0.42	-415.69	-1.34	-414.77	-19.57	54.96	-1317.33	51.47	-1313.84	69.08
		243	39.39	1.38	-376.05	1.28	-375.94	6.39	0.88	-1371.52	0.23	-1370.87	-29.70
		242	40.39	-1.21	-397.06	-1.32	-396.96	-6.39	4.06	-1370.49	3.30	-1369.72	32.48
		210	40.83	4.33	-395.80	4.07	-395.54	10.24	46.35	-1376.16	44.38	-1374.19	-52.90
112	2	206	152.74	12.54	-1566.92	6.05	-1560.43	-101.05	119.16	-4975.30	74.67	-4930.81	474.00
		244	147.74	7.21	-1425.93	6.10	-1424.82	39.84	8.26	-5094.41	2.41	-5088.56	-172.62
		243	148.21	-6.86	-1449.36	-8.11	-1448.11	-42.46	33.87	-5056.76	29.27	-5052.16	153.03
		198	151.80	17.76	-1550.08	12.43	-1544.75	91.25	43.90	-4995.04	-4.18	-4946.96	-489.85
112	24	206	39.80	-4.92	-425.46	-6.83	-423.56	-28.23	63.67	-1229.36	57.96	-1223.65	85.73
		244	37.54	3.51	-346.88	3.37	-346.74	6.97	-2.85	-1343.18	-3.31	-1342.72	-24.72
		243	40.50	-4.16	-409.83	-4.29	-409.70	-7.37	6.16	-1340.09	5.18	-1339.11	36.22
		198	39.89	9.56	-365.80	9.56	-365.80	-0.15	37.01	-1405.32	36.19	-1404.51	-34.29
112	56	206	39.59	-4.83	-422.08	-6.79	-420.11	-28.58	63.92	-1226.74	58.33	-1221.15	84.70
		244	37.26	3.81	-342.05	3.68	-341.92	6.61	-2.49	-1340.37	-2.99	-1339.87	-25.82
		243	40.23	-3.94	-405.01	-4.05	-404.89	-6.76	6.83	-1337.25	5.90	-1336.32	35.36
		198	39.68	9.50	-362.37	9.50	-362.37	0.48	37.83	-1402.93	36.97	-1402.07	-35.07
112	85	206	39.47	-4.77	-420.03	-6.77	-418.02	-28.79	64.06	-1225.13	58.56	-1219.62	84.07
		244	37.10	3.99	-339.11	3.87	-338.99	6.39	-2.27	-1338.64	-2.80	-1338.12	-26.50
		243	40.07	-3.80	-402.07	-3.91	-401.97	-6.38	7.23	-1335.51	6.33	-1334.60	34.84
		198	39.56	9.47	-360.29	9.47	-360.29	0.87	38.32	-1401.45	37.44	-1400.58	-35.55
112	87	206	107.09	7.73	-1100.62	3.13	-1096.02	-71.21	87.85	-3480.09	57.59	-3449.82	327.21
		244	103.44	5.33	-995.83	4.58	-995.08	27.41	5.17	-3574.73	1.24	-3570.79	-118.61
		243	104.15	-5.09	-1019.84	-5.93	-1019.00	-29.16	23.54	-3549.24	20.36	-3546.05	106.67
		198	106.47	12.96	-1081.27	9.55	-1077.87	60.95	33.41	-3515.91	2.21	-3484.72	-331.31
112	97	206	101.79	6.30	-1048.03	1.89	-1043.62	-68.02	89.68	-3299.21	61.81	-3271.34	306.05
		244	98.17	5.34	-942.64	4.65	-941.95	25.54	4.34	-3400.43	0.73	-3396.83	-110.76
		243	99.21	-5.11	-972.87	-5.87	-972.11	-27.11	22.20	-3377.09	19.19	-3374.08	101.19
		198	101.25	12.82	-1022.30	9.89	-1019.38	54.97	36.37	-3354.81	9.08	-3327.51	-303.01
112	102	206	39.47	-4.77	-420.03	-6.77	-418.02	-28.79	64.06	-1225.13	58.56	-1219.62	84.07
		244	37.10	3.99	-339.11	3.87	-338.99	6.39	-2.27	-1338.64	-2.80	-1338.12	-26.50
		243	40.07	-3.80	-402.07	-3.91	-401.97	-6.38	7.23	-1335.51	6.33	-1334.60	34.84
		198	39.56	9.47	-360.29	9.47	-360.29	0.87	38.32	-1401.45	37.44	-1400.58	-35.55
113	2	195	147.68	-12.14	-1656.50	-29.44	-1639.20	-167.76	168.71	-4474.01	83.00	-4388.30	624.97
		245	136.27	20.33	-1226.26	18.93	-1224.85	41.84	-1.54	-4977.44	-5.73	-4973.24	-144.44
		244	150.66	-18.99	-1534.38	-20.39	-1532.98	-46.05	45.56	-4955.72	38.25	-4948.41	191.04
		206	148.09	49.08	-1359.59	48.23	-1358.74	34.66	7.42	-5288.34	-19.27	-5261.65	-375.00
113	24	195	37.12	-8.83	-413.64	-12.32	-410.15	-37.43	73.63	-1103.42	65.08	-1094.87	99.95
		245	33.89	6.08	-293.29	5.93	-293.13	6.81	-5.81	-1275.47	-6.14	-1275.14	-20.43
		244	38.82	-6.67	-397.96	-6.81	-397.82	-7.42	9.60	-1270.20	8.42	-1269.01	38.85
		206	37.26	15.24	-314.05	14.96	-313.77	-9.60	29.95	-1396.25	29.79	-1396.10	-15.09
113	56	195	36.95	-8.68	-410.76	-12.24	-407.19	-37.67	73.64	-1101.24	65.31	-1092.91	98.56
		245	33.65	6.40	-289.04	6.26	-288.89	6.55	-5.52	-1273.33	-5.90	-1272.95	-21.94
		244	38.59	-6.49	-393.72	-6.61	-393.60	-6.77	10.06	-1268.01	8.96	-1266.90	37.50
		206	37.09	15.12	-311.08	14.88	-310.84	-8.90	30.56	-1394.40	30.37	-1394.21	-16.33
113	85	195	36.84	-8.59	-409.00	-12.20	-405.39	-37.82	73.65	-1099.89	65.45	-1091.70	97.71
		245	33.51	6.59	-286.45	6.45	-286.32	6.38	-5.35	-1272.01	-5.76	-1271.60	-22.86
		244	38.45	-6.38	-391.15	-6.48	-391.04	-6.37	10.34	-1266.65	9.29	-1265.59	36.67
		206	36.98	15.05	-309.28	14.83	-309.06	-8.48	30.93	-1393.25	30.72	-1393.04	-17.09
113	87	195	103.36	-9.24	-1158.86	-21.25	-1146.86	-116.88	121.88	-3128.91	64.06	-3071.09	429.68
		245	95.32	14.43	-855.69	13.48	-854.74	28.74	-1.76	-3487.87	-4.59	-3485.04	-99.34
		244	105.56	-13.52	-1075.07	-14.46	-1074.13	-31.55	31.74	-3472.68	26.74	-3467.69	132.25
		206	103.66	34.62	-947.53	34.13	-947.03	21.97	8.44	-3710.70	-8.75	-3693.51	-252.28
113	97	195	98.07	-9.50	-1098.94	-20.80	-1087.64	-110.37	121.35	-2965.74	68.58	-2912.97	400.14
		245	90.37	13.88	-809.31	13.01	-808.44	26.74	-2.31	-3313.16	-4.92	-3310.55	-92.91
		244	100.27	-13.05	-1021.07	-13.90	-1020.22	-29.27	30.00	-3298.77	25.34	-3294.10	124.47
		206	98.36	33.12	-894.99	32.75	-894.61	18.62	13.21	-3529.30	-1.71	-3514.39	-229.35

Elem.	Cmb	Nodo	Von Mises	N max	N min	N 1	N 2	N 1-2	M max	M min	M 1	M 2	M 1-2
113	102	195	36.84	-8.59	-409.00	-12.20	-405.39	-37.82	73.65	-1099.89	65.45	-1091.70	97.71
		245	33.51	6.59	-286.45	6.45	-286.32	6.38	-5.35	-1272.01	-5.76	-1271.60	-22.86
		244	38.45	-6.38	-391.15	-6.48	-391.04	-6.37	10.34	-1266.65	9.29	-1265.59	36.67
		206	36.98	15.05	-309.28	14.83	-309.06	-8.48	30.93	-1393.25	30.72	-1393.04	-17.09
114	2	203	133.18	-34.03	-1635.12	-65.45	-1603.70	-222.08	229.35	-3732.47	92.08	-3595.20	724.55
		246	115.70	32.68	-922.32	31.15	-920.79	38.19	-11.02	-4600.07	-13.12	-4597.97	-98.22
		245	143.89	-31.79	-1513.41	-33.10	-1512.10	-43.92	55.28	-4593.80	45.57	-4584.09	212.24
		195	134.92	84.22	-1058.91	83.27	-1057.96	-32.90	-18.13	-5331.32	-26.24	-5323.21	-207.49
114	24	203	33.13	-11.96	-386.45	-17.78	-380.63	-46.33	83.33	-945.16	70.91	-932.74	112.36
		246	28.94	8.66	-223.91	8.47	-223.72	6.64	-9.15	-1174.36	-9.37	-1174.14	-15.94
		245	35.83	-9.13	-369.87	-9.28	-369.72	-7.39	13.02	-1166.89	11.63	-1165.49	40.54
		195	33.33	21.62	-246.85	20.28	-245.51	-18.91	23.88	-1354.04	23.86	-1354.02	5.04
114	56	203	33.00	-11.78	-384.28	-17.67	-378.39	-46.47	83.54	-943.38	71.44	-931.28	110.81
		246	28.76	8.99	-220.54	8.80	-220.36	6.48	-8.58	-1172.81	-8.85	-1172.54	-17.62
		245	35.64	-9.00	-366.52	-9.13	-366.40	-6.74	13.21	-1165.18	11.93	-1163.90	38.90
		195	33.19	21.45	-244.56	20.19	-243.31	-18.21	24.18	-1352.59	24.17	-1352.58	3.53
114	85	203	32.93	-11.67	-382.96	-17.60	-377.02	-46.56	83.66	-942.26	71.76	-930.36	109.85
		246	28.65	9.18	-218.50	9.01	-218.32	6.38	-8.23	-1171.82	-8.53	-1171.52	-18.65
		245	35.53	-8.92	-364.49	-9.03	-364.38	-6.34	13.33	-1164.10	12.11	-1162.88	37.90
		195	33.11	21.34	-243.16	20.14	-241.96	-17.78	24.37	-1351.67	24.37	-1351.66	2.60
114	87	203	93.17	-24.25	-1141.13	-45.98	-1119.40	-154.26	163.23	-2613.13	70.95	-2520.85	497.68
		246	80.95	23.01	-644.01	21.97	-642.97	26.31	-8.45	-3222.95	-9.89	-3221.52	-67.97
		245	100.67	-22.39	-1057.53	-23.27	-1056.65	-30.12	38.61	-3217.72	32.00	-3211.11	146.55
		195	94.36	58.94	-738.31	58.20	-737.57	-24.30	-9.13	-3734.14	-14.25	-3729.03	-137.98
114	97	203	88.37	-23.43	-1079.41	-43.79	-1059.05	-145.21	159.55	-2479.59	75.64	-2395.68	463.02
		246	76.78	21.96	-609.50	21.00	-608.54	24.55	-8.72	-3061.03	-10.07	-3059.68	-64.10
		245	95.46	-21.38	-1001.64	-22.18	-1000.84	-27.98	36.58	-3055.26	30.46	-3049.13	137.51
		195	89.47	55.92	-697.70	55.14	-696.92	-24.31	-3.19	-3545.02	-7.52	-3540.69	-123.78
114	102	203	32.93	-11.67	-382.96	-17.60	-377.02	-46.56	83.66	-942.26	71.76	-930.36	109.85
		246	28.65	9.18	-218.50	9.01	-218.32	6.38	-8.23	-1171.82	-8.53	-1171.52	-18.65
		245	35.53	-8.92	-364.49	-9.03	-364.38	-6.34	13.33	-1164.10	12.11	-1162.88	37.90
		195	33.11	21.34	-243.16	20.14	-241.96	-17.78	24.37	-1351.67	24.37	-1351.66	2.60
115	2	197	107.77	-56.78	-1463.12	-97.89	-1422.00	-236.92	376.14	-2683.55	198.87	-2506.29	714.80
		247	86.59	43.80	-558.84	42.80	-557.85	24.46	-46.97	-3865.15	-47.50	-3864.63	-44.66
		246	127.70	-42.21	-1375.62	-42.93	-1374.90	-31.09	79.17	-3976.40	68.54	-3965.77	207.34
		203	112.65	124.66	-676.89	108.15	-660.38	-113.85	-58.24	-5126.18	-58.27	-5126.15	11.00
115	24	197	27.87	-13.86	-344.53	-23.17	-335.22	-54.71	93.40	-756.89	75.31	-738.80	122.70
		247	22.77	11.17	-139.53	10.89	-139.25	6.48	-12.10	-1041.40	-12.22	-1041.28	-10.88
		246	31.57	-11.47	-326.06	-11.64	-325.89	-7.26	15.61	-1031.83	13.99	-1030.22	41.12
		203	28.12	29.64	-165.55	25.51	-161.42	-28.09	18.52	-1280.02	17.98	-1279.48	26.54
115	56	197	27.79	-13.64	-343.20	-23.03	-333.82	-54.82	93.85	-754.73	76.18	-737.06	121.17
		247	22.64	11.49	-137.27	11.21	-137.00	6.41	-11.24	-1039.41	-11.39	-1039.26	-12.50
		246	31.43	-11.40	-323.82	-11.54	-323.68	-6.63	15.87	-1029.60	14.38	-1028.11	39.43
		203	28.03	29.38	-164.03	25.42	-160.06	-27.41	18.90	-1278.13	18.42	-1277.65	24.97
115	85	197	27.74	-13.51	-342.40	-22.94	-332.97	-54.88	94.12	-753.39	76.71	-735.98	120.22
		247	22.56	11.68	-135.90	11.40	-135.62	6.36	-10.71	-1038.18	-10.89	-1038.01	-13.52
		246	31.35	-11.35	-322.45	-11.47	-322.33	-6.25	16.03	-1028.22	14.62	-1026.80	38.39
		203	27.97	29.23	-163.10	25.37	-159.23	-26.99	19.14	-1276.96	18.70	-1276.52	23.99
115	87	197	75.54	-39.66	-1021.06	-68.32	-992.40	-165.26	262.25	-1888.43	142.81	-1768.99	492.56
		247	60.73	30.75	-390.68	30.05	-389.98	17.15	-32.74	-2715.19	-33.12	-2714.82	-31.58
		246	89.32	-29.65	-960.08	-30.15	-959.58	-21.56	54.89	-2788.00	47.64	-2780.76	143.35
		203	78.83	87.01	-473.01	75.48	-461.48	-79.50	-36.32	-3587.67	-36.35	-3587.64	10.53
115	97	197	71.79	-37.54	-965.81	-64.63	-938.72	-156.24	249.86	-1801.29	140.98	-1692.41	459.85
		247	57.75	29.28	-370.21	28.61	-369.54	16.31	-30.92	-2585.76	-31.29	-2585.39	-30.63
		246	84.67	-28.24	-908.19	-28.71	-907.72	-20.26	51.61	-2649.93	44.88	-2643.20	134.70
		203	74.78	82.31	-448.02	71.41	-437.12	-75.24	-28.14	-3403.21	-28.19	-3403.16	12.81
115	102	197	27.74	-13.51	-342.40	-22.94	-332.97	-54.88	94.12	-753.39	76.71	-735.98	120.22
		247	22.56	11.68	-135.90	11.40	-135.62	6.36	-10.71	-1038.18	-10.89	-1038.01	-13.52
		246	31.35	-11.35	-322.45	-11.47	-322.33	-6.25	16.03	-1028.22	14.62	-1026.80	38.39
		203	27.97	29.23	-163.10	25.37	-159.23	-26.99	19.14	-1276.96	18.70	-1276.52	23.99
116	2	209	79.51	-68.89	-1177.58	-118.60	-1127.88	-229.42	375.24	-1866.77	160.14	-1651.68	660.29
		248	56.98	52.82	-184.10	52.25	-183.53	11.58	-29.01	-3111.02	-29.21	-3110.83	24.39
		247	101.53	-51.15	-1125.37	-51.41	-1125.11	-16.73	52.20	-3090.95	39.92	-3078.67	196.11
		197	82.30	191.56	-311.75	121.60	-241.79	-174.12	64.27	-4419.60	51.28	-4406.61	240.98
116	24	209	21.38	-13.18	-289.34	-28.29	-274.23	-62.81	104.73	-540.33	77.20	-512.81	130.38
		248	15.40	13.41	-41.84	12.66	-41.08	6.41	-13.93	-875.15	-13.96	-875.12	-4.35
		247	26.08	-13.35	-267.29	-13.54	-267.10	-6.92	17.18	-864.53	15.31	-862.67	40.46
		197	21.70	43.55	-75.64	30.51	-62.60	-37.20	15.20	-1173.77	13.04	-1171.61	50.63
116	56	209	21.31	-13.08	-288.46	-28.13	-273.40	-62.61	105.30	-537.32	78.28	-510.30	128.97
		248	15.32	13.68	-40.70	12.94	-39.96	6.28	-12.92	-872.21	-12.96	-872.17	-5.82
		247	25.99	-13.33	-266.17	-13.49	-266.01	-6.37	17.76	-861.37	16.04	-859.64	38.90
		197	21.62	43.18	-74.52	30.42	-61.76	-36.59	15.89	-1171.07	13.85	-1169.03	49.14
116	85	209	21.27	-13.01	-287.91	-28.03	-272.89	-62.48	105.63	-535.46	78.93	-508.76	128.07
		248	15.26	13.84	-40.00	13.11	-39.28	6.20	-12.30	-870.42	-12.35	-870.37	-6.74
		247	25.93	-13.31	-265.49	-13.46	-265.35	-6.03	18.12	-859.44	16.48	-857.79	37.93

Elem.	Cmb	Nodo	Von Mises	N max	N min	N 1	N 2	N 1-2	M max	M min	M 1	M 2	M 1-2
		197	21.58	42.96	-73.84	30.38	-61.25	-36.22	16.31	-1169.42	14.35	-1167.45	48.20
116	87	209	55.84	-47.68	-823.42	-82.80	-788.30	-161.28	263.28	-1314.95	117.29	-1168.95	457.27
		248	40.02	37.02	-128.03	36.58	-127.59	8.55	-21.01	-2190.04	-21.12	-2189.94	15.36
		247	71.14	-35.88	-785.64	-36.07	-785.45	-11.96	37.18	-2175.19	28.81	-2166.82	135.80
		197	57.74	133.40	-217.65	85.12	-169.36	-120.91	45.00	-3102.30	36.10	-3093.40	167.08
116	97	209	53.16	-44.71	-780.46	-78.36	-746.81	-153.70	252.38	-1255.38	118.29	-1121.30	429.17
		248	38.11	35.19	-120.68	34.72	-120.21	8.54	-20.61	-2090.13	-20.69	-2090.06	12.55
		247	67.58	-34.11	-743.40	-34.30	-743.21	-11.59	35.95	-2075.30	28.18	-2067.53	127.85
		197	54.93	125.91	-205.95	80.76	-160.80	-113.77	44.68	-2951.68	36.43	-2943.42	157.04
116	102	209	21.27	-13.01	-287.91	-28.03	-272.89	-62.48	105.63	-535.46	78.93	-508.76	128.07
		248	15.26	13.84	-40.00	13.11	-39.28	6.20	-12.30	-870.42	-12.35	-870.37	-6.74
		247	25.93	-13.31	-265.49	-13.46	-265.35	-6.03	18.12	-859.44	16.48	-857.79	37.93
		197	21.58	42.96	-73.84	30.38	-61.25	-36.22	16.31	-1169.42	14.35	-1167.45	48.20
117	2	207	49.00	-55.45	-860.22	-126.36	-789.32	-228.11	422.86	-1053.29	128.45	-758.89	589.84
		249	42.91	193.48	48.63	48.87	193.24	5.93	-16.15	-2304.66	-19.88	-2300.93	92.34
		248	73.40	-52.64	-808.21	-52.78	-808.08	-10.21	46.42	-2276.14	34.03	-2263.74	169.20
		209	67.15	344.99	-54.65	129.20	161.14	-199.18	119.38	-3738.41	72.50	-3691.52	422.71
117	30	207	13.69	-8.28	-221.30	-31.94	-197.64	-66.94	122.13	-296.87	78.05	-252.79	128.56
		249	12.97	66.23	11.62	12.19	65.66	5.54	-10.23	-669.64	-10.23	-669.64	0.62
		248	19.53	-13.40	-196.32	-13.52	-196.21	-4.54	17.25	-663.73	15.58	-662.06	33.68
		209	18.10	87.43	-4.62	34.42	48.39	-45.49	16.20	-1033.50	10.77	-1028.07	75.31
117	62	207	13.55	-8.04	-220.12	-32.13	-196.03	-67.29	122.28	-295.16	76.86	-249.74	129.99
		249	12.99	67.68	11.50	11.99	67.19	5.24	-11.33	-666.18	-11.33	-666.18	2.08
		248	19.41	-13.31	-194.76	-13.44	-194.63	-4.90	18.30	-660.37	16.48	-658.55	35.12
		209	18.16	88.84	-4.29	34.50	50.05	-45.91	17.40	-1030.61	11.76	-1024.97	76.69
117	85	207	13.47	-7.89	-219.40	-32.25	-195.04	-67.51	122.42	-294.15	76.14	-247.88	130.91
		249	13.00	68.57	11.42	11.87	68.12	5.06	-11.99	-664.08	-12.00	-664.06	3.01
		248	19.33	-13.25	-193.82	-13.40	-193.67	-5.12	18.94	-658.33	17.02	-656.41	36.04
		209	18.20	89.70	-4.09	34.55	51.06	-46.17	18.13	-1028.86	12.35	-1023.08	77.57
117	87	207	34.45	-38.07	-602.68	-88.54	-552.22	-161.07	297.43	-740.62	95.79	-538.98	410.68
		249	30.34	138.12	33.96	34.16	137.91	4.63	-12.47	-1624.88	-14.86	-1622.50	61.96
		248	51.51	-36.87	-564.65	-36.97	-564.54	-7.49	33.44	-1605.17	24.96	-1596.68	117.61
		209	47.18	241.92	-36.95	90.74	114.23	-138.94	81.83	-2629.28	49.98	-2597.43	292.15
117	97	207	32.85	-35.40	-572.39	-84.10	-523.69	-154.20	285.40	-705.51	98.52	-518.63	387.63
		249	29.08	133.67	32.14	32.37	133.43	4.86	-12.97	-1553.17	-14.99	-1551.14	55.84
		248	49.01	-35.00	-534.70	-35.11	-534.59	-7.44	32.71	-1534.79	24.78	-1526.86	111.22
		209	44.95	229.98	-33.79	86.39	109.80	-131.36	77.98	-2506.60	48.67	-2477.29	273.66
117	102	207	13.47	-7.89	-219.40	-32.25	-195.04	-67.51	122.42	-294.15	76.14	-247.88	130.91
		249	13.00	68.57	11.42	11.87	68.12	5.06	-11.99	-664.08	-12.00	-664.06	3.01
		248	19.33	-13.25	-193.82	-13.40	-193.67	-5.12	18.94	-658.33	17.02	-656.41	36.04
		209	18.20	89.70	-4.09	34.55	51.06	-46.17	18.13	-1028.86	12.35	-1023.08	77.57
118	2	193	34.69	-25.96	-491.78	-121.84	-395.90	-188.33	603.05	-309.87	73.66	219.53	450.60
		250	47.68	551.14	9.31	9.88	550.57	-17.63	15.46	-1360.38	-7.87	-1337.05	177.64
		249	44.07	-26.44	-461.72	-26.51	-461.65	5.44	35.39	-1431.20	24.08	-1419.88	128.34
		207	79.08	671.34	25.11	124.75	571.71	-233.36	233.94	-3039.16	105.69	-2910.91	635.07
118	31	193	9.42	4.31	-125.79	-33.11	-88.37	-58.89	183.14	-56.60	66.60	59.93	119.82
		250	14.78	180.84	-0.09	-0.03	180.78	-3.36	-11.61	-388.57	-12.84	-387.34	21.50
		249	11.37	-5.26	-101.61	-5.26	-101.60	-0.56	20.98	-419.41	18.40	-416.82	33.65
		207	22.34	201.57	12.09	35.06	178.60	-61.85	30.83	-847.92	14.14	-831.24	119.94
118	63	193	9.38	3.21	-127.22	-33.02	-90.99	-58.42	180.25	-56.22	67.60	56.43	118.10
		250	14.70	177.99	-0.03	0.02	177.94	-2.92	-10.93	-392.47	-11.95	-391.45	19.70
		249	11.56	-5.37	-104.47	-5.37	-104.47	-0.27	19.72	-423.24	17.38	-420.91	32.07
		207	22.24	199.04	11.92	35.00	175.96	-61.53	29.24	-850.96	13.01	-834.72	118.43
118	85	193	9.35	2.55	-128.10	-32.97	-92.58	-58.13	178.46	-55.96	68.21	54.29	117.01
		250	14.65	176.25	3.25e-03	0.04	176.21	-2.65	-10.52	-394.85	-11.42	-393.95	18.56
		249	11.68	-5.44	-106.21	-5.44	-106.21	-0.10	18.95	-425.58	16.77	-423.40	31.07
		207	22.17	197.50	11.81	34.96	174.36	-61.34	28.27	-852.80	12.32	-836.85	117.47
118	87	193	24.36	-17.07	-344.83	-85.62	-276.28	-133.30	425.47	-213.68	58.20	153.59	316.00
		250	33.73	390.92	6.21	6.60	390.54	-12.11	8.58	-959.24	-6.77	-943.89	120.90
		249	30.94	-18.35	-321.97	-18.40	-321.93	3.61	26.11	-1010.86	18.29	-1003.04	89.70
		207	55.66	473.85	18.36	87.83	404.39	-163.75	159.27	-2139.35	72.11	-2052.19	439.04
118	97	193	23.19	-15.11	-327.79	-81.58	-261.33	-127.92	408.10	-198.53	63.55	146.02	300.50
		250	32.36	375.92	5.60	5.94	375.58	-11.26	5.94	-917.00	-7.62	-903.44	111.05
		249	29.44	-17.27	-304.31	-17.30	-304.28	3.24	26.12	-968.10	18.73	-960.71	85.42
		207	53.13	453.45	18.19	83.83	387.81	-155.77	148.83	-2041.31	68.62	-1961.10	411.40
118	102	193	9.35	2.55	-128.10	-32.97	-92.58	-58.13	178.46	-55.96	68.21	54.29	117.01
		250	14.65	176.25	3.25e-03	0.04	176.21	-2.65	-10.52	-394.85	-11.42	-393.95	18.56
		249	11.68	-5.44	-106.21	-5.44	-106.21	-0.10	18.95	-425.58	16.77	-423.40	31.07
		207	22.17	197.50	11.81	34.96	174.36	-61.34	28.27	-852.80	12.32	-836.85	117.47
119	2	202	30.25	189.40	-86.68	-56.89	159.62	85.65	1576.46	523.92	524.21	1576.18	-17.38
		251	45.97	754.69	-129.06	-101.92	727.55	-152.47	368.87	-249.45	-179.22	298.65	196.19
		250	16.85	117.04	-115.74	68.24	-66.93	94.76	126.69	-483.34	122.71	-479.36	49.10
		193	93.81	1073.04	-69.56	57.27	946.21	-358.93	374.36	-2355.99	-3.26	-1978.37	942.57
119	27	202	10.47	81.87	-23.39	-15.41	73.89	27.86	491.07	208.07	209.09	490.04	16.97
		251	15.35	244.10	-44.06	-36.48	236.51	-46.14	105.04	-66.65	-64.11	102.49	20.75

Elem.	Cmb	Nodo	Von Mises	N max	N min	N 1	N 2	N 1-2	M max	M min	M 1	M 2	M 1-2
		250	4.28	46.76	-12.28	24.41	10.07	28.64	52.51	-138.54	50.42	-136.46	19.85
		193	26.92	333.90	-20.52	14.90	298.48	-106.30	21.81	-635.12	-35.80	-577.51	185.81
119	59	202	10.20	78.63	-22.92	-14.41	70.12	28.14	485.98	207.58	208.37	485.19	14.84
		251	15.08	240.68	-43.17	-35.44	232.94	-46.22	98.84	-67.06	-64.96	96.74	18.53
		250	4.41	45.41	-14.91	24.25	6.26	28.79	51.37	-143.66	49.71	-142.00	17.89
		193	26.77	330.00	-20.85	14.69	294.47	-105.85	21.12	-638.16	-34.86	-582.17	183.78
119	85	202	10.04	76.68	-22.66	-13.80	67.83	28.30	482.89	207.27	207.93	482.23	13.51
		251	14.92	238.60	-42.63	-34.80	230.77	-46.27	95.08	-67.32	-65.49	93.25	17.15
		250	4.49	44.64	-16.55	24.15	3.95	28.88	50.70	-146.79	49.28	-145.37	16.66
		193	26.68	327.63	-21.05	14.55	292.03	-105.58	20.69	-640.00	-34.30	-585.01	182.50
119	87	202	21.50	136.48	-60.79	-39.77	115.45	60.87	1115.21	377.07	377.20	1115.08	-9.79
		251	32.64	534.94	-91.72	-72.59	515.80	-107.81	257.45	-174.14	-128.22	211.53	133.08
		250	11.82	83.83	-79.21	48.71	-44.10	67.02	91.22	-341.80	88.38	-338.96	34.95
		193	66.08	759.03	-49.17	40.12	669.74	-253.36	251.68	-1655.34	-6.75	-1396.91	652.71
119	97	202	20.72	133.30	-57.82	-37.70	113.18	58.65	1069.99	369.70	369.77	1069.92	-6.95
		251	31.41	514.06	-88.38	-70.09	495.77	-103.36	243.55	-164.66	-124.32	203.21	121.83
		250	11.25	81.40	-73.43	47.14	-39.17	64.27	89.07	-327.83	86.25	-325.01	34.17
		193	63.12	727.95	-47.11	38.11	642.73	-242.46	230.81	-1576.36	-8.67	-1336.88	612.72
119	102	202	10.04	76.68	-22.66	-13.80	67.83	28.30	482.89	207.27	207.93	482.23	13.51
		251	14.92	238.60	-42.63	-34.80	230.77	-46.27	95.08	-67.32	-65.49	93.25	17.15
		250	4.49	44.64	-16.55	24.15	3.95	28.88	50.70	-146.79	49.28	-145.37	16.66
		193	26.68	327.63	-21.05	14.55	292.03	-105.58	20.69	-640.00	-34.30	-585.01	182.50
120	2	201	180.82	2957.48	-196.41	513.36	2247.71	1317.10	2118.83	152.24	249.53	2021.55	426.44
		252	59.61	76.48	-1046.93	-124.85	-845.61	-430.86	-21.08	-365.36	-63.63	-322.81	-113.30
		251	65.72	911.97	-141.37	180.75	589.86	485.32	1419.81	-34.60	-16.81	1402.03	159.83
		202	108.35	1167.26	-928.66	-580.81	819.40	-779.79	1202.10	-154.56	934.07	113.47	540.17
120	23	201	60.30	964.32	-58.02	173.64	732.65	427.98	730.50	-4.78	69.29	656.43	221.31
		252	19.03	19.23	-330.01	-39.64	-271.14	-130.74	5.39	-132.82	-24.32	-103.11	-56.77
		251	21.52	300.55	-38.65	56.79	205.12	152.52	445.83	-5.54	3.70	436.59	63.94
		202	31.07	368.63	-297.38	-191.57	262.82	-243.46	241.22	39.83	238.12	42.93	24.78
120	55	201	59.79	955.64	-58.34	171.63	725.66	424.62	726.14	-1.39	72.63	652.13	219.93
		252	19.30	20.29	-333.54	-40.56	-272.68	-133.53	8.57	-135.19	-20.71	-105.91	-57.89
		251	21.47	301.14	-38.74	58.33	204.07	153.52	442.07	-6.07	2.85	433.15	62.61
		202	30.90	362.89	-297.68	-191.11	256.32	-242.98	240.70	34.43	237.16	37.97	26.80
120	85	201	59.48	950.37	-58.54	170.41	721.42	422.58	723.48	0.71	74.67	649.51	219.06
		252	19.46	20.95	-335.70	-41.13	-273.62	-135.22	10.55	-136.67	-18.50	-107.61	-58.60
		251	21.44	301.50	-38.81	59.26	203.43	154.13	439.78	-6.39	2.33	431.05	61.78
		202	30.80	359.41	-297.87	-190.83	252.37	-242.69	240.40	31.13	236.57	34.96	28.04
120	87	201	128.47	2098.37	-138.74	364.96	1594.66	934.41	1508.10	102.51	176.31	1434.30	313.50
		252	42.34	53.78	-742.71	-88.72	-600.22	-305.27	-12.83	-261.61	-44.89	-229.56	-83.35
		251	46.67	648.17	-99.40	128.40	420.36	344.10	1005.13	-23.87	-10.90	992.16	114.79
		202	76.33	826.09	-658.82	-412.65	579.92	-552.22	830.69	-96.12	654.26	80.31	363.85
120	97	201	123.75	2018.55	-132.86	351.76	1533.93	898.76	1455.50	95.30	171.01	1379.79	311.85
		252	40.77	51.27	-714.40	-85.47	-577.66	-293.26	-9.74	-253.79	-42.97	-220.57	-83.69
		251	44.94	624.55	-94.78	123.67	406.10	330.79	964.68	-22.44	-9.49	951.73	112.31
		202	72.92	792.67	-633.65	-397.46	556.48	-530.19	780.04	-78.99	623.37	77.67	331.72
120	102	201	59.48	950.37	-58.54	170.41	721.42	422.58	723.48	0.71	74.67	649.51	219.06
		252	19.46	20.95	-335.70	-41.13	-273.62	-135.22	10.55	-136.67	-18.50	-107.61	-58.60
		251	21.44	301.50	-38.81	59.26	203.43	154.13	439.78	-6.39	2.33	431.05	61.78
		202	30.80	359.41	-297.87	-190.83	252.37	-242.69	240.40	31.13	236.57	34.96	28.04
Elem.			**Von Mises**	**N max**	**N min**	**N 1**	**N 2**	**N 1-2**	**M max**	**M min**	**M 1**	**M 2**	**M 1-2**
					-1656.66	-690.77	-1639.35	-1635.28		-5331.32	-1054.02	-5323.21	-1008.57
			204.60	3404.77		638.95	2613.20	1639.96	2415.69		2122.74	2023.41	1010.15